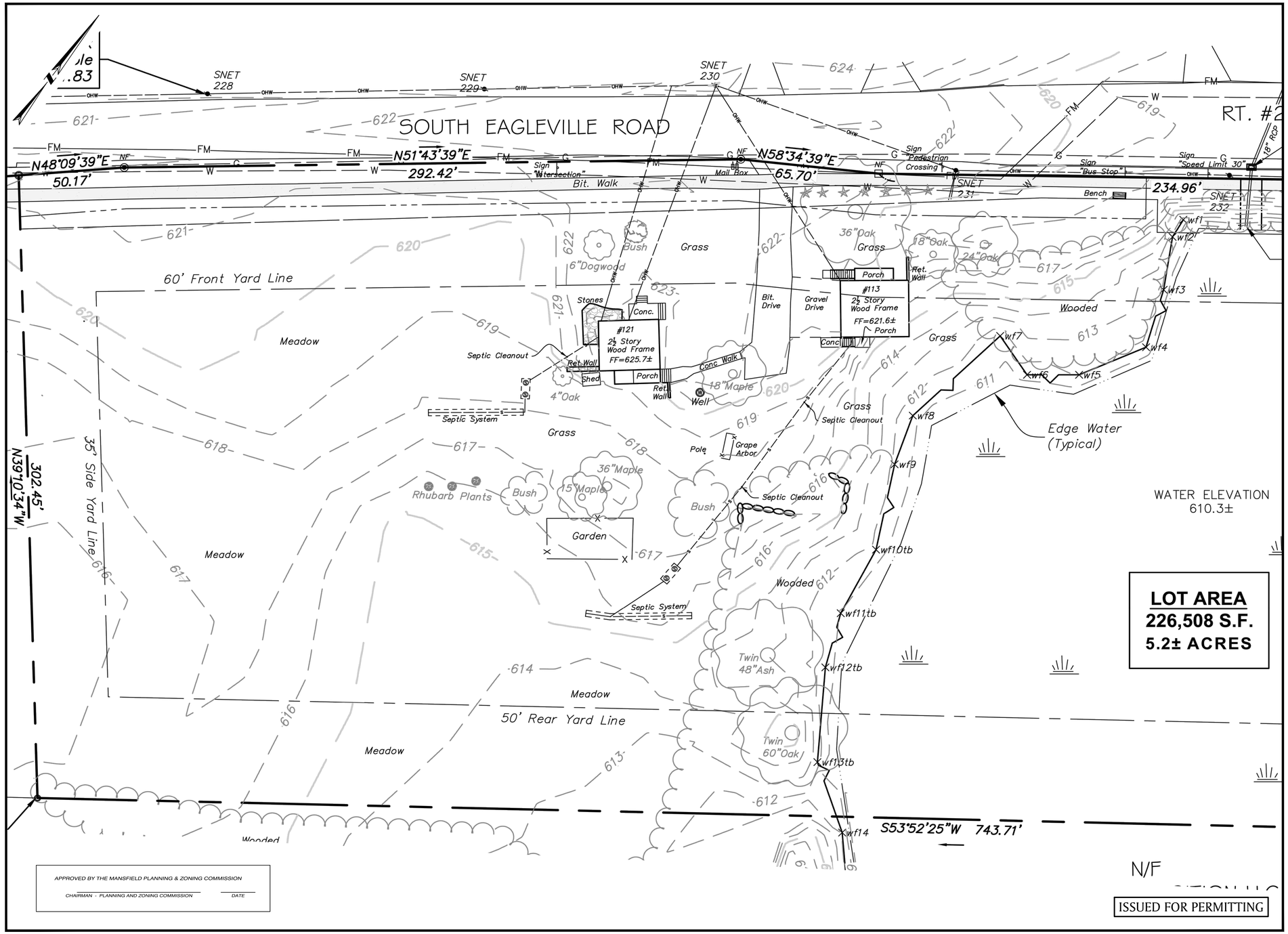

EAGLEVILLE GREEN

113-121 SOUTH EAGLEVILLE ROAD
IN
MANSFIELD
CONNECTICUT

EXISTING CONDITIONS PLAN

NOVEMBER 25, 2019

REVISIONS:

1	01/20/2020	PER TOWN COMMENTS
2	01/31/2020	PER TOWN COMMENTS
3	02/12/2020	PER TEST PIT RESULTS

PREPARED FOR:
MANSFIELD HOUSING DEV. CORP.
309 MAPLE ROAD
STORRS, CT 06268

BSC GROUP
300 Winding Brook Drive
Glastonbury, Connecticut 06033
860 652 8227

© 2019 BSC GROUP, INC.

SCALE: 1" = 20'
0 10 20 40 FEET

FILE: 8374900-EC.DWG
DWG. NO:
JOB. NO: 83749.00

EC-1.0

EAGLEVILLE GREEN - NOVEMBER 25, 2019

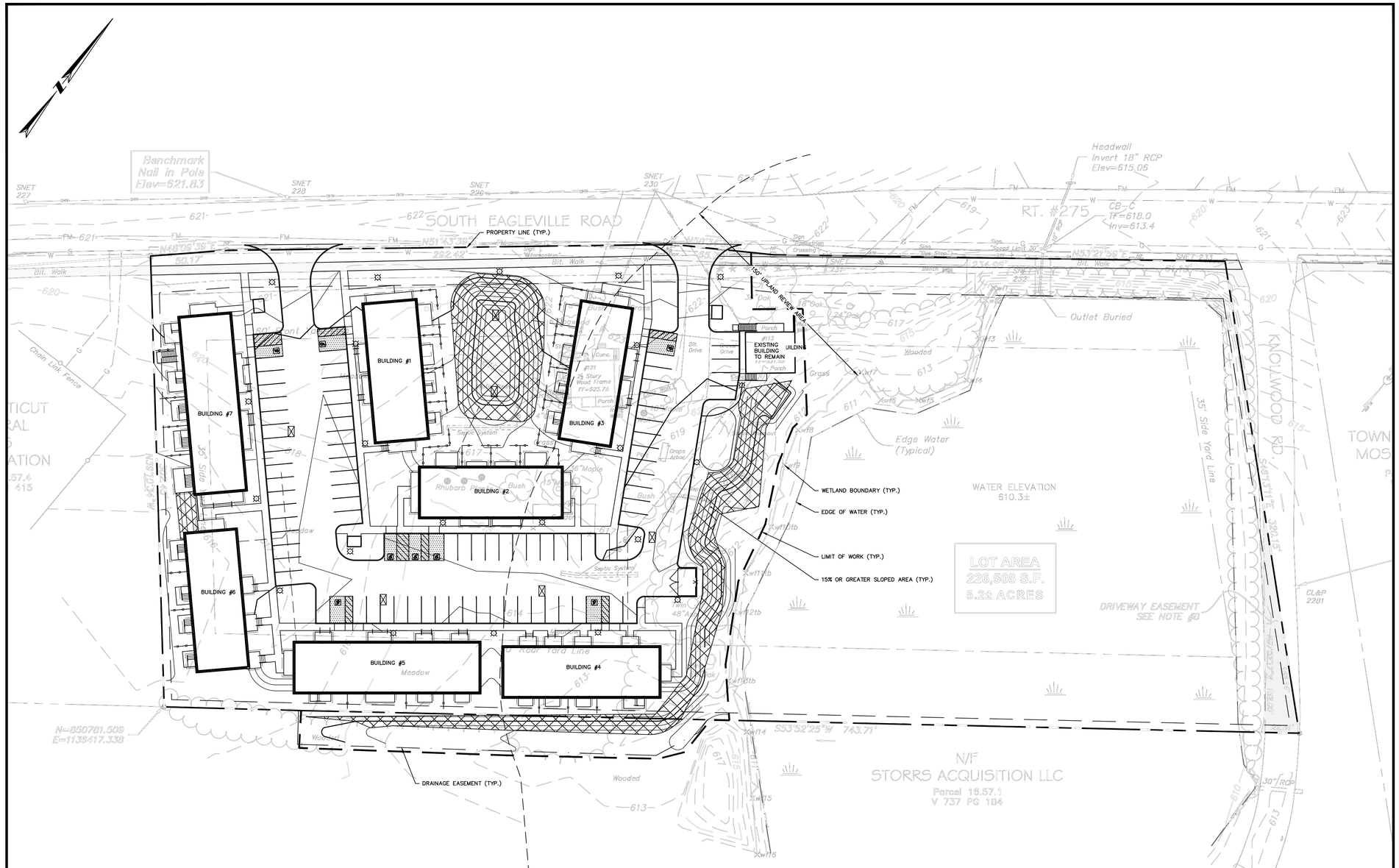

PROPOSED STEEP SLOPES-15% OR GREATER = 0.25 ACRES
WETLAND AREA = 1.75 ACRES
EARTHWORK FILL = 6,868 CUBIC YARDS
EARTHWORK CUT = 591 CUBIC YARDS
NET EARTHWORK = 6,277 CUBIC YARDS

APPROVED BY THE MANSFIELD PLANNING & ZONING COMMISSION

CHAIRMAN - PLANNING AND ZONING COMMISSION _____ DATE _____

ISSUED FOR PERMITTING

EAGLEVILLE GREEN - NOVEMBER 25, 2019

STATE OF CONNECTICUT · ROBERT S. NEWTON · No. 20662 · LICENSED PROFESSIONAL ENGINEER

ROBERT NEWTON, PE No. 20662

EAGLEVILLE GREEN

113-121 SOUTH EAGLEVILLE ROAD
IN
MANSFIELD
CONNECTICUT

OVERALL SITE IMPROVEMENTS

NOVEMBER 25, 2019

REVISIONS:

1	01/20/2020	PER TOWN COMMENTS
2	01/31/2020	PER TOWN COMMENTS
3	02/12/2020	PER TEST PIT RESULTS

PREPARED FOR:
MANSFIELD HOUSING DEV. CORP.
309 MAPLE ROAD
STORRS, CT 06268

BSC GROUP
300 Winding Brook Drive
Glastonbury, Connecticut 06033
860 652 8227

© 2019 BSC GROUP, INC.

SCALE: 1" = 30'
0 15 30 60 FEET

FILE: 8374900-SITE.DWG
DWG. NO: OV-1.0
JOB. NO: 83749.00

EROSION AND SEDIMENTATION CONTROL NOTES:

1. DO NOT PROCEED WITH THE WORK UNTIL ALL E&S CONTROL MEASURES ARE IN-PLACE AND HAVE BEEN INSPECTED AND APPROVED BY THE ENGINEER.
2. THE MEASURES SPECIFIED ARE THE MINIMUM REQUIREMENTS FOR E&S CONTROL AND ARE SHOWN IN GENERAL SIZE AND LOCATION ONLY. THE CONTRACTOR SHALL BE RESPONSIBLE FOR ENSURING THAT ALL E&S CONTROL MEASURES ARE CONFIGURED AND CONSTRUCTED IN A MANNER THAT WILL MINIMIZE EROSION OF SOILS AND PREVENT THE TRANSPORT OF SEDIMENTS AND OTHER POLLUTANTS TO ANY RESOURCE AREAS. PROVIDE ADDITIONAL E&S MEASURES AS REQUIRED TO CONTROL EROSION AND SILTATION THROUGHOUT THE DURATION OF THE CONSTRUCTION AS CONDITIONS DICTATE AND/OR AS DIRECTED BY THE OWNER OR THE ENGINEER.
3. MONITOR AND INSPECT ALL E&S MEASURES IN AN ONGOING MANNER THROUGHOUT THE WORK AND TAKE CORRECTIVE MEASURES, AS REQUIRED, TO MINIMIZE EROSION OF SOILS AND PREVENT THE TRANSPORT OF SEDIMENTS AND OTHER POLLUTANTS TO ANY RESOURCE AREAS.
4. ANY EROSION AND SEDIMENTATION MEASURE IMPLEMENTED BEYOND THAT SHOWN SHALL CONFORM TO APPLICABLE SECTIONS OF THE STATE OF CONNECTICUT'S 2002 "CONNECTICUT GUIDELINES FOR SOIL EROSION AND SEDIMENT CONTROL."
5. ANY STOCKPILED MATERIAL SHALL BE SUBJECT TO EROSION CONTROL MEASURES THAT INCLUDE A MINIMUM OF SILT FENCE OR HAY BALE BARRIER. COVER STOCKPILES IF SIGNIFICANT RAINFALL IS PREDICTED.
6. PROVIDE TEMPORARY SEEDING WITH MULCH ON ALL EXPOSED SOIL AREAS WHERE WORK WILL BE SUSPENDED FOR LONGER THAN 30 DAYS. APPLY SEED AND MULCH WITHIN THE FIRST 7 DAYS OF SUSPENDING WORK. WHEN SEEDING IS NOT POSSIBLE DUE TO SEASONAL WEATHER CONDITIONS OR OTHER FACTORS, PROVIDE TEMPORARY STRUCTURAL SOIL PROTECTION SUCH AS MULCH, WOODCHIPS, EROSION CONTROL MATTING, OR COMPOST.
7. ALL TEMPORARY SLOPES IN EXCESS OF 3 (HORIZONTAL) TO 1 (VERTICAL) SHALL BE STABILIZED WITH EROSION CONTROL MATTING OR APPROVED EQUIVALENT.
8. NO RUNOFF SHALL BE ALLOWED TO ENTER ANY STORMWATER SYSTEM OR EXIT THE SITE PRIOR TO TREATMENT FOR SEDIMENT REMOVAL.
9. THE CONTRACTOR SHALL MAINTAIN A CLEAN CONSTRUCTION SITE AND SHALL NOT ALLOW THE ACCUMULATION OF RUBBISH OR CONSTRUCTION DEBRIS. ALL TRASH SHALL BE CLEANED ON A DAILY BASIS AND THE SITE SHALL BE LEFT IN A NEAT CONDITION AT THE END OF EACH WORK DAY.
10. TAKE ALL NECESSARY PRECAUTIONS TO AVOID THE SPILLAGE OF FUEL OR OTHER POLLUTANTS AND ADHERE TO ALL APPLICABLE POLICIES AND REGULATIONS RELATED TO SPILL PREVENTION, CONTROL, AND RESPONSE.
11. FOR DUST CONTROL, PERIODICALLY MOISTEN EXPOSED SOIL SURFACES WITH WATER AND MAINTAIN ADEQUATE MOISTURE LEVELS.
12. SWEEP ADJACENT ROADWAYS IF MUD OR SOIL IS TRACKED ON TO THEM, OR AS DIRECTED BY THE ENGINEER. SHOULD THE CONSTRUCTION ENTRANCE FAIL TO PREVENT THE TRACKING OF SOILS OR SEDIMENT OFF OF THE PROJECT SITE, A WASHING RACK SHALL BE INSTALLED ALONG WITH APPROPRIATE MEASURES TO COLLECT RESULTING WASTEWATER.
13. DRAINAGE STRUCTURE FILTER INSERTS SHALL BE INSTALLED AND CLEANED/CHANGED PER THE MANUFACTURER'S RECOMMENDATIONS. UNITS SHALL BE INSTALLED COMPLETELY AROUND INLETS OF EXISTING AND PROPOSED DRAINAGE STRUCTURES SUCH THAT NO RUNOFF IS ALLOWED TO ENTER DRAINAGE SYSTEMS WITHOUT FILTERING THROUGH THE DEVICE.

SUGGESTED CONSTRUCTION SEQUENCE:

1. CONDUCT A PRE-CONSTRUCTION MEETING WITH THE OWNER AND ENGINEER PRIOR TO ANY CONSTRUCTION ACTIVITY.
2. INSTALL CONSTRUCTION ENTRANCE(S) AND PLACE FILTER INSERTS IN EXISTING CATCH BASINS.
3. INSTALL PERIMETER E&S CONTROLS AND REQUEST PRE-CONSTRUCTION INSPECTION FROM THE ENGINEER.
4. FOLLOWING THE ENGINEER'S APPROVAL OF INSTALLED E&S CONTROLS, COMMENCE CONSTRUCTION OPERATIONS.
5. AT THE CONCLUSION OF CONSTRUCTION, COMPLETE THE INSTALLATION OF POST-CONSTRUCTION SITE STABILIZATION MEASURES AS SHOWN ON THE DRAWINGS.

NOTE: THE CONTRACTOR MAY MODIFY THE SUGGESTED CONSTRUCTION SEQUENCE INDICATED ABOVE, PROVIDED A REVISED SEQUENCE IS SUBMITTED FOR REVIEW AND APPROVED BY THE OWNER AND ENGINEER.

TEMPORARY E&S MEASURES MAINTENANCE SCHEDULE

E&S MEASURE	MAINTENANCE MEASURES	SCHEDULE
FILTER INSERTS IN DRAINAGE SYSTEM	CLEAN CATCH BASIN GRATE, REMOVE SEDIMENT/DEBRIS FROM FILTER INSERTS	WEEKLY & WITHIN 24 HOURS AFTER STORM GENERATING A DISCHARGE
TEMPORARY DIVERSION SWALES	REPAIR DAMAGED AREAS WITHIN 24 HRS OF OBSERVED FAILURE	WEEKLY & WITHIN 24 HOURS AFTER STORM GENERATING A DISCHARGE. INSPECT DAILY WHEN CONSTRUCTION ACTIVITIES ARE IN CLOSE PROXIMITY
HAY BALES/ SILT FENCE BARRIER	REPAIR/REPLACE WHEN FAILURE OBSERVED, REMOVE SILT WHEN ACCUMULATION REACHES APPROX. HALF HEIGHT OF BARRIER	WEEKLY & WITHIN 24 HOURS AFTER STORM GENERATING A DISCHARGE
TARP TEMPORARY STOCKPILES	ENSURE TARP IS SECURED OVER STOCKPILE AT THE END OF EACH DAY	DAILY
CONSTRUCTION ENTRANCE	SWEEP PAVED ROADWAY ADJACENT TO SITE ENTRANCE AS NECESSARY, REFRESH STONE AS NECESSARY, REMOVE SILTED GRAVEL	WEEKLY
MOISTEN EXPOSED SOILS	PERIODICALLY MOISTEN EXPOSED SOIL SURFACES WITH WATER ON UNPAVED TRAVELWAYS AND KEEP TRAVELWAYS DAMP	DAILY

PERCOLATION TEST RESULTS:

PERCOLATION TESTS PERFORMED ON 11/21/2019 BY BSC GROUP
SEE SHEET C-4.0 FOR LOCATIONS OF PERCOLATION TESTS

PT-A
DEPTH: ~30"
PRESOAK @ 11:30 AM
DRY @ 12:33 PM
BEGIN TEST @ 12:35 PM

TIME	DEPTH	CHANGE
12:35	9.5"	–
12:36	13.5"	4"
12:37	16.5"	3"
12:38	18.75"	2.25"
12:39	20.25"	1.5"
12:40	21.25"	1"
12:41	22.25"	1"
12:42	15.75"	REFILL
12:43	18"	2.25"
12:44	20"	2"
12:45	21.5"	1.5"
12:46	22.25"	0.75"
12:47	DRY	–

EFFECTIVE INFILTRATION RATE (FS=2) = 30 IN/HR

PT-B
DEPTH: ~30"
PRESOAK @ 12:00 PM
BEGIN TEST @ 2:00 PM

TIME	DEPTH	CHANGE
2:00	3"	–
2:05	5.25"	2.25"
2:10	7.25"	2"
2:15	8.75"	1.5"
2:20	10.25"	1.5"
2:25	11.50"	1.25"
2:30	12.50"	1"
2:35	13.50"	1"
2:40	14.50"	1"
2:45	15.50"	1"

EFFECTIVE INFILTRATION RATE (FS=2) = 6 IN/HR

PT-C
DEPTH: ~30"
PRESOAK @ 12:10 PM
DRY @ 12:54 PM
BEGIN TEST @ 1:00 PM

TIME	DEPTH	CHANGE
1:00	5.5"	–
1:01	7.25"	1.75"
1:02	8.25"	1"
1:03	9"	0.75"
1:04	9.75"	0.75"
1:06	11"	1.25"
1:08	12"	1"
1:10	13"	1"
1:12	14"	1"
1:14	14.75"	0.75"
1:16	15.50"	0.75"
1:18	16"	0.50"
1:20	16.5"	0.50"
1:22	17.25"	0.75"
1:24	DRY	–

EFFECTIVE INFILTRATION RATE (FS=2) =7.5 IN/HR

APPROVED BY THE MANSFIELD PLANNING & ZONING COMMISSION

CHAIRMAN - PLANNING AND ZONING COMMISSION ____________ *DATE* ____________

SITE PREPARATION NOTES:

1. CONTRACTOR SHALL NOTIFY "CALL BEFORE YOU DIG" (1-800-922-4455) AND VERIFY UTILITY MARK-OUT WITH THE OWNER PRIOR TO THE INITIATION OF ANY SITE DISTURBANCE.
2. THE CONTRACTOR IS SOLELY RESPONSIBLE FOR VERIFYING THE LOCATION AND NATURE OF ALL SUBSURFACE UTILITIES AT THE PROJECT WHICH MAY BE AFFECTED BY THE WORK. COORDINATE WITH RESPECTIVE UTILITY OWNERS AND PERFORM VERIFICATION OF TYPE, LOCATION AND INVERTS AS REQUIRED.
3. NOTIFY THE ENGINEER OF ANY AND ALL DISCREPANCIES BETWEEN EXISTING CONDITIONS AND THE CONTRACT DOCUMENTS BEFORE PROCEEDING WITH THAT PORTION OF THE WORK.
4. THE LOCATIONS OF EXISTING SITE FEATURES HAVE BEEN OBTAINED FROM MAPS, SURVEYS, FIELD INSPECTIONS, AND OTHER AVAILABLE INFORMATION. THEY MUST BE CONSIDERED APPROXIMATE BOTH TO LOCATION, SIZE, AND AS-BUILT CONDITION AND ARE PROVIDED FOR INFORMATIONAL PURPOSES ONLY. THE CONTRACTOR IS SOLELY RESPONSIBLE FOR DETERMINING ACTUAL FIELD CONDITIONS.
5. THE DIMENSIONS SHOWN ON THE PLANS, INCLUDING THE INTENDED DIMENSIONS OF THE WORK, MAY VARY FROM ACTUAL EXISTING CONDITIONS IN THE FIELD. THE CONTRACTOR SHALL TAKE APPROPRIATE MEASUREMENTS TO VERIFY ALL DIMENSIONS SHOWN ON THE DRAWINGS AS WELL AS OTHER DIMENSIONS HE MAY DEEM APPROPRIATE TO FACILITATE THE COMPLETION OF THE WORK. NOTIFY THE ENGINEER OF ANY DISCREPANCIES BETWEEN EXISTING CONDITIONS AND THE CONTRACT DOCUMENTS BEFORE PROCEEDING WITH THAT PORTION OF THE WORK.
6. IMPLEMENTING WORKER SAFETY AND/OR HEALTH PROTOCOLS THAT ADDRESS COMPLIANCE WITH RULES, LAWS, AND REGULATIONS PERTAINING TO CONSTRUCTION SAFETY AND/OR THE POTENTIAL AND/OR ACTUAL RISK OF EXPOSURE TO SITE-SPECIFIC PHYSICAL OR CHEMICAL HAZARDS IS SOLELY THE RESPONSIBILITY OF THE CONTRACTOR.
7. ALL CONSTRUCTION FENCING AND WARNING SIGNS SHALL BE INSTALLED PRIOR TO ANY CONSTRUCTION. INSTALL CONSTRUCTION FENCING AT THE LIMIT OF WORK.
8. PRIOR TO THE TERMINATION, ABANDONMENT, OR REMOVAL OF ANY UTILITY, VERIFY THAT APPLICABLE NOTIFICATIONS HAVE BEEN MADE TO THE UTILITY OWNER/OPERATOR AND THAT THE UTILITY HAS BEEN PROPERLY TERMINATED, CAPPED, OR PLUGGED AS REQUIRED.
9. PROTECT ALL IMPROVEMENTS NOT INCLUDED IN THE SCOPE OF SITE DEMOLITION. ANY IMPROVEMENT WHICH IS DAMAGED SHALL BE REPAIRED OR REPLACED IN-KIND TO THE OWNER'S SATISFACTION.
10. UNLESS OTHERWISE INDICATED, ALL DISTURBED AREAS SHALL BE RESTORED WITH SIX (6) INCHES OF LOAM, SEEDED, FERTILIZED, AND MULCHED. PROVIDE ADDITIONAL EROSION CONTROLS AS REQUIRED.
11. NO TOPSOIL IS TO BE REMOVED FROM THE SITE.

UTILITY NOTES:

1. CONTRACTOR SHALL NOTIFY "CALL BEFORE YOU DIG" (1-800-922-4455) AND VERIFY UTILITY MARK-OUT WITH THE OWNER PRIOR TO THE INITIATION OF ANY SITE DISTURBANCE.
2. THE LOCATIONS OF EXISTING UTILITIES AS SHOWN ON THE PLANS MAY VARY FROM ACTUAL EXISTING CONDITIONS IN THE FIELD. COORDINATE WITH RESPECTIVE UTILITY OWNERS AND PERFORM VERIFICATION OF TYPE, LOCATION AND INVERTS AS REQUIRED. VERIFY ALL TIE-IN POINTS, ROUTING, CONFLICTS, CROSSINGS, AND BUILDING CONNECTION POINTS TO FACILITATE THE COMPLETION OF THE WORK.
3. PERFORM EXPLORATORY EXCAVATIONS AS REQUIRED TO VERIFY THE AS-BUILT LOCATION OF EXISTING SUBSURFACE UTILITIES WHERE CROSSINGS OR OTHER POTENTIAL CONFLICTS ARE PRESENT.
4. NOTIFY THE ENGINEER OF ANY DISCREPANCIES BETWEEN EXISTING CONDITIONS AND THE CONTRACT DOCUMENTS BEFORE PROCEEDING WITH THAT PORTION OF THE WORK.
5. THE TOPS, RIMS, FRAMES, GRATES, AND COVERS (AS APPLICABLE) OF ALL UTILITY STRUCTURES THAT ARE TO REMAIN SHALL BE ADJUSTED TO MATCH FINAL GRADE IN A FLUSH CONDITION. ALL NEW UTILITY STRUCTURES SHALL BE INSTALLED WITH TOPS, RIMS, FRAMES, GRATES, AND COVERS (AS APPLICABLE) TO FINAL GRADE IN A FLUSH CONDITION.
6. ALL LIGHTING ELECTRICAL SUPPLIES SHALL BE INSTALLED IN MINIMUM 1-INCH PVC CONDUIT PER APPLICABLE SPECIFICATIONS. PLASTIC MARKING TAPE SHALL BE USED ON ALL CONDUIT RUNS.
7. THE ROUTING OF LIGHTING ELECTRICAL SUPPLIES SHOWN IS CONCEPTUAL. CONTRACTOR SHALL DETERMINE THE SPECIFIC ROUTING OF ALL LIGHTING SYSTEMS BASED ON THE ACTUAL LOCATION OF TIE-IN(S) TO EXISTING LIGHTING FEEDS AND AS REQUIRED TO AVOID CONFLICTS WITH OTHER CONSTRUCTION OR SUBSURFACE FACILITIES. PRIOR TO INSTALLATION, PROVIDE SHOP DRAWING SHOWING THE ROUTING OF ALL CONDUIT, LOCATIONS OF HANDHOLES, AND DETAILS OF TIE-INS TO EXISTING SYSTEM.
8. CONDUIT: RIGID PVC ELECTRICAL CONDUIT, NEMA TC 2 AND UL -651; FITTINGS AND CONDUIT BODIES: PVC TO MATCH CONDUIT, NEMA TC-3. PRIMER/SOLVENT CEMENT: ASTM F656/ASTM D2564; PULL ROPE: 3/8-INCH DOUBLE BRAIDED, LOW STRETCH POLYESTER COMPOSITE ROPE.
9. TRACER WIRE REQUIRED FOR TELECOMMUNICATIONS AND ELECTRIC ONLY. PROVIDE APPROPRIATE WIRE ACCESS POINTS.
10. ALL UNDERGROUND TELECOMMUNICATIONS AND ELECTRIC CONDUITS SHALL BE ENCASED IN CONCRETE EXCEPT BRANCH DISTRIBUTION FOR LIGHTING. WORK CONCRETE TO REMOVE ALL TRAPPED AIR AND INSURE EACH CONDUIT IS COMPLETELY SURROUNDED BY A MINIMUM 2" OF CONCRETE. ALLOW CONCRETE TO CURE FOR AT LEAST ONE HOUR BEFORE BACKFILLING.
11. FOR TELECOMMUNICATIONS AND ELECTRIC, WARNING TAPE SHALL BE INSTALLED 12-INCHES BELOW GRADE.
12. SEAL ALL CONDUIT ENDS WITH BLANK DUCT PLUGS. SECURE PULL ROPE TO DUCT PLUG.
13. ALL WORK ASSOCIATED WITH FIRE PROTECTION AND DOMESTIC WATER SHALL CONFORM TO THE STANDARDS AND SPECIFICATIONS OF THE LOCAL WATER UTILITY.
14. ALL WORK ASSOCIATED WITH ELECTRICAL SERVICE SHALL CONFORM TO THE STANDARDS OF EVERSOURCE. IF THERE ARE ANY CONFLICTS BETWEEN THE REQUIREMENTS INDICATED AND EVERSOURCE STANDARDS, EVERSOURCE STANDARDS SHALL PREVAIL.
15. ALL WORK ASSOCIATED WITH TELECOMMUNICATIONS SHALL CONFORM TO THE STANDARDS OF THE LOCAL PROVIDER.
16. INSTALL CONDUIT, PULL ROPE, CAPS, WARNING TAPE, AND TRACER WIRE PER APPLICABLE SPECIFICATIONS, STANDARDS, AND CODES.
17. ALTHOUGH NOT SHOWN ON THE DRAWINGS, PROVIDE FOR THE INSTALLATION OF ALL JOINTS, COUPLINGS, RESTRAINTS, BENDS, ANGLES, AND OTHER APPURTENANCES TO ACHIEVE A COMPLETE, FUNCTIONAL WATER SUPPLY SYSTEM.

LAYOUT AND MATERIALS NOTES:

1. NOTIFY "CALL BEFORE YOU DIG" (1-800-922-4455) AND VERIFY UTILITY MARK-OUT WITH THE OWNER PRIOR TO THE INITIATION OF ANY SITE DISTURBANCE.
2. THE CONTRACTOR IS SOLELY RESPONSIBLE FOR VERIFYING THE LOCATION AND NATURE OF ALL SUBSURFACE UTILITIES AT THE PROJECT WHICH MAY BE AFFECTED BY THE WORK. COORDINATE WITH RESPECTIVE UTILITY OWNERS AND PERFORM VERIFICATION OF TYPE, LOCATION AND INVERTS AS REQUIRED.
3. NOTIFY THE ENGINEER OF ANY AND ALL DISCREPANCIES BETWEEN EXISTING CONDITIONS AND THE CONTRACT DOCUMENTS BEFORE PROCEEDING WITH THAT PORTION OF THE WORK.
4. THE LOCATIONS OF EXISTING SITE FEATURES AS SHOWN HAVE BEEN OBTAINED FROM MAPS, SURVEYS, FIELD INSPECTIONS, AND OTHER AVAILABLE INFORMATION. THEY MUST BE CONSIDERED APPROXIMATE BOTH TO LOCATION, SIZE, AND AS-BUILT CONDITION AND ARE PROVIDED FOR INFORMATIONAL PURPOSES ONLY. THE CONTRACTOR IS SOLELY RESPONSIBLE FOR DETERMINING ACTUAL FIELD CONDITIONS.
5. THE DIMENSIONS SHOWN ON THE PLANS, INCLUDING THE INTENDED DIMENSIONS OF THE WORK, MAY VARY FROM ACTUAL EXISTING CONDITIONS IN THE FIELD. THE CONTRACTOR SHALL TAKE APPROPRIATE MEASUREMENTS TO VERIFY ALL DIMENSIONS SHOWN ON THE DRAWINGS AS WELL AS OTHER DIMENSIONS HE MAY DEEM APPROPRIATE TO FACILITATE THE COMPLETION OF THE WORK. NOTIFY THE ENGINEER OF ANY DISCREPANCIES BETWEEN EXISTING CONDITIONS AND THE CONTRACT DOCUMENTS BEFORE PROCEEDING WITH THAT PORTION OF THE WORK.
6. IMPLEMENTING WORKER SAFETY AND/OR HEALTH PROTOCOLS THAT ADDRESS COMPLIANCE WITH RULES, LAWS, AND REGULATIONS PERTAINING TO CONSTRUCTION SAFETY AND/OR THE POTENTIAL AND/OR ACTUAL RISK OF EXPOSURE TO SITE-SPECIFIC PHYSICAL OR CHEMICAL HAZARDS IS SOLELY THE RESPONSIBILITY OF THE CONTRACTOR.
7. ENGAGE A CONNECTICUT-LICENSED LAND SURVEYOR TO PERFORM LAND-SURVEYING SERVICES REQUIRED, INCLUDING, BUT NOT LIMITED TO VERIFICATION AND LAYOUT OF PROPOSED IMPROVEMENTS, DIMENSIONS, AND ELEVATIONS. REPORT DISCREPANCIES TO THE ENGINEER.
8. UNLESS OTHERWISE INDICATED, ALL DISTURBED AREAS SHALL BE RESTORED WITH SIX (6) INCHES OF LOAM, SEEDED, FERTILIZED, AND MULCHED. PROVIDE ADDITIONAL EROSION CONTROLS AS REQUIRED.
9. ALL CURBING IS BITUMINOUS CONCRETE UNLESS OTHERWISE INDICATED. WHERE CURBING IS CALLED-FOR ADJACENT TO SIDEWALKS, IT SHALL BE MONOLITHIC CONCRETE CURB AND SIDEWALK PER APPLICABLE DETAILS.
10. THE CROSS-SLOPE OF ANY SIDEWALK, WALKWAY, OR OTHER PEDESTRIAN SURFACE SHALL NOT BE STEEPER THAN 1:48 (2%).
11. ACCESSIBLE ROUTES SHALL COMPLY WITH CONNECTICUT BUILDING CODE. THE RUNNING SLOPE OF WALKING SURFACES SHALL NOT BE STEEPER THAN 1:20 (5%). THE CROSS SLOPE OF A WALKING SURFACE SHALL NOT BE STEEPER THAN 1:48 (2%).
12. RAMPS SHALL COMPLY WITH CT BUILDING CODE, REF. 2012 IBC SECTION 1010 AND ICC/ANSI A117.1 2009 CHAPTER 4, SECTION 405.
13. CONSTRUCTION JOINTS: REINFORCEMENT SHALL NOT CONTINUE THROUGH CONSTRUCTION JOINTS.
14. PRIOR TO INITIATION OF CONCRETE FLATWORK, SUBMIT PROPOSED CONSTRUCTION JOINT PLAN TO THE ENGINEER FOR REVIEW AND APPROVAL. COORDINATE SUCH PLAN WITH THE JOINT PATTERNS DEPICTED ON THE DRAWINGS.
15. UNLESS OTHERWISE SPECIFIED, MISCELLANEOUS CONCRETE PADS SHALL BE CONSTRUCTED PER SIDEWALK DETAIL.
16. ALL NON-ACCESSIBLE PARKING SPACES ARE 9' X 18'. VERIFY OVERALL LAYOUT DIMENSIONS BASED ON THESE DIMENSIONS AND THE NUMBER OF SPACES INDICATED. FIELD-ADJUST OVERALL LAYOUT DIMENSION IN CONCERT WITH THE ENGINEER IF REQUIRED.
17. DIMENSIONS INDICATED ARE TO FACE OF CURB, PAVEMENT EDGE, EDGE OR CENTERLINE OF IMPROVEMENT, OR AS OTHERWISE NOTED.
18. PROVIDE FOR THE LAYOUT AND STAKING/MARKING OF THE PROPOSED LOCATION OF ALL PROPOSED SITE IMPROVEMENTS, INCLUDING FURNISHINGS. OBTAIN ENGINEER'S APPROVAL OF THE LAYOUT PRIOR TO PROCEEDING WITH THE WORK.
19. UNLESS OTHERWISE INDICATED, LINES ARE PARALLEL OR PERPENDICULAR TO LINE FROM WHICH THEY ARE MEASURED.

PLANTING NOTES:

1. THE CONTRACTOR SHALL CLEARLY MARK LIMITS OF CLEARING AND LIMITS OF TREE REMOVAL, SELECTIVE PRUNING AND THINNING FOR REVIEW BY THE LANDSCAPE ARCHITECT PRIOR TO ANY CLEARING OPERATIONS. ALL TREE WORK SHALL BE EXECUTED BY A LICENSED ARBORIST.
2. THE CONTRACTOR SHALL TAKE ALL MEASURES NECESSARY TO PROTECT EXISTING VEGETATION THAT IS DESIGNATED, "TO REMAIN".
3. ALL TREES TO BE SAVED SHALL BE PROTECTED. SEE SPECIFICATION FOR TREE PROTECTION REQUIREMENTS.
4. EXISTING ON SITE TOPSOIL MAY BE REUSED UPON APPROVAL BY THE LANDSCAPE ARCHITECT. EXISTING TOPSOIL SHALL BE TESTED AND AMENDED FOR NUTRIENTS, ORGANIC MATTER, PH, AND SOIL TEXTURE. – SEE SPECIFICATIONS.
5. REMOVE ALL ROCKS AND DEBRIS FROM SOIL SURFACE AND GRADE TO AN EVEN SURFACE. – SEE SPECIFICATIONS.
6. COMPLETE QUANTITIES OF PLANTS FOR EACH AREA TO BE AVAILABLE ON SITE AT THE TIME OF PLANTING FOR FIELD LAYOUT BY OWNER'S REPRESENTATIVE. NO PARTIAL LAYOUT AND PLANTING OF AREAS WILL BE ACCEPTABLE.
7. ALL PLANT MATERIAL SHALL CONFORM TO THE MINIMUM GUIDELINES ESTABLISHED BY THE AMERICAN STANDARD FOR NURSERY STOCK PUBLISHED BY THE AMERICAN ASSOCIATION OF NURSERYMEN, INC. – SEE SPECIFICATION FOR DETAILED REQUIREMENTS.
8. ANY PROPOSED SUBSTITUTIONS OF PLANT MATERIAL SHALL BE MADE WITH MATERIAL EQUIVALENT TO THE DESIRED MATERIAL IN OVERALL FORM, HEIGHT, BRANCHING HABIT, FLOWER, LEAF, COLOR, FRUIT AND CULTURE. NO SUBSTITUTION OF PLANT SPECIES OR VARIETIES WILL BE ACCEPTABLE WITHOUT LANDSCAPE ARCHITECT'S WRITTEN APPROVAL.
9. OWNER'S REPRESENTATIVE TO APPROVE PLANT MATERIAL PRIOR TO DELIVERY TO SITE AND AGAIN AT THE PROJECT SITE PRIOR TO PLANTING.
10. VERIFY ALL EXISTING UTILITY LINES PRIOR TO PLANTING AND REPORT ANY CONFLICTS TO THE OWNER OR HIS REPRESENTATIVE.
11. NO PLANTING SHALL OCCUR PRIOR TO ACCEPTANCE OF FINAL GRADING.
12. INSTALL PLANTS WITH ROOT FLARES FLUSH WITH GRADE. IMMEDIATELY REPLANT PLANTS WHICH SETTLE OUT OF PLUMB OR BELOW FINISH GRADE.
13. SEE SPECIFICATIONS FOR PLANTING MAINTENANCE AND GUARANTEE REQUIREMENTS.
14. THE LANDSCAPE ARCHITECT OR ENGINEER RESERVES THE RIGHT TO ADJUST FINAL GRADES IN THE FIELD TO SAVE EXISTING VEGETATION.
15. PLANT QUANTITIES NOTED IN THE PLANT SCHEDULE ARE APPROXIMATE AND ARE PROVIDED FOR THE CONVENIENCE OF THE CONTRACTOR. THE CONTRACTOR SHALL BE RESPONSIBLE FOR THE FURNISHING AND INSTALLATION OF ALL PLANT MATERIALS NOTED ON THE PLANTING PLAN.
16. CAUTION SHALL BE USED NOT TO EXTEND MULCH LAYER ABOVE SOIL LEVEL AT TRUNKS/STEMS OF INSTALLED PLANT MATERIAL.
17. PROVIDE FOUR (4) FOOT DIAMETER MULCH CIRCLE AROUND ALL INDIVIDUAL TREE PLANTINGS AND CONTINUOUS MULCH BED AROUND SHRUB, PERENNIAL AND GROUNDCOVER PLANTINGS, UNLESS OTHERWISE NOTED. DO NOT MOUND SOIL OR MULCH AT TRUNKS.
18. ALL PLANTING SHALL BE DONE UNDER FULL SUPERVISION OF CERTIFIED ARBORIST, NURSERYMAN, OR LICENSED LANDSCAPE ARCHITECT.
19. LOOSE OR CRACKED ROOTBALLS SHALL BE REJECTED.

SEWER DESIGN NOTES:

1. SEWER DESIGN IN ACCORDANCE WITH CT PUBLIC HEALTH CODE ON-SITE SEWAGE DISPOSAL REGULATIONS AND TECHNICAL STANDARDS FOR SUBSURFACE SEWAGE DISPOSAL SYSTEMS (SSDS), REVISED JANUARY 2018.
2. TOTAL NUMBER OF PROPOSED BEDROOMS = 73
3. PER SECTION IV.A, DESIGN FLOW = 150 GPD/BEDROOM
4. DESIGN FLOW = 150 GPD X 73 BEDROOMS = 10,950 GPD
5. MINIMUM PUMP CHAMBER SIZE = 10,950 GPD X 4 HOURS = 1,825 GALLONS
6. PUMP CHAMBER SIZE USED = 2,000 GALLONS

GRADING AND DRAINAGE NOTES:

1. CONTRACTOR SHALL NOTIFY "CALL BEFORE YOU DIG" (1-800-922-4455) AND VERIFY UTILITY MARK-OUT WITH THE OWNER PRIOR TO THE INITIATION OF ANY SITE DISTURBANCE.
2. THE CONTRACTOR IS SOLELY RESPONSIBLE FOR VERIFICATION OF THE LOCATION AND NATURE OF ALL SUBSURFACE UTILITIES AT THE PROJECT WHICH MAY BE AFFECTED BY THE WORK. COORDINATE WITH RESPECTIVE UTILITY OWNERS AND PERFORM VERIFICATION OF TYPE, LOCATION AND INVERTS AS REQUIRED.
3. THE CONTRACTOR SHALL NOTIFY THE ENGINEER OF ANY AND ALL DISCREPANCIES BETWEEN EXISTING CONDITIONS AND THE CONTRACT DOCUMENTS BEFORE PROCEEDING WITH THAT PORTION OF THE WORK.
4. THE LOCATIONS OF EXISTING SITE FEATURES AS SHOWN HAVE BEEN OBTAINED FROM MAPS, SURVEYS, FIELD INSPECTIONS, AND OTHER AVAILABLE INFORMATION. THEY MUST BE CONSIDERED APPROXIMATE BOTH TO LOCATION, SIZE, AND AS-BUILT CONDITION AND ARE PROVIDED FOR INFORMATIONAL PURPOSES ONLY. THE CONTRACTOR IS SOLELY RESPONSIBLE FOR DETERMINING ACTUAL FIELD CONDITIONS.
5. THE DIMENSIONS SHOWN ON THE PLANS, INCLUDING THE INTENDED DIMENSIONS OF THE WORK, MAY VARY FROM ACTUAL EXISTING CONDITIONS IN THE FIELD. THE CONTRACTOR SHALL TAKE APPROPRIATE MEASUREMENTS TO VERIFY ALL DIMENSIONS SHOWN ON THE DRAWINGS AS WELL AS OTHER DIMENSIONS HE MAY DEEM APPROPRIATE TO FACILITATE THE COMPLETION OF THE WORK.
6. ENGAGE A CONNECTICUT-LICENSED LAND SURVEYOR TO PERFORM LAND-SURVEYING SERVICES REQUIRED, INCLUDING, BUT NOT LIMITED TO VERIFICATION AND LAYOUT OF PROPOSED IMPROVEMENTS, DIMENSIONS, AND ELEVATIONS. REPORT DISCREPANCIES TO THE ENGINEER.
7. UNLESS OTHERWISE INDICATED, ALL DISTURBED AREAS SHALL BE RESTORED WITH SIX (6) INCHES OF LOAM, SEEDED, FERTILIZED, AND MULCHED. PROVIDE ADDITIONAL EROSION CONTROLS AS REQUIRED.
8. NO TOPSOIL IS TO BE REMOVED FROM THE SITE.
9. COMPLY WITH CONNECTICUT BUILDING CODE FOR ALL SITE CONSTRUCTION, INCLUDING HANDICAPPED ACCESSIBILITY.
10. THE CROSS-SLOPE OF ANY SIDEWALK, WALKWAY, OR OTHER PEDESTRIAN SURFACE SHALL NOT BE STEEPER THAN 1:48 (2%).
11. ACCESSIBLE ROUTES SHALL COMPLY WITH CONNECTICUT BUILDING CODE. THE RUNNING SLOPE OF WALKING SURFACES SHALL NOT BE STEEPER THAN 1:20 (5%). THE CROSS SLOPE OF A WALKING SURFACE SHALL NOT BE STEEPER THAN 1:48 (2%).
12. RAMPS SHALL COMPLY WITH CT BUILDING CODE, REF. 2012 IBC SECTION 1010 AND ICC/ANSI A117.1 2009 CHAPTER 4, SECTION 405.
13. VERIFY ALL GRADES AND SLOPES PRIOR TO CONCRETE PLACEMENT. REPORT DISCREPANCIES TO THE ENGINEER BEFORE PROCEEDING WITH THE WORK.
14. PROPOSED GRADES INDICATE DESIGN INTENT. VERIFY ELEVATIONS AND MAKE ADJUSTMENTS TO MEET FIELD CONDITIONS. DO NOT PROCEED WITH ANY ADJUSTMENT OR FIELD MODIFICATION UNTIL APPROVED BY THE ENGINEER.
15. GRADE TRANSITION BETWEEN TOPOGRAPHIC LINES AND SPOT GRADES SHALL BE UNIFORM UNLESS OTHERWISE INDICATED.
16. UNLESS OTHERWISE INDICATED, BLEND TRANSITIONS IN ELEVATION BETWEEN NEW WORK AND AREAS TO REMAIN AT A MAXIMUM SLOPE OF 1V:2H AND RESTORE WITH FOUR (4) INCHES OF LOAM AND SEED. PROVIDE ADDITIONAL EROSION CONTROLS AS REQUIRED. COORDINATE WITH ENGINEER IF DIMENSIONAL CONSTRAINTS REQUIRE STEEPER SLOPES.
17. UPON REACHING PROPOSED SUBGRADE ELEVATIONS WITHIN THE FIELD, ENGINEER WILL REVIEW SUBGRADE PRIOR TO INSTALLATION OF DRAINAGE SYSTEM. SEE SPECIFICATION SECTION 31 2310 – EARTHWORK.
18. ALL CATCH BASINS AND SHALLOW DROP INLETS SET AGAINST CURBS SHALL BE CONNDOT TYPE "C". ALL OTHERS SHALL BE CONNDOT TYPE "C-L"..
19. ALL UNDERDRAINS SHALL BE 6-INCH HDPE. SEE SPECIFICATIONS.
20. THE TOPS, RIMS, FRAMES, GRATES, AND COVERS (AS APPLICABLE) OF ALL UTILITY STRUCTURES THAT ARE TO REMAIN SHALL BE ADJUSTED TO MATCH FINAL GRADE IN A FLUSH CONDITION. ALL NEW UTILITY STRUCTURES SHALL BE INSTALLED WITH TOPS, RIMS, FRAMES, GRATES, AND COVERS (AS APPLICABLE) TO FINAL GRADE IN A FLUSH CONDITION.
21. AT THE CONCLUSION OF THE WORK, CONTRACTOR SHALL REMOVE ALL ACCUMULATED SEDIMENT MATERIAL FROM ALL PORTIONS OF THE STORM DRAINAGE SYSTEM, INCLUDING NEW WORK AND EXISTING WORK THAT REMAINS OR IS INCORPORATED INTO THE NEW SYSTEM.

OPERATION AND MAINTENANCE PLAN:

THE FOLLOWING MAINTENANCE PROCEDURES SHALL BE FOLLOWED BY THE CONTRACTOR FOR TEMPORARY AND PERMANENT EROSION AND SEDIMENTATION MEASURES AND STORMWATER TREATMENT SYSTEMS INSTALLED DURING THE CONSTRUCTION PERIOD:

- DUST CONTROL: MOISTEN DISTURBED SOIL AREAS WITH WATER PERIODICALLY, OR USE A NON-ASPHALTIC SOIL TACIFIER TO MINIMIZE DUST.
- TEMPORARY SEEDING: INSPECT WEEKLY AND WITHIN 24 HOURS OF A STORM GENERATING A DISCHARGE. CONTINUE INSPECTION UNTIL VEGETATION IS FIRMLY ESTABLISHED.
- PERMANENT SEEDING: INSPECT SEEDED AREAS WEEKLY AND WITHIN 24 HOURS AFTER A STORM GENERATING A DISCHARGE. CONTINUE INSPECTION UNTIL VEGETATION IS FIRMLY ESTABLISHED.
- TEMPORARY SOIL PROTECTION: INSPECT SEEDED AREAS WEEKLY AND WITHIN 24 HOURS AFTER A STORM GENERATING A DISCHARGE.
- TEMPORARY EROSION CONTROL MAT: INSPECT MATS WEEKLY AND WITHIN 24 HOURS AFTER A STORM GENERATING A DISCHARGE.
- CATCH BASIN FILTER INSERTS: INSPECT THE FABRIC AT LEAST ONCE A WEEK AND WITHIN 24 HOURS AFTER THE END OF A STORM GENERATING A DISCHARGE. CHECK THE FABRIC FOR STRUCTURAL SOUNDNESS (I.E. TEARS), PROPER ANCHORING/ALIGNMENT WITHIN THE GRATE AND ABILITY TO DRAIN RUNOFF (I.E. PERCENT OF CLOGGING BY SEDIMENT). REMOVE THE SEDIMENT EVERY WEEK, OR SOONER IF PONDING IS EXCESSIVE. EACH TIME THE SEDIMENT IS REMOVED, REPLACE THE SECTION OF FABRIC REMOVED WITH A NEW SECTION. DO NOT REMOVE THE SEDIMENT AND REUSE THE SAME SECTION OF FABRIC.
- HAY BALE/ SILT FENCE BARRIER: INSPECT THE BARRIER AT LEAST ONCE A WEEK AND WITHIN 24 HOURS AFTER THE END OF A STORM GENERATING A DISCHARGE. FOR DEWATERING OPERATIONS, INSPECT FREQUENTLY BEFORE, DURING AND AFTER PUMPING OPERATIONS. REMOVE THE SEDIMENT DEPOSITS WHEN THE DEPTH REACHES ONE HALF THE BARRIER HEIGHTS. REPAIR OR REPLACE A BARRIER WITHIN 24 HOURS OF OBSERVED FAILURE. MAINTAIN THE BARRIER UNTIL THE CONTRIBUTING DISTURBED AREA IS STABILIZED.
- CONSTRUCTION ENTRANCE/EXIT PAD: MAINTAIN THE PAD IN A CONDITION THAT WILL PREVENT TRACKING AND WASHING OF SEDIMENT ONTO PAVED SURFACES. PLACE ADDITIONAL CLEAN GRAVEL ON TOP OF GRAVEL THAT HAS BECOME SILTED, OR REMOVE THE SILTED GRAVEL AND REPLACE THE GRAVEL TO THE DEPTH REMOVED WITH CLEAN GRAVEL, AS CONDITIONS WARRANT. REMOVE IMMEDIATELY ALL SEDIMENT SPILLED, DROPPED, WASHED OR TRACKED ONTO PAVED SURFACES. ROADS ADJACENT TO THE CONSTRUCTION SITE SHALL BE CLEANED AT THE END OF EACH DAY BY HAND SWEEPING OR SWEEPER TRUCK.
- DEWATERING SETTLING BASIN (IF USED): INSPECT THE BASIN AT LEAST EVERY TWO HOURS DURING PERIODS OF USE. REMOVE ACCUMULATED SEDIMENTS WHEN THE VOLUME EQUALS ONE HALF THE PROVIDED STORAGE VOLUME.
- EXISTING CATCH BASINS AND SUMPS: INSPECT THE SEDIMENT TRAPS AS SPECIFIED IN "F" ABOVE. AFTER FINAL REMOVAL OF THE SEDIMENT TRAPS AT THE END OF CONSTRUCTION, CLEAN THE SUMP OF ALL SILT AND DEBRIS.
- NEW CATCH BASINS AND SUMPS: AS NEW CATCH BASINS ARE CONSTRUCTED, A FILTER INSERT SHALL BE INSTALLED IN THE UNIT AND A SEDIMENT BARRIER INSTALLED AROUND THE GRATE. INSPECT THE FILTER AND BARRIER WEEKLY AND WITHIN 24 HOURS AFTER A STORM GENERATING A DISCHARGE. AFTER STABILIZATION OF THE DRAINAGE AREA ENTERING THE CATCH BASIN, REMOVE THE FILTER AND BARRIER AND CLEAN THE BASIN SUMP OF ALL SILT AND DEBRIS.
- TEMPORARY STOCKPILES: INSPECT TEMPORARY STOCKPILES AT THE END OF EACH WORKDAY TO ENSURE THAT TARPS ARE IN PLACE AND SECURED. TEMPORARY STOCKPILES THAT ARE EXPECTED TO BE INACTIVE FOR MORE THAN 30 DAYS SHOULD BE TEMPORARILY SEEDED (SEE ABOVE).

AFTER CONSTRUCTION IS COMPLETED AND ACCEPTED BY THE OWNER, IT SHALL BE THE RESPONSIBILITY OF THE OWNER TO MAINTAIN ALL DRAINAGE STRUCTURES. IN ADDITION, THE FOLLOWING INSPECTION AND MAINTENANCE GUIDELINES SHALL BE THE RESPONSIBILITY OF THE OWNER, OR THE OWNER'S REPRESENTATIVE, BEGINNING THE FIRST YEAR PERIOD FOLLOWING CONSTRUCTION COMPLETION AND ACCEPTANCE, AND SHALL BE FOLLOWED EACH YEAR THEREAFTER:

- PARKING LOT AND SITE CLEANUP: INSPECT ON A REGULAR BASIS NOT TO EXCEED WEEKLY FOR LITTER AND DEBRIS.
- PARKING LOT AND DRIVEWAY SWEEPING: AT LEAST TWICE A YEAR, WITH THE FIRST OCCURRING AS SOON AS POSSIBLE AFTER SNOWMELT AND THE SECOND NOT LESS THAN 90 DAYS FOLLOWING THE FIRST.
- CATCH BASIN SUMPS: SHALL BE INSPECTED SEMI-ANNUALLY AND CLEANED WHEN THE SUMP IS ONE HALF FULL OF SILT AND / OR DEBRIS.
- HYDRODYNAMIC SEPARATOR: SHALL BE INSPECTED AND CLEANED ANNUALLY.
- LANDSCAPED AREAS: INSPECT SEMI-ANNUALLY FOR EROSION OR DYING VEGETATION. REPAIR AND STABILIZE ANY BARE OR ERODED AREAS AND REPLACE VEGETATION AS SOON AS POSSIBLE.
- ABOVE-GROUND DETENTION BASIN: SHALL BE INSPECTED SEMI-ANNUALLY AND CLEANED OF ANY SEDIMENT AND/OR DEBRIS. SHALL BE MOWED ANNUALLY.
- UNDERGROUND DETENTION SYSTEMS: SHALL BE INSPECTED SEMI-ANNUALLY AND CLEANED OF ANY SEDIMENT AND/OR DEBRIS.

DEEP TEST PIT RESULTS:

DEEP TESTS PERFORMED ON 02/08/2020 BY BSC GROUP. SEE SHEET C-4.0 FOR LOCATIONS OF DEEP TESTS.

TH-1 (APPROX. GROUND EL. 619.00±)
0-8" TOPSOIL
8-40" BROWN SANDY LOAM
40-100" BROWN SAND WITH SOME FINES

GW @ 100"
NO MOTTLING
RESTRICTIVE LAYER @ EL. 610.67±

TH-2 (APPROX. GROUND EL. 615.75±)
0-12" TOPSOIL
12-20" BROWN SAND
20-72" GRAY GLACIAL TILL

GW @ 54"
MOTTLING @ 48"
RESTRICTIVE LAYER @ EL. 611.75±

TH-3 (APPROX. GROUND EL. 614.75±)
0-12" TOPSOIL
12-60" BROWN SILTY SAND

GW @ 60"
MOTTLING @ 38"
RESTRICTIVE LAYER @ EL. 611.58±

TH-4 (APPROX. GROUND EL. 616.50±)
0-12" TOPSOIL
12-36" BROWN SAND
36-84" GRAY GLACIAL TILL

POSSIBLE LEDGE @ 84"
GW @ 84"
RESTRICTIVE LAYER @ EL. 609.50±

TH-5 (APPROX. GROUND EL. 618.50±)
0-12" TOPSOIL
12-24" BROWN SANDY LOAM
24-84" BROWN FINE SAND

GW @ 80"
NO MOTTLING
RESTRICTIVE LAYER @ EL. 611.83±

TH-6 (APPROX. GROUND EL. 619.75±)
0-12" TOPSOIL
12-40" BROWN SAND WITH FINES
40-96" GRAY FINE SAND

NO GW OBSERVED
NO MOTTLING
RESTRICTIVE LAYER @ EL. 611.75±

ISSUED FOR PERMITTING

EAGLEVILLE GREEN - NOVEMBER 25, 2019

ROBERT NEWTON, PE No. 20662

EAGLEVILLE GREEN

113-121 SOUTH EAGLEVILLE ROAD
IN
MANSFIELD CONNECTICUT

GENERAL NOTES

NOVEMBER 25, 2019

REVISIONS:

1	01/20/2020	PER TOWN COMMENTS
2	01/31/2020	PER TOWN COMMENTS
3	02/12/2020	PER TEST PIT RESULTS

PREPARED FOR:
MANSFIELD HOUSING DEV. CORP.
309 MAPLE ROAD
STORRS, CT 06268

BSC GROUP
300 Winding Brook Drive
Glastonbury, Connecticut 06033
860 652 8227

© 2019 BSC GROUP, INC.

SCALE: 1" = 30'
0 15 30 60 FEET

FILE: 8374900-NOTES.DWG
DWG. NO: G-1.0
JOB. NO: 83749.00

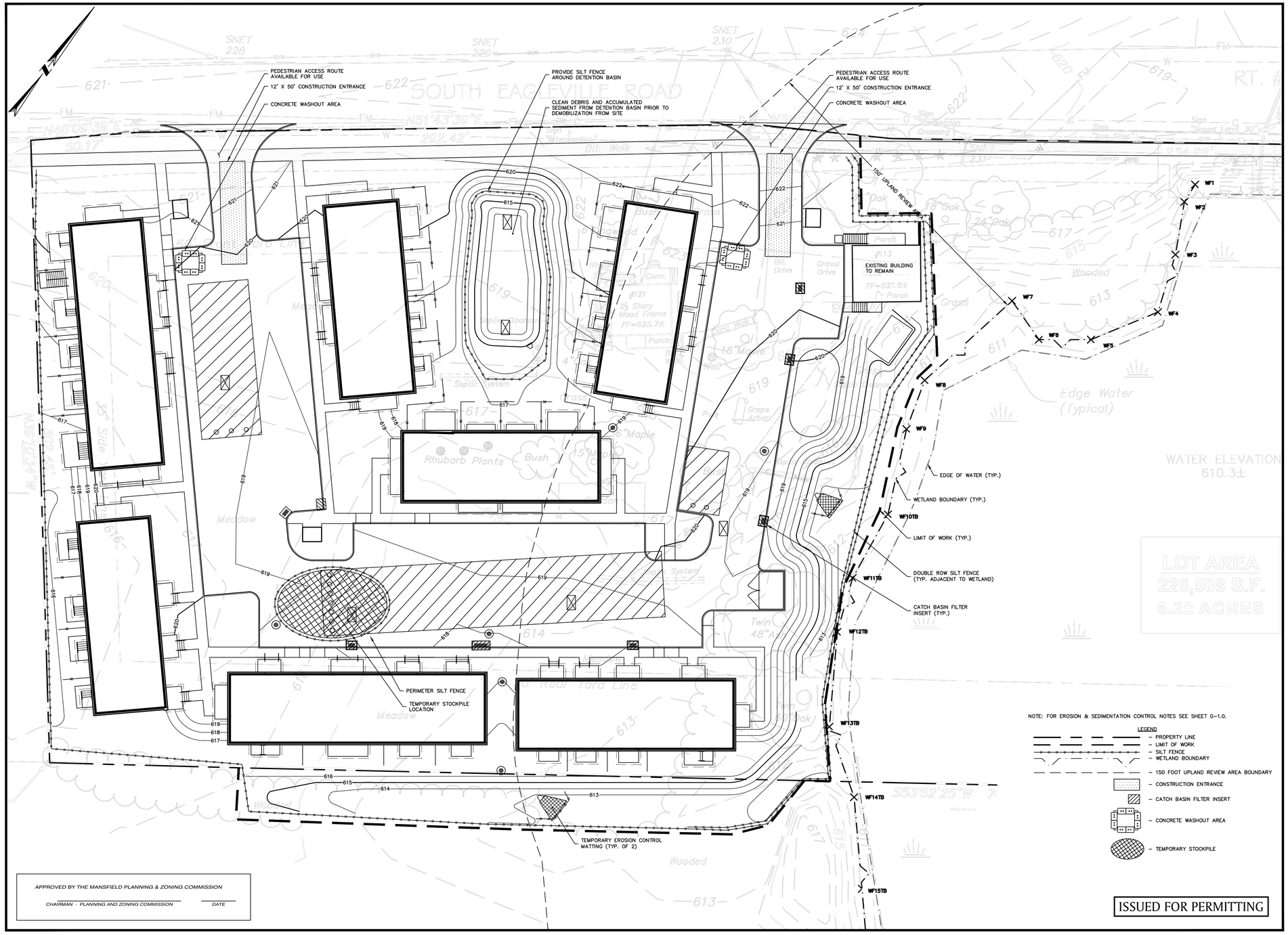

NOTE: FOR EROSION & SEDIMENTATION CONTROL NOTES SEE SHEET G-1.0.

LEGEND

- PROPERTY LINE
- LIMIT OF WORK
- SILT FENCE
- WETLAND BOUNDARY
- 150 FOOT UPLAND REVIEW AREA BOUNDARY
- CONSTRUCTION ENTRANCE
- CATCH BASIN FILTER INSERT
- CONCRETE WASHOUT AREA
- TEMPORARY STOCKPILE

APPROVED BY THE MANSFIELD PLANNING & ZONING COMMISSION

CHAIRMAN - PLANNING AND ZONING COMMISSION _____ DATE _____

ISSUED FOR PERMITTING

STATE OF CONNECTICUT ROBERT S. NEWTON No. 20662 LICENSED PROFESSIONAL ENGINEER

ROBERT NEWTON, PE No. 20662

EAGLEVILLE GREEN

113-121 SOUTH EAGLEVILLE ROAD
IN
MANSFIELD
CONNECTICUT

EROSION & SEDIMENTATION CONTROL PLAN

NOVEMBER 25, 2019

REVISIONS:

1	01/20/2020	PER TOWN COMMENTS
2	01/31/2020	PER TOWN COMMENTS
3	02/12/2020	PER TEST PIT RESULTS

PREPARED FOR:
MANSFIELD HOUSING DEV. CORP.
309 MAPLE ROAD
STORRS, CT 06268

BSC GROUP
300 Winding Brook Drive
Glastonbury, Connecticut 06033
860 652 8227

© 2019 BSC GROUP, INC.

SCALE: 1" = 20'
0 10 20 40 FEET

FILE: 8374900-ES.DWG
DWG. NO: C-1.0
JOB. NO: 83749.00

EAGLEVILLE GREEN - NOVEMBER 25, 2019

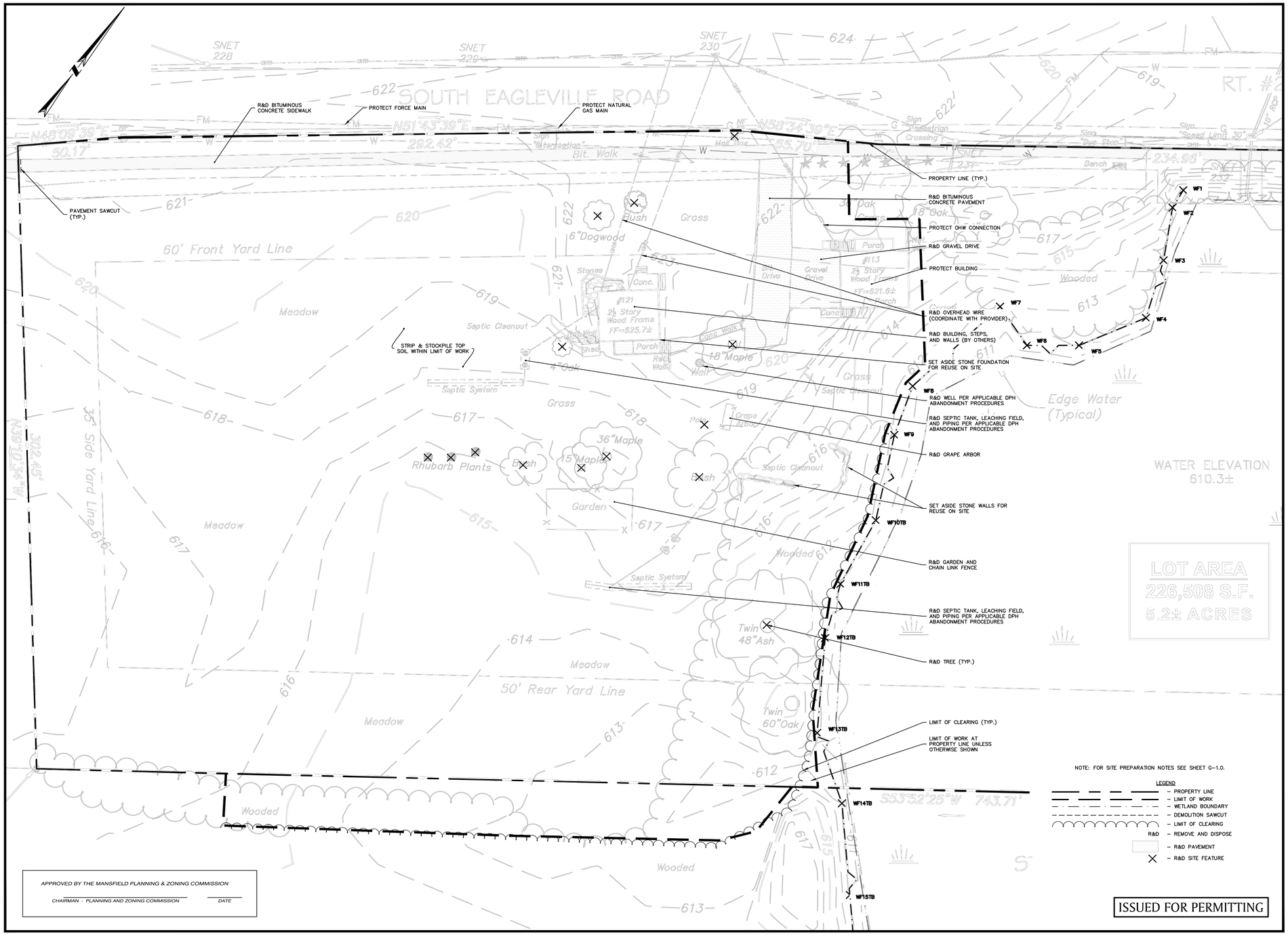

EAGLEVILLE GREEN - NOVEMBER 25, 2019

STATE OF CONNECTICUT ROBERT S. NEWTON No. 20662 LICENSED PROFESSIONAL ENGINEER

ROBERT NEWTON, PE No. 20662

EAGLEVILLE GREEN

113-121 SOUTH EAGLEVILLE ROAD
IN
MANSFIELD
CONNECTICUT

SITE PREPARATION PLAN

NOVEMBER 25, 2019

REVISIONS:

1	01/20/2020	PER TOWN COMMENTS
2	01/31/2020	PER TOWN COMMENTS
3	02/12/2020	PER TEST PIT RESULTS

PREPARED FOR:
MANSFIELD HOUSING DEV. CORP.
309 MAPLE ROAD
STORRS, CT 06268

BSC GROUP
300 Winding Brook Drive
Glastonbury, Connecticut 06033
860 652 8227

© 2019 BSC GROUP, INC.

SCALE: 1" = 20'
0 10 20 40 FEET

FILE: 8374900-PREP.DWG
DWG. NO:
JOB. NO: 83749.00

C-2.0

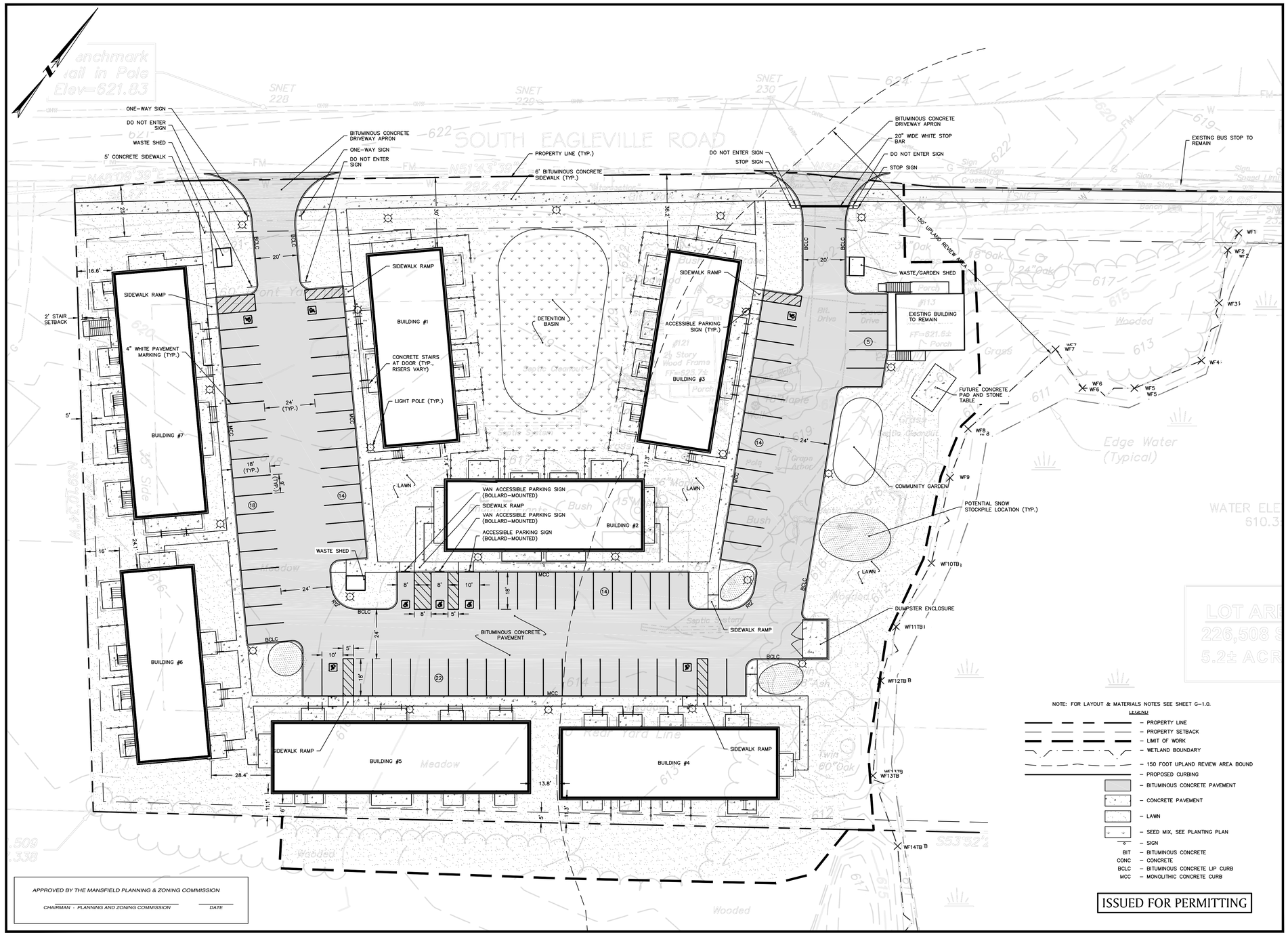

APPROVED BY THE MANSFIELD PLANNING & ZONING COMMISSION

CHAIRMAN - PLANNING AND ZONING COMMISSION DATE

NOTE: FOR LAYOUT & MATERIALS NOTES SEE SHEET G-1.0.

LEGEND

- PROPERTY LINE
- PROPERTY SETBACK
- LIMIT OF WORK
- WETLAND BOUNDARY
- 150 FOOT UPLAND REVIEW AREA BOUND
- PROPOSED CURBING
- BITUMINOUS CONCRETE PAVEMENT
- CONCRETE PAVEMENT
- LAWN
- SEED MIX, SEE PLANTING PLAN
- SIGN

BIT – BITUMINOUS CONCRETE
CONC – CONCRETE
BCLC – BITUMINOUS CONCRETE LIP CURB
MCC – MONOLITHIC CONCRETE CURB

ISSUED FOR PERMITTING

EAGLEVILLE GREEN - NOVEMBER 25, 2019

STATE OF CONNECTICUT ROBERT S. NEWTON No. 20662 LICENSED PROFESSIONAL ENGINEER

ROBERT NEWTON, PE No. 20662

EAGLEVILLE GREEN

113-121 SOUTH EAGLEVILLE ROAD
IN
MANSFIELD
CONNECTICUT

LAYOUT & MATERIALS PLAN

NOVEMBER 25, 2019

REVISIONS:

1	01/20/2020	PER TOWN COMMENTS
2	01/31/2020	PER TOWN COMMENTS
3	02/12/2020	PER TEST PIT RESULTS

PREPARED FOR:
MANSFIELD HOUSING DEV. CORP.
309 MAPLE ROAD
STORRS, CT 06268

BSC GROUP
300 Winding Brook Drive
Glastonbury, Connecticut 06033
860 652 8227

© 2019 BSC GROUP, INC.

SCALE: 1" = 20'
0 10 20 40 FEET

FILE: 8374900-LM.DWG
DWG. NO: C-3.0
JOB. NO: 83749.00

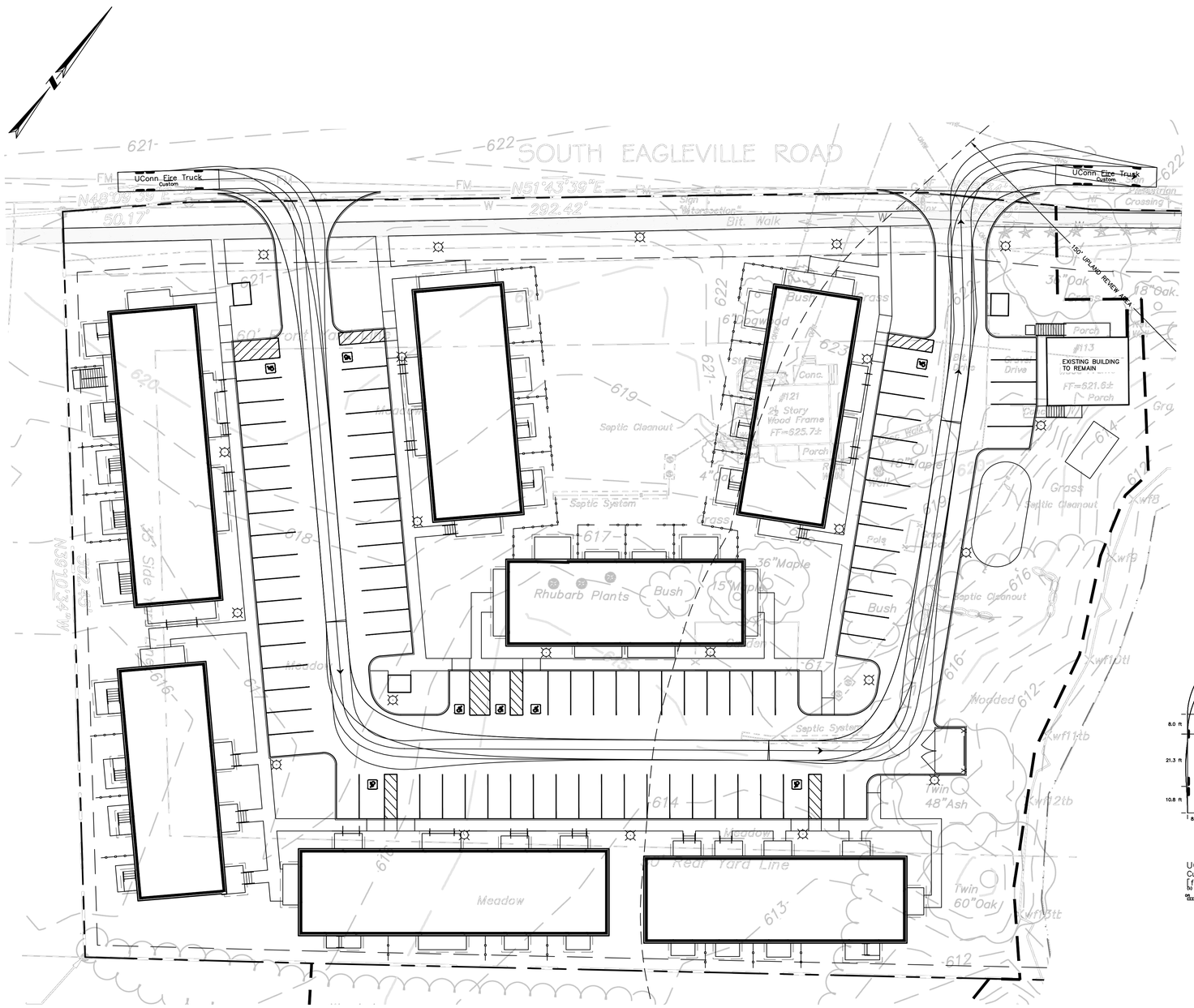

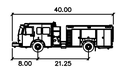

UConn Fire Truck

	feet
Width	: 8.00
Track	: 8.00
Lock to Lock Time	: 6.0
Steering Angle	: 40.7

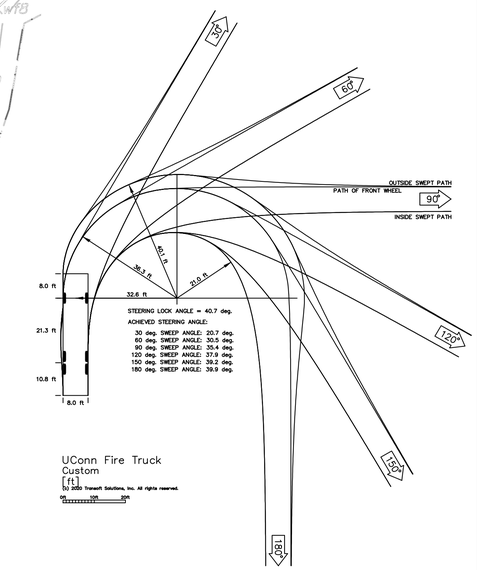

UConn Fire Truck
Custom
[ft]
(c) 2020 Transoft Solutions, Inc. All rights reserved.
0ft 10ft 20ft

ISSUED FOR PERMITTING

EAGLEVILLE GREEN - NOVEMBER 25, 2019

STATE OF CONNECTICUT · ROBERT S. NEWKIRK · No. 20662 · LICENSED PROFESSIONAL ENGINEER

ROBERT NEWKIRK, P.E.
No. 20662

EAGLEVILLE GREEN

113-121 SOUTH
EAGLEVILLE ROAD
IN
MANSFIELD
CONNECTICUT

UCONN FIRE TRUCK TURNING MOVEMENT PLAN

NOVEMBER 25, 2019

REVISIONS:

1	01/20/2020	PER TOWN COMMENTS
2	01/31/2020	PER TOWN COMMENTS
3	02/12/2020	PER TEST PIT RESULTS

PREPARED FOR:
MANSFIELD HOUSING DEV. CORP.
309 MAPLE ROAD
STORRS, CT 06268

BSC GROUP
300 Winding Brook Drive
Glastonbury, Connecticut 06033
860 652 8227

© 2019 BSC GROUP, INC.

SCALE: 1" = 20'
0 10 20 40 FEET

FILE: 8374900-AUTOTURN.DWG
DWG. NO: C-3.1
JOB. NO: 83749.00

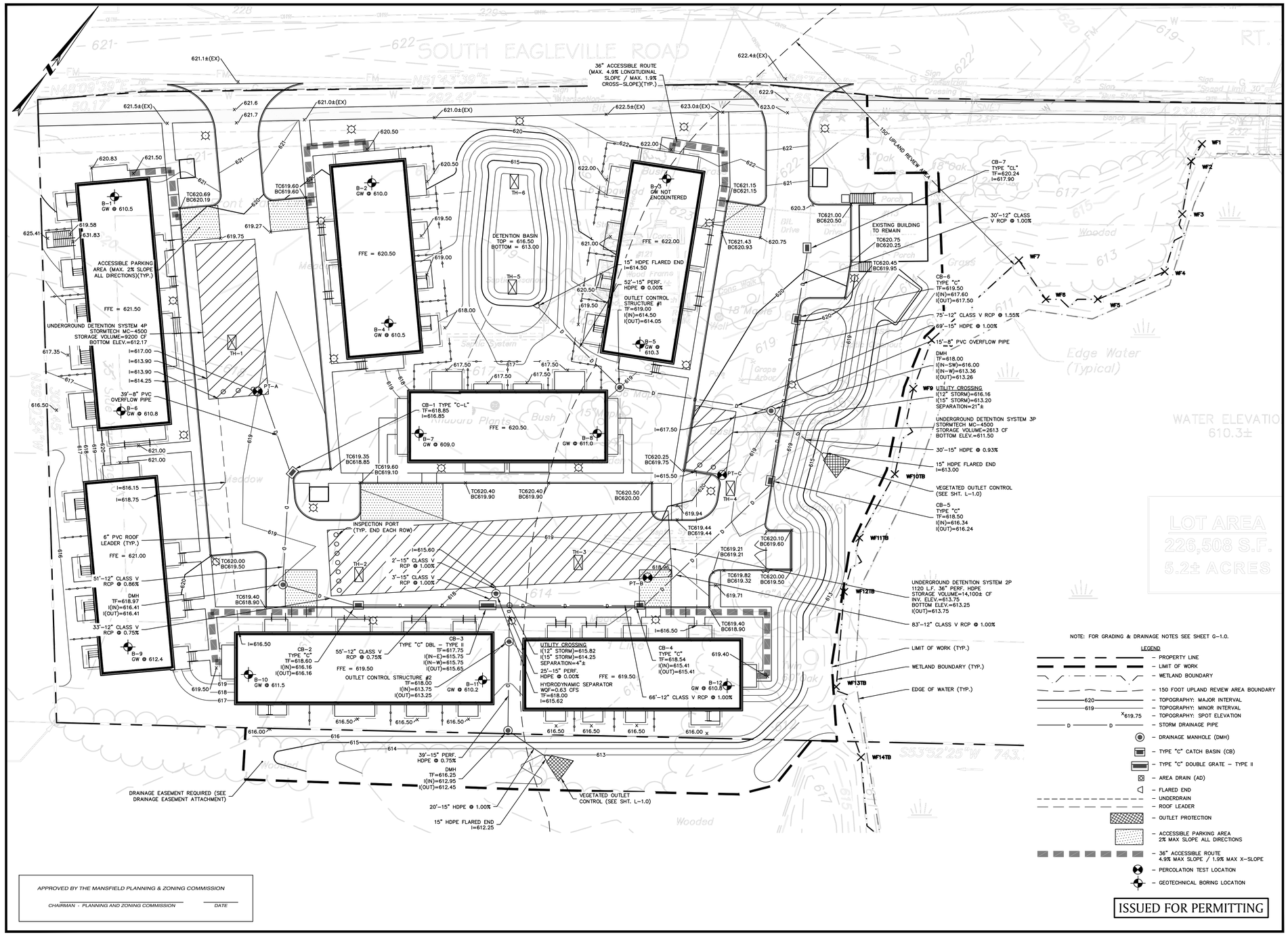

NOTE: FOR GRADING & DRAINAGE NOTES SEE SHEET G-1.0.

LEGEND

- PROPERTY LINE
- LIMIT OF WORK
- WETLAND BOUNDARY
- 150 FOOT UPLAND REVIEW AREA BOUNDARY
- TOPOGRAPHY: MAJOR INTERVAL
- TOPOGRAPHY: MINOR INTERVAL
- TOPOGRAPHY: SPOT ELEVATION
- STORM DRAINAGE PIPE
- DRAINAGE MANHOLE (DMH)
- TYPE "C" CATCH BASIN (CB)
- TYPE "C" DOUBLE GRATE – TYPE II
- AREA DRAIN (AD)
- FLARED END
- UNDERDRAIN
- ROOF LEADER
- OUTLET PROTECTION
- ACCESSIBLE PARKING AREA 2% MAX SLOPE ALL DIRECTIONS
- 36" ACCESSIBLE ROUTE 4.9% MAX SLOPE / 1.9% MAX X-SLOPE
- PERCOLATION TEST LOCATION
- GEOTECHNICAL BORING LOCATION

ISSUED FOR PERMITTING

APPROVED BY THE MANSFIELD PLANNING & ZONING COMMISSION

CHAIRMAN - PLANNING AND ZONING COMMISSION _____ DATE _____

EAGLEVILLE GREEN - NOVEMBER 25, 2019

STATE OF CONNECTICUT ROBERT S. NEWTON No. 20662 LICENSED PROFESSIONAL ENGINEER

ROBERT NEWTON, PE No. 20662

EAGLEVILLE GREEN

113-121 SOUTH EAGLEVILLE ROAD
IN
MANSFIELD
CONNECTICUT

GRADING & DRAINAGE PLAN

NOVEMBER 25, 2019

REVISIONS:

1	01/20/2020	PER TOWN COMMENTS
2	01/31/2020	PER TOWN COMMENTS
3	02/12/2020	PER TEST PIT RESULTS

PREPARED FOR:
MANSFIELD HOUSING DEV. CORP.
309 MAPLE ROAD
STORRS, CT 06268

BSC GROUP
300 Winding Brook Drive
Glastonbury, Connecticut 06033
860 652 8227

© 2019 BSC GROUP, INC.

SCALE: 1" = 20'
0 10 20 40 FEET

FILE: 8374900-GRDR.DWG
DWG. NO:
JOB. NO: 83749.00

C-4.0

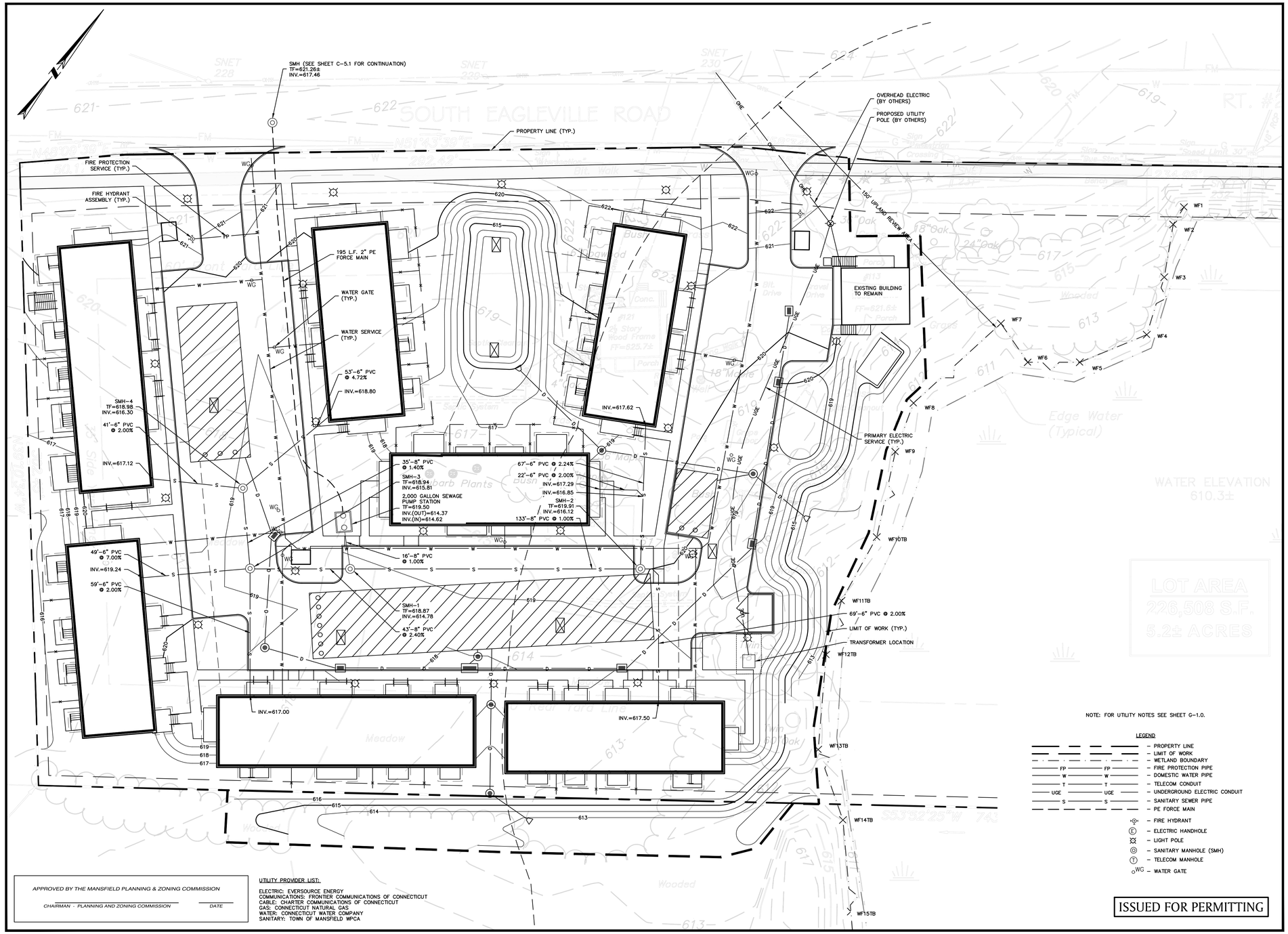

NOTE: FOR UTILITY NOTES SEE SHEET G-1.0.

LEGEND

- PROPERTY LINE
- LIMIT OF WORK
- WETLAND BOUNDARY
- FIRE PROTECTION PIPE
- DOMESTIC WATER PIPE
- TELECOM CONDUIT
- UNDERGROUND ELECTRIC CONDUIT
- SANITARY SEWER PIPE
- PE FORCE MAIN
- FIRE HYDRANT
- ELECTRIC HANDHOLE
- LIGHT POLE
- SANITARY MANHOLE (SMH)
- TELECOM MANHOLE
- WATER GATE

ISSUED FOR PERMITTING

APPROVED BY THE MANSFIELD PLANNING & ZONING COMMISSION

CHAIRMAN - PLANNING AND ZONING COMMISSION DATE

UTILITY PROVIDER LIST:

ELECTRIC: EVERSOURCE ENERGY
COMMUNICATIONS: FRONTIER COMMUNICATIONS OF CONNECTICUT
CABLE: CHARTER COMMUNICATIONS OF CONNECTICUT
GAS: CONNECTICUT NATURAL GAS
WATER: CONNECTICUT WATER COMPANY
SANITARY: TOWN OF MANSFIELD WPCA

STATE OF CONNECTICUT ROBERT S. NEWTON No. 20662 LICENSED PROFESSIONAL ENGINEER

ROBERT NEWTON, PE No. 20662

EAGLEVILLE GREEN

113-121 SOUTH EAGLEVILLE ROAD
IN
MANSFIELD CONNECTICUT

UTILITY PLAN

NOVEMBER 25, 2019

REVISIONS:

1	01/20/2020	PER TOWN COMMENTS
2	01/31/2020	PER TOWN COMMENTS
3	02/12/2020	PER TEST PIT RESULTS

PREPARED FOR:
MANSFIELD HOUSING DEV. CORP.
309 MAPLE ROAD
STORRS, CT 06268

BSC GROUP
300 Winding Brook Drive
Glastonbury, Connecticut 06033
860 652 8227

© 2019 BSC GROUP, INC.

SCALE: 1" = 20'
0 10 20 40 FEET

FILE: 8374900-UT.DWG
DWG. NO: C-5.0
JOB. NO: 83749.00

EAGLEVILLE GREEN - NOVEMBER 25, 2019

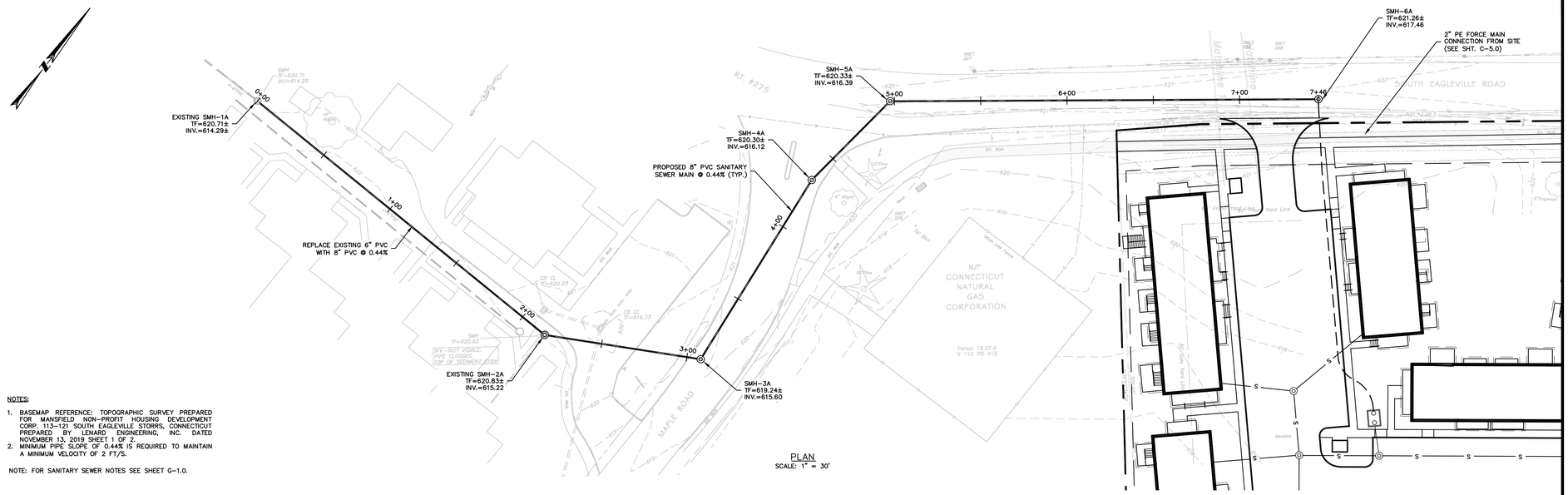

NOTES:

1. BASEMAP REFERENCE: TOPOGRAPHIC SURVEY PREPARED FOR MANSFIELD NON-PROFIT HOUSING DEVELOPMENT CORP. 113-121 SOUTH EAGLEVILLE STORRS, CONNECTICUT PREPARED BY LENARD ENGINEERING, INC. DATED NOVEMBER 13, 2019 SHEET 1 OF 2.
2. MINIMUM PIPE SLOPE OF 0.44% IS REQUIRED TO MAINTAIN A MINIMUM VELOCITY OF 2 FT/S.

NOTE: FOR SANITARY SEWER NOTES SEE SHEET G-1.0.

PLAN
SCALE: 1" = 30'

SANITARY SEWER MAIN

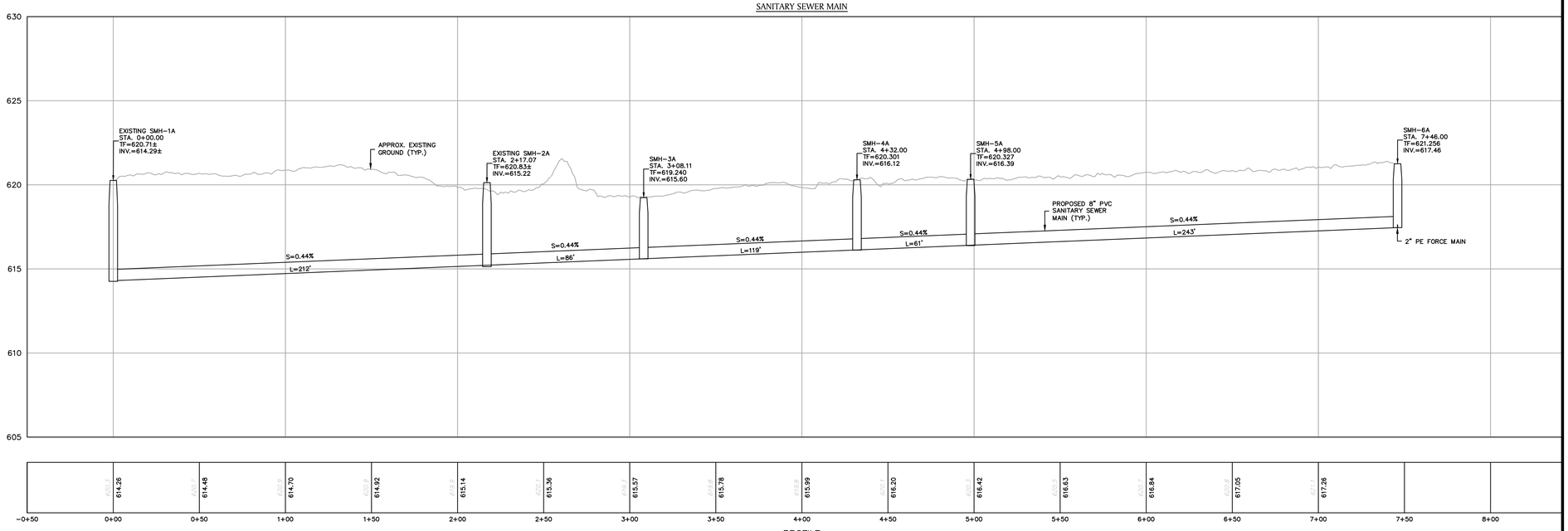

PROFILE
HORIZONTAL SCALE: 1" = 30'
VERTICAL SCALE: 1" = 3'

APPROVED BY THE MANSFIELD PLANNING & ZONING COMMISSION

CHAIRMAN - PLANNING AND ZONING COMMISSION DATE

ISSUED FOR PERMITTING

EAGLEVILLE GREEN - NOVEMBER 25, 2019

STATE OF CONNECTICUT ROBERT S. NEWTON No. 20662 LICENSED PROFESSIONAL ENGINEER

ROBERT NEWTON, PE No. 20662

EAGLEVILLE GREEN

113-121 SOUTH
EAGLEVILLE ROAD
IN
MANSFIELD
CONNECTICUT

SANITARY SEWER PLAN & PROFILE

NOVEMBER 25, 2019

REVISIONS:

1	01/20/2020	PER TOWN COMMENTS
2	01/31/2020	PER TOWN COMMENTS
3	02/12/2020	PER TEST PIT RESULTS

PREPARED FOR:
MANSFIELD HOUSING DEV. CORP.
309 MAPLE ROAD
STORRS, CT 06268

BSC GROUP
300 Winding Brook Drive
Glastonbury, Connecticut 06033
860 652 8227

© 2019 BSC GROUP, INC.

SCALE: 1" = 30'
0 15 30 60 FEET

FILE: 8374900-SEWER_ALT2.DWG
DWG. NO:
JOB. NO: 83749.00
C-5.1

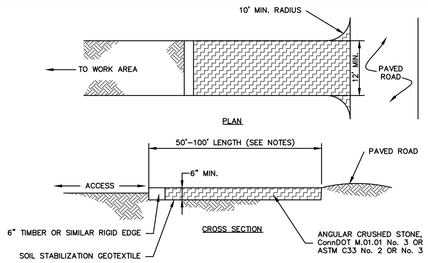

NOTES:

1. REMOVE TOPSOIL AND ORGANICS PRIOR TO CRUSHED STONE PLACEMENT.
2. INSTALL SUB-BASE OF FREE DRAINING BACKFILL OR ROAD STABILIZATION GEOTEXTILE AS NECESSARY ON UNSTABLE SOILS.
3. LENGTH SHALL BE 50 FOOT MINIMUM. WHERE TRACKED SEDIMENTS CONTAIN LESS THAN 80% SAND, LENGTH SHALL BE 100 FOOT MINIMUM.
4. IF THE GRADE OF THE CONSTRUCTION ENTRANCE DRAINS TO THE PAVED SURFACE AND IT EXCEEDS 2% SLOPE, CONSTRUCT ENTRANCE AT LEASE 15 FEET FROM ITS ENTRANCE ONTO THE PAVED SURFACE WHILE DIVERTING RUN-OFF WATER TO A SETTLING OR FILTERING AREA.
5. CONSTRUCT ANY DRAINAGE AND SETTLING FACILITIES REQUIRED TO ACCOMMODATE VEHICLE WASHING OPERATIONS. DIVERT ALL WASH WATER AWAY FROM ENTRANCE TO THE SETTLING AREA.
6. MAINTAIN ENTRANCE IS A CONDITION THAT WILL PREVENT WASHING OF SEDIMENT ONTO PAVED SURFACES.

CONSTRUCTION ENTRANCE

SCALE: NONE
EC-101-CT

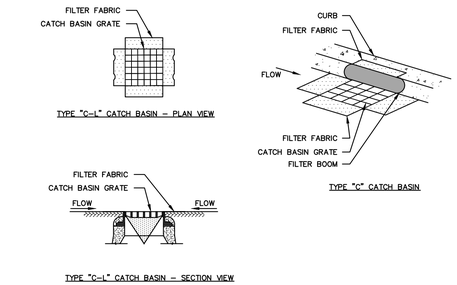

GENERAL NOTES

1. PROVIDE INLET PROTECTION TO ALL EXISTING CATCH BASINS IN THE VICINITY OF CONSTRUCTION. PROTECT NEW CATCH BASINS AS THEY ARE CONSTRUCTED.
2. GRATE TO BE PLACED OVER FILTER FABRIC.

CATCH BASIN FILTER INSERT

SCALE: NONE

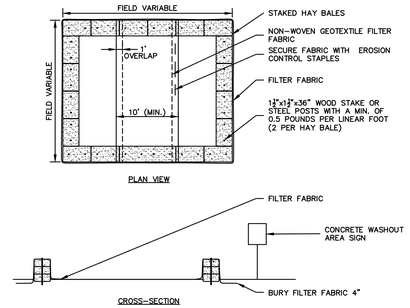

NOTES:

1. CONSTRUCT WASHOUT AREA LARGE ENOUGH TO ENSURE MATERIALS WILL BE CONTAINED WHERE WASTE CONCRETE CAN SOLIDIFY IN PLACE AND EXCESS WATER CAN SAFELY EVAPORATE.
2. WASHOUT AREA SHALL BE LARGE ENOUGH TO RETAIN ALL LIQUID AND WASTE CONCRETE MATERIALS FROM WASHOUT OPERATION.
3. WEEKLY INSPECTIONS OF WASHOUT AREAS SHALL BE CONDUCTED TO ASSESS THE HOLDING CAPACITY AND FUNCTIONALITY OF THE WASHOUT AREA.

TEMPORARY CONCRETE WASHOUT AREA

SCALE: NONE

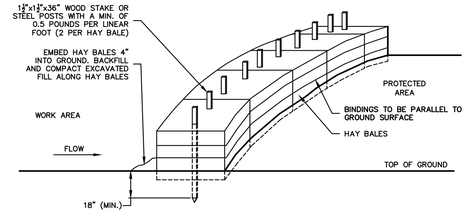

GENERAL NOTES

1. HAY BALES SHALL BE MADE OF HAY OR STRAW WITH 40 POUND MIN. WEIGHT AND 120 POUND MAX. WEIGHT HELD TOGETHER BY TWINE OR WIRE.
2. PLACE HAY BALES ON CONTOUR AND WING THE LAST HAY BALES UP SLOPE SO THAT THE TOP OF THE LAST SEVERAL HAY BALES ARE HIGHER THAN THE LINE OF HAY BALES.
3. DRIVE FIRST STAKE IN EACH BALE TOWARD THE PREVIOUSLY LAID BALE TO FORCE THEM TOGETHER.
4. PUT ONE HAY BALE PERPENDICULAR ALONG HAY BALE BARRIER EACH 100 FEET.

STRAW BALE BARRIER

SCALE: NONE
EC-106-CT

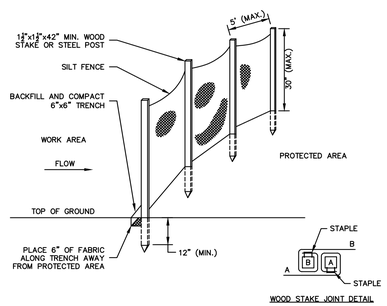

GENERAL NOTES

1. FOR SLOPE & SWALE INSTALLATIONS, EXTEND FENCE OP SLOPE SUCH THAT BOTTOM ENDS OF FENCE WILL BE HIGHER THAN THE TOP OF THE LOWEST PORTION OF FENCE.
2. FOR FENCE INSTALLED ON LEVEL TERRAIN INSTALL WING SECTIONS PERPENDICULAR TO MAIN BARRIER AT 50'-100' INTERVALS.

SILT FENCE BARRIER

SCALE: NONE
EC-107

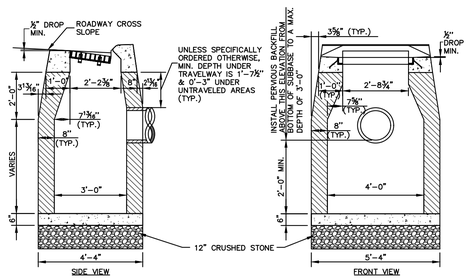

GENERAL NOTES

1. FRAME AND GRATE SHALL BE CONSTRUCTED PER SPECIFICATIONS.
2. ALL FACES OF STRUCTURES IN CONTACT WITH PAVEMENT SHALL BE COVERED WITH TAR PAPER OR APPROVED EQUAL.
3. TO CONVEY SUBSURFACE DRAINAGE, OPENINGS SHALL BE FORMED IN THE FOUR WALLS AT OR IMMEDIATELY ABOVE THE BOTTOM OF PERVIOUS BACKFILL.
4. WALL THICKNESS OF ALL CB'S OVER 10' DEEP SHALL BE INCREASED TO 12" THICK. INSIDE DIMENSION SHALL REMAIN THE SAME. (12" THICKNESS WILL START AFTER THE FIRST 10').
5. USE APPROPRIATE CONCRETE TOP FOR CURBING SHOWN ON PLANS, OR AS DIRECTED BY THE ENGINEER.
6. MINIMUM CONCRETE COMPRESSIVE STRENGTH OF F'c = 4000 PSI SHALL BE OBTAINED PRIOR TO SHIPPING.

TYPE "C" CATCH BASIN

SCALE: NONE
STM-101-CT

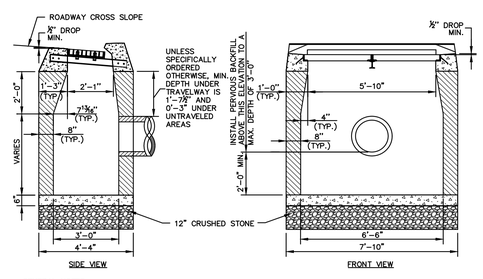

GENERAL NOTES

1. FRAME AND GRATE SHALL BE CONSTRUCTED PER SPECIFICATIONS.
2. ALL FACES OF STRUCTURES IN CONTACT WITH PAVEMENT SHALL BE COVERED WITH TAR PAPER OR APPROVED EQUAL.
3. TO CONVEY SUBSURFACE DRAINAGE, OPENINGS SHALL BE FORMED IN THE FOUR WALLS AT OR IMMEDIATELY ABOVE THE BOTTOM OF PERVIOUS BACKFILL.
4. WALL THICKNESS OF ALL CB'S OVER 10' DEEP SHALL BE INCREASED TO 12" THICK. INSIDE DIMENSION SHALL REMAIN THE SAME. (12" THICKNESS WILL START AFTER THE FIRST 10').
5. USE APPROPRIATE CONCRETE TOP FOR CURBING SHOWN ON PLANS, OR AS DIRECTED BY THE ENGINEER.
6. MINIMUM CONCRETE COMPRESSIVE STRENGTH OF F'c = 4000 PSI SHALL BE OBTAINED PRIOR TO SHIPPING.

TYPE "C" CATCH BASIN DOUBLE GRATE TYPE II

SCALE: NONE
STM-106-CT

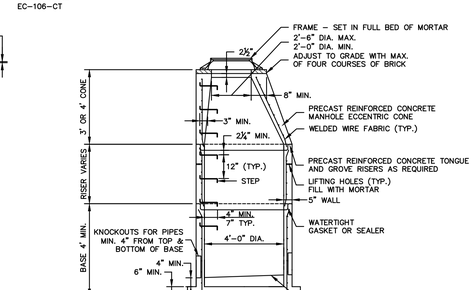

GENERAL NOTES

1. FRAME AND GRATE SHALL BE CONSTRUCTED PER SPECIFICATIONS.
2. ALL FACES OF STRUCTURES IN CONTACT WITH PAVEMENT SHALL BE COVERED WITH TAR PAPER OR APPROVED EQUAL.
3. TO CONVEY SUBSURFACE DRAINAGE, OPENINGS SHALL BE FORMED IN THE FOUR WALLS AT OR IMMEDIATELY ABOVE THE BOTTOM OF PERVIOUS BACKFILL.
4. WALL THICKNESS OF ALL CB'S OVER 10' DEEP SHALL BE INCREASED TO 12" THICK. INSIDE DIMENSION SHALL REMAIN THE SAME. (12" THICKNESS WILL START AFTER THE FIRST 10').
5. MINIMUM CONCRETE COMPRESSIVE STRENGTH OF F'c = 4000 PSI SHALL BE OBTAINED PRIOR TO SHIPPING.

STORM DRAINAGE MANHOLE

SCALE: NONE
STM-109-CT

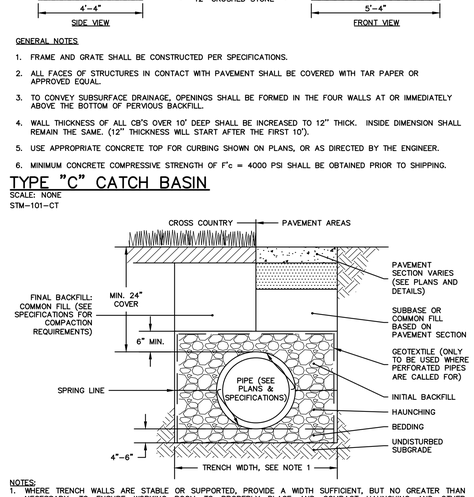

NOTES:

1. WHERE TRENCH WALLS ARE STABLE OR SUPPORTED, PROVIDE A WIDTH SUFFICIENT, BUT NO GREATER THAN NECESSARY, TO ENSURE WORKING ROOM TO PROPERLY PLACE AND COMPACT HAUNCHING AND OTHER EMBEDMENT MATERIALS. UNLESS OTHERWISE SPECIFIED BY THE PIPE MANUFACTURER, THE SPACE BETWEEN THE PIPE AND TRENCH WALL MUST BE WIDER THAN THE COMPACTION EQUIPMENT USED IN THE PIPE ZONE. MINIMUM WIDTH SHALL BE NOT LESS THAN THE GREATER OF EITHER THE PIPE OUTSIDE DIAMETER PLUS 16 INCHES OR THE PIPE OUTSIDE DIAMETER TIMES 1.25, PLUS 12 INCHES.
2. WHERE PERFORATED PIPES ARE CALLED-FOR, BEDDING, HAUNCHING, AND INITIAL BACKFILL SHALL BE CONNDOT NO. 6 CRUSHED STONE SHALL MEET THE REQUIREMENTS OF FORM 816 M.08.
3. WHERE THE TRENCH BOTTOM IS UNSTABLE, THE CONTRACTOR SHALL EXCAVATE TO A DEPTH REQUIRED BY THE ENGINEER AND REPLACE WITH SUITABLE MATERIAL PER THE SPECIFICATIONS, AS AN ALTERNATIVE, AND AT THE DISCRETION OF THE ENGINEER, THE TRENCH BOTTOM MAY BE STABILIZED USING A GEOTEXTILE MATERIAL UNDER SOME CIRCUMSTANCES.
4. BEDDING, HAUNCHING, AND INITIAL BACKFILL SHALL BE CONNDOT NO. 6, NO. 67, OR NO. 8 AGGREGATE OR OTHER MATERIALS MEETING THE REQUIREMENTS OF ASTM D2321 FOR CLASS IA, IB, II, OR III UNLESS OTHERWISE INDICATED BY THE PIPE MANUFACTURER.

TYPICAL TRENCH SECTION - THERMOPLASTIC DRAINAGE PIPE

SCALE: NONE

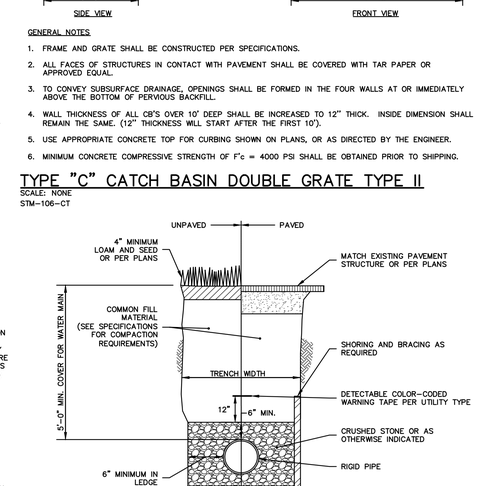

NOTES:

1. SHORING AND BRACING OF TRENCHES IS THE RESPONSIBILITY OF THE CONTRACTOR. ALL SHORING AND BRACING SHALL BE IN ACCORDANCE WITH THE LATEST OSHA STANDARDS AND INTERPRETATIONS, TO ALL OTHER APPLICABLE CODES, RULES, AND REQULATIONS, OF FEDERAL STATE AND LOCAL AUTHORITIES, AND AS REQUIRED TO MAINTAIN SAFE WORKING CONDITIONS AT ALL TIMES.
2. ANY DISTURBED SUBGRADE SHALL BE WELL COMPACTED. EXCAVATION IN ROCK SHALL BE A MINIMUM 6-INCHES BELOW BOTTOM OF BEDDING AND BACKFILLED WITH GRANULAR FILL OR OTHER APPROVED MATERIAL.
3. IN CASE OF CONFLICT BETWEEN THIS DETAIL AND INSTALLATION REQUIREMENTS OF THE PIPE MANUFACTURER OR LOCAL UTILITY OWNER, INSTALLATION REQUIREMENTS OF THE PIPE MANUFACTURER OR LOCAL UTILITY OWNER WILL PREVAIL.

TYPICAL PIPE TRENCH - RIGID PIPE

SCALE: NONE

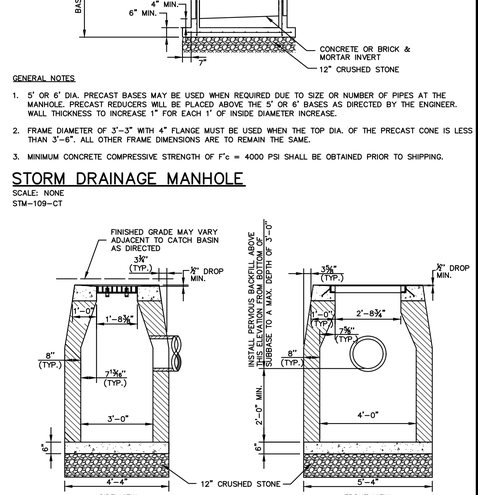

GENERAL NOTES

1. 5' OR 6' DIA. PRECAST BASES MAY BE USED WHEN REQUIRED DUE TO SIZE OR NUMBER OF PIPES AT THE MANHOLE. PRECAST REDUCERS WILL BE PLACED ABOVE THE 5' OR 6' BASES AS DIRECTED BY THE ENGINEER. WALL THICKNESS TO INCREASE 1" FOR EACH 1' OF INSIDE DIAMETER INCREASE.
2. FRAME DIAMETER OF 3'-3" WITH 4" FLANGE MUST BE USED WHEN THE TOP DIA. OF THE PRECAST CONE IS LESS THAN 3'-6". ALL OTHER FRAME DIMENSIONS ARE TO REMAIN THE SAME.
3. MINIMUM CONCRETE COMPRESSIVE STRENGTH OF F'c = 4000 PSI SHALL BE OBTAINED PRIOR TO SHIPPING.

STORM DRAINAGE MANHOLE

SCALE: NONE
STM-102-CT

ISSUED FOR PERMITTING

APPROVED BY THE MANSFIELD PLANNING & ZONING COMMISSION

CHAIRMAN - PLANNING AND ZONING COMMISSION DATE

EAGLEVILLE GREEN - NOVEMBER 25, 2019

STATE OF CONNECTICUT ROBERT S. NEWTON No. 20662 LICENSED PROFESSIONAL ENGINEER

ROBERT NEWTON, PE No. 20662

EAGLEVILLE GREEN

113-121 SOUTH EAGLEVILLE ROAD
IN
MANSFIELD
CONNECTICUT

DETAILS

NOVEMBER 25, 2019

REVISIONS:

1	01/20/2020	PER TOWN COMMENTS
2	01/31/2020	PER TOWN COMMENTS
3	02/12/2020	PER TEST PIT RESULTS

PREPARED FOR:
MANSFIELD HOUSING DEV. CORP.
309 MAPLE ROAD
STORRS, CT 06268

BSC GROUP
300 Winding Brook Drive
Glastonbury, Connecticut 06033
860 652 8227

© 2019 BSC GROUP, INC.

SCALE: AS SHOWN

FILE: 8374900-DET.DWG
DWG. NO:
JOB. NO: 83749.00
C-6.0

OUTLET CONTROL STRUCTURE	ORIFICE "A"		ORIFICE "B"		ELEV. "C"		ELEV. "D"	
	DIA.	INV.	DIA.	INV.	DIA.	INV.	DIA.	INV.
#1	6"	614.30'	N/A	N/A	15"	616.00'	15"	614.05'
#2	6"	614.72'	8"	615.33'	10"	617.00'	15"	613.25'

NOTES:
1. DESIGN TO CONFORM TO H-20 LOADING.
2. THE INLET PIPE CONNECTING THE OUTLET CONTROL STRUCTURE TO THE DETENTION SYSTEM SHALL BE SET AT 0.003% SLOPE.

GENERAL NOTES:
1. THIS DETAIL IS INTENDED TO PROVIDE BASIS FOR DESIGN AND SHOULD BE CONSIDERED GRAPHICAL IN NATURE. CONTRACTOR SHALL SUBMIT SHOP DRAWINGS OF A COMPLETE DESIGN FOR APPROVAL PRIOR TO INSTALLATION.
2. RETAINING COLLAR AND PLATE SHALL BE TYPE 304 STAINLESS STEEL.

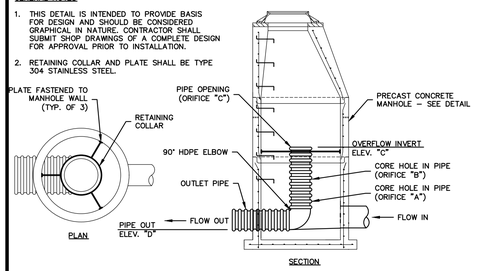

OUTLET CONTROL STRUCTURE

SCALE: NONE

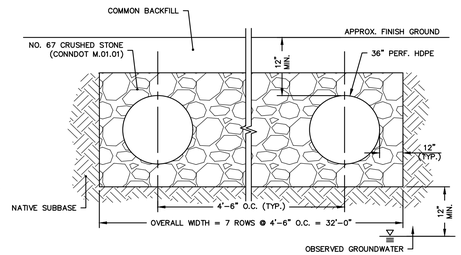

NOTE:
1. PERFORATED PIPE SHALL BE WRAPPED IN GEOTEXTILE FABRIC.

36" PIPE DETENTION SECTION

SCALE: NONE

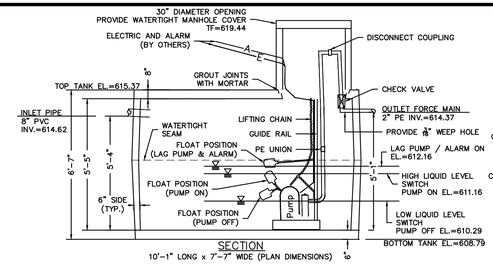

PRECAST CONCRETE PUMP CHAMBER NOTES:
1. TANK SIZE = 4 HOURS OF STORAGE = 10,950 GPD x 4 Hrs = 1,825. USE 2,000.
2. TANK DESIGN SHALL CONFORM TO LATEST ASTM DESIGNATION C913.
3. JOINT SEALANT: BUTYL RUBBER MASTIC TYPE SEAL THAT CONFORMS TO LATEST AASHTO SPECIFICATION M-198, MEETS FEDERAL SPECIFICATIONS SS-S-0021 (210-A).
4. PIPE INLET AND OUTLET LOCATIONS SHALL HAVE POLYLOK II PIPE SEALS.
5. TANK EXTERIOR SHALL BE COATED WITH BAY OIL, "EBONY" OR APPROVED EQUAL.
6. THE TANK INTERIOR SHALL BE COATED WITH FLOROK EPOXY OR EQUAL.
7. REINFORCING STEEL DEFORMED BARS SHALL CONFORM TO LATEST ASTM SPECIFICATION A615.
8. CONCRETE COMPRESSIVE STRENGHT – 4,000 PSI AT 28 DAYS.
9. METHOD OF MANUFACTURE: WET CAST.
10. SECTION SHALL BE MONOLITHIC.
11. CHAMBER TO BE DESIGNED FOR HS-20 LOADING.

PUMP DESIGN NOTES:
1. PUMPS SHALL BE LIBERTY PUMPS MODEL LSG200-SERIES SEWAGE GRINDER PUMP OR APPROVED EQUAL.
2. PUMP CYCLE DESIGNED FOR 10 MINUTES AT 50 GPM WITH 3 FEET OF STATIC HEAD.
3. PUMPS TO BE CONFIGURED WITH DUPLEX ELECTRICAL ALTERNATOR CONTROL PANEL.
4. ALL PUMPS AND APPURTENANCES TO BE INSTALLED TO MANUFACTURERS SPECIFICATIONS AND APPLICABLE BUILDING ELECTRICAL CODES.
5. PUMP AND FORCE MAIN SHALL BE CONFIGURED SUCH THAT THE FORCE MAIN WILL COMPLETELY DRAIN ONCE THE PUMP SHUTS OFF.
6. ROUTING OF ELECTRIC AND ALARM TO BE BY OTHERS.
7. CONTRACTOR SHALL SUBMIT A COMPLETE PUMPING SYSTEM SHOP DRAWING PACKAGE FOR REVIEW BY THE ENGINEER.

2,000 GALLON SEWAGE PUMP STATION

SCALE: NONE

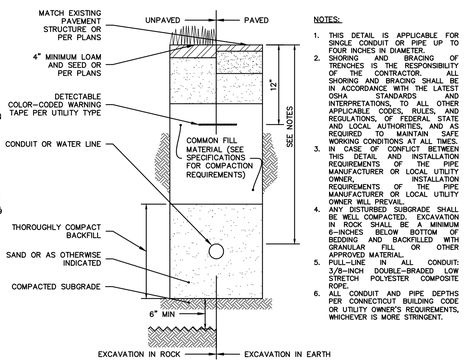

NOTES:
1. THIS DETAIL IS APPLICABLE FOR SINGLE CONDUIT OR PIPE UP TO FOUR INCHES IN DIAMETER.
2. SHORING AND BRACING OF TRENCHES IS THE RESPONSIBILITY OF THE CONTRACTOR. ALL SHORING AND BRACING SHALL BE IN ACCORDANCE WITH THE LATEST OSHA STANDARDS AND INTERPRETATIONS, TO ALL OTHER APPLICABLE CODES, RULES, AND REGULATIONS, OF FEDERAL STATE AND LOCAL AUTHORITIES, AND AS REQUIRED TO MAINTAIN SAFE WORKING CONDITIONS AT ALL TIMES.
3. IN CASE OF CONFLICT BETWEEN THIS DETAIL AND INSTALLATION REQUIREMENTS OF THE PIPE MANUFACTURER OR LOCAL UTILITY OWNER, INSTALLATION REQUIREMENTS OF THE PIPE MANUFACTURER OR LOCAL UTILITY OWNER WILL PREVAIL.
4. ANY DISTURBED SUBGRADE SHALL BE WELL COMPACTED. EXCAVATION IN ROCK SHALL BE A MINIMUM 6-INCHES BELOW BOTTOM OF BEDDING AND BACKFILLED WITH GRANULAR FILL OR OTHER APPROVED MATERIAL.
5. PULL-LINE IN ALL CONDUIT: 3/8-INCH DOUBLE-BRADED LOW STRETCH POLYESTER COMPOSITE ROPE.
6. ALL CONDUIT AND PIPE DEPTHS BE WELL COMPACTED. EXCAVATION IN ROCK SHALL BE A MINIMUM 6-INCHES BELOW BOTTOM OF BEDDING AND BACKFILLED WITH GRANULAR FILL OR OTHER APPROVED MATERIAL, WHICHEVER IS MORE STRINGENT.

CONDUIT OR WATER SERVICE TRENCH

SCALE: NONE

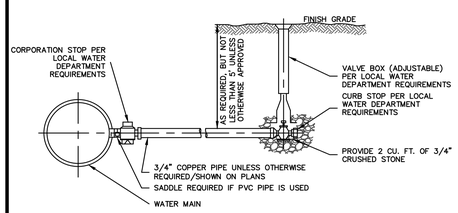

WATER SERVICE CONNECTION

SCALE: NONE
WTR-104-CT

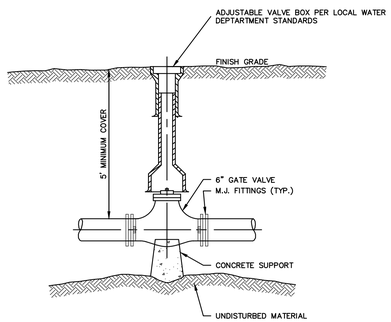

GATE VALVE

SCALE: NONE
WTR-102-CT

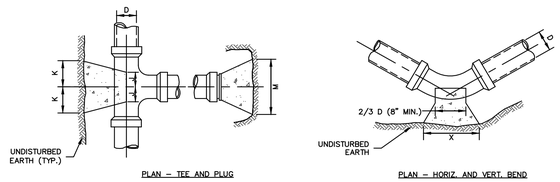

SIZE OF BRANCH	J	K	L	M	N	O
4" TO 8"	10"	10"	1'-0"	2'-0"	1'-6"	10"
10" TO 16"	1'-0"	1'-6"	1'-8"	3'-10"	2'-10"	1'-6"
24"	1'-4"	2'-0"	2'-6"	5'-0"	3'-6"	1'-8"

TEES AND PLUGS

	90° & 45°			22½° & 11¼°		
D	4" TO 8"	10" TO 16"	24"	4" TO 8"	10" TO 16"	24"
X	1'-8"	3'-4"	3'-6"	1'-4"	2'-0"	3'-6"
Y	1'-2"	1'-8"	2'-4"	1'-0"	1'-2"	2'-4"

BENDS

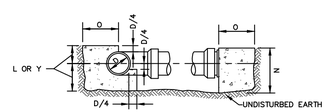

TYPICAL SECTION – TEES, BENDS AND PLUGS

GENERAL NOTES
1. PROVIDE CONCRETE THRUST BLOCKS AT ALL BENDS, DEAD ENDS, & TEES UNLESS OTHERWISE DIRECTED. CONCRETE FOR ALL THRUST BLOCKS TO BE PLACED AGAINST FIRM, UNDISTURBED EARTH. PROVIDE APPROVED ANCHOR HARNESS RODS AND SOCKET CLAMPS AS SPECIFIED AND IN ACCORDANCE WITH PIPE MANUFACTURERS RECOMMENDATIONS WHERE SOIL HAS BEEN DISTURBED OR THRUST BLOCKS CANNOT BE USED.
2. ALL SOCKET CLAMP METAL SHALL BE COATED WITH BLACK ASPHALTUM OR OTHER WATER DEPARTMENT APPROVED COATINGS.
3. CONCRETE THRUST BLOCKS POURED BEHIND 3-WAY TEE AND HYDRANT SHOE TO BE USED WITH SOCKET CLAMPS.
4. NO CONCRETE SHALL COVER PIPE JOINTS, FITTING JOINTS, BOLTS OR HYDRANT DRAINS.

CONCRETE THRUST BLOCK FOR PRESSURE PIPE

SCALE: NONE
WTR-105-CT

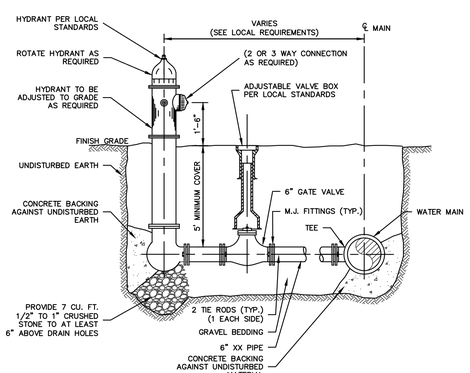

FIRE HYDRANT & VALVE

SCALE: NONE
WTR-103-CT

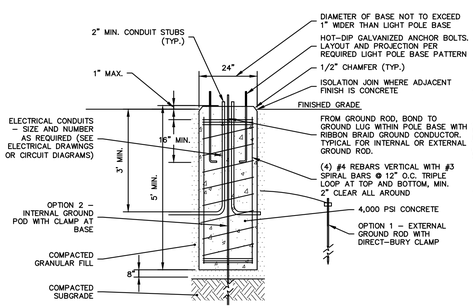

NOTES:
1. REINFORCING BARS SHALL BE DEFORMED BAR, ASTM A615 GRADE 60.
2. CONDUIT LOCATIONS SHOWN ARE CONCEPTUAL. REFER TO ELECTRICAL DRAWINGS OR CIRCUIT DIAGRAMS FOR THE NUMBER, SIZES, AND ORIENTATION REQUIRED.
3. ALL GROUND RODS SHALL BE COPPER-COATED. DIAMETER AND LENGTH PER APPLICABLE CODES. GROUNDING WIRE SHALL BE No. 4 AWG STRANDED COPPER WIRE UNLESS OTHERWISE SPECIFIED.
4. ANCHOR BOLTS SHOWN ARE CONCEPTUAL. ANCHOR BOLT SPECIFICATIONS SHALL MEET THE POLE MANUFACTURER'S REQUIREMENTS FOR SIZE, LENGTH, AND GRADE, BASED ON POLE TYPE, HEIGHT, AND FIXTURE(S).

LIGHT POLE BASE

SCALE: NONE

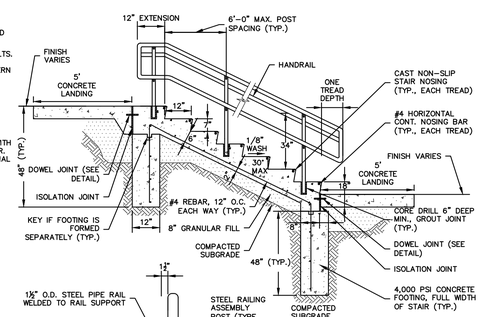

NOTES:
1. COMPLY WITH ICC/ANSI A117.1 CHAPTER 5.
2. SUBMIT DETAILED SHOP DRAWINGS FOR APPROVAL SHOWING THE LAYOUT AND DIMENSIONS OF ALL STAIR SYSTEM COMPONENTS.
3. EXPOSED SURFACES TO BE BRUSHED FINISH TROWELED EDGES.
4. MINIMUM WIDTH TO BE 48" CLEAR HANDRAIL TO HANDRAIL.
5. MAXIMUM RADIUS OF CURVATURE AT THE LEADING EDGE OF TREADS SHALL BE 1/2".
6. CONSTRUCT CONCRETE LANDINGS PER SIDEWALK DETAIL.

CONCRETE STAIRS

SCALE: NONE

ISSUED FOR PERMITTING

APPROVED BY THE MANSFIELD PLANNING & ZONING COMMISSION

CHAIRMAN - PLANNING AND ZONING COMMISSION _____ DATE _____

EAGLEVILLE GREEN - NOVEMBER 25, 2019

STATE OF CONNECTICUT ROBERT S. NEWTON No. 20662 LICENSED PROFESSIONAL ENGINEER

ROBERT NEWTON, PE No. 20662

EAGLEVILLE GREEN

113-121 SOUTH EAGLEVILLE ROAD
IN
MANSFIELD
CONNECTICUT

DETAILS

NOVEMBER 25, 2019

REVISIONS:

1	01/20/2020	PER TOWN COMMENTS
2	01/31/2020	PER TOWN COMMENTS
3	02/12/2020	PER TEST PIT RESULTS

PREPARED FOR:
MANSFIELD HOUSING DEV. CORP.
309 MAPLE ROAD
STORRS, CT 06268

BSC GROUP
300 Winding Brook Drive
Glastonbury, Connecticut 06033
860 652 8227

© 2019 BSC GROUP, INC.

SCALE: AS SHOWN

FILE: 8374900-DET.DWG
DWG. NO: C-6.1
JOB. NO: 83749.00

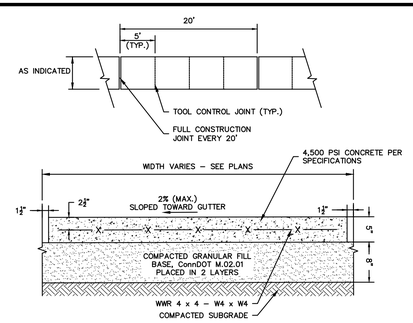

NOTES:

1. TOOLED CONTROL JOINTS SHALL BE 1/4 SLAB THICKNESS. TOOL JOINTS EARLY IN THE FINISHING PROCESS AND RE-RUN TO ENSURE GROOVE BOND HAS NOT OCCURRED.
2. FULL-DEPTH JOINTS SHALL INCORPORATE FULL-DEPTH JOINT FILLER PER SPECIFICATIONS AND DETAILS.
3. SIDEWALK SHALL HAVE LIGHT BROOM FINISH PERPENDICULAR TO THE DIRECTION OF TRAVEL.

CONCRETE SIDEWALK

SCALE: NONE

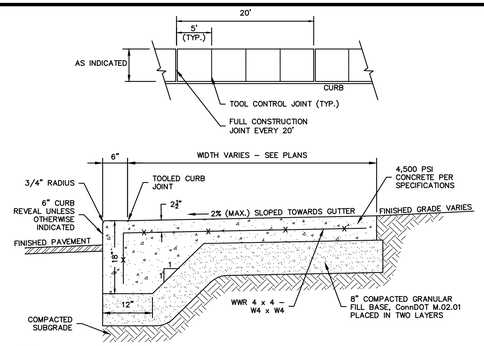

NOTES:

1. CURB REVEAL DIMENSION MAY VARY, SEE PLANS.
2. TOOLED CONTROL JOINTS SHALL BE 1/4 SLAB THICKNESS. TOOL JOINTS EARLY IN THE FINISHING PROCESS AND RE-RUN TO ENSURE GROOVE BOND HAS NOT OCCURRED.
3. TOOLED CURB JOINT SHALL BE 1/4-INCH DEEP MAX.
4. CONSTRUCTION JOINTS SHALL INCORPORATE FULL-DEPTH JOINT FILLER PER SPECIFICATIONS AND DETAILS.
5. SIDEWALKS SHALL HAVE LIGHT BROOM FINISH PERPENDICULAR TO THE DIRECTION OF TRAVEL.

MONOLITHIC CONCRETE CURB AND SIDEWALK

SCALE: NONE

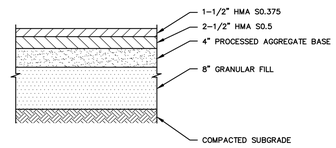

BITUMINOUS CONCRETE PAVEMENT

SCALE: NONE

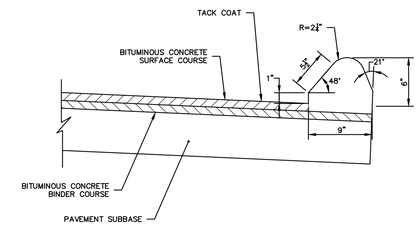

6" BITUMINOUS CONCRETE LIP CURBING

SCALE: NONE
CRB-103-CT

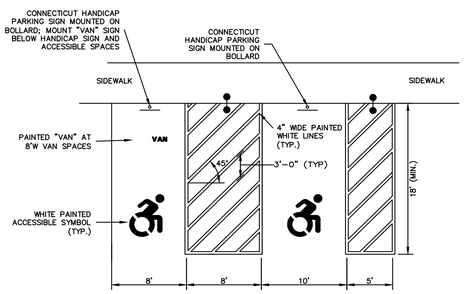

NOTES:

1. GRADING WITHIN HANDICAP SPACES SHALL BE LESS THAN 2.00% IN ALL DIRECTIONS
2. SIGN LOCATION VARIES – SEE PLAN

ACCESSIBLE PARKING SPACES

SCALE: NONE

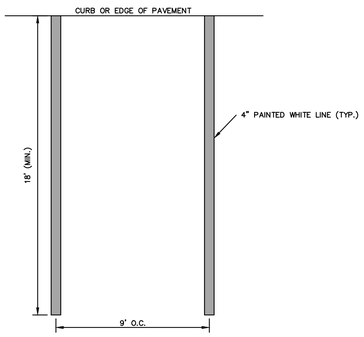

STANDARD PAINTED PARKING MARKINGS

SCALE: NONE

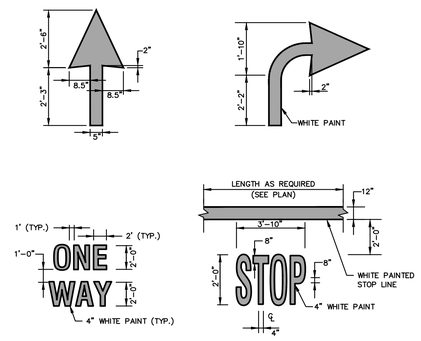

NOTES:

1. PAVEMENT MARKINGS SHOWN SHALL NOT BE INSTALLED ON PUBLIC ROADWAYS.

PAINTED PAVEMENT MARKINGS

SCALE: NONE
PVT-104-CT

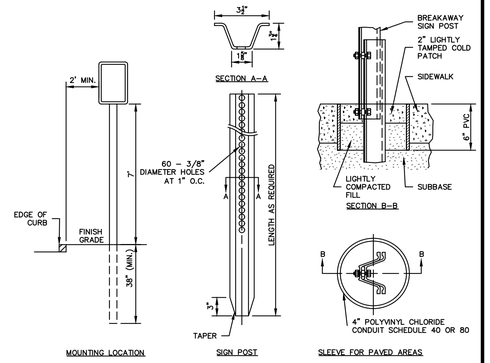

NOTES:

1. MOUNT SIGN TO POST PER CONNDOT 816 SPECIFICATIONS AND DETAILS.
2. PROVIDE SLEEVE FOR ALL SIGNS MOUNTED IN CONCRETE.

TYPICAL SIGN SUPPORT – BREAKAWAY TYPE II

SCALE: NONE

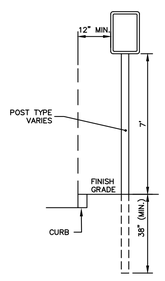

POST-MOUNTED SIGN

SCALE: NONE

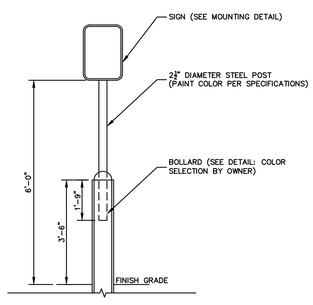

BOLLARD-MOUNTED SIGN

SCALE: NONE

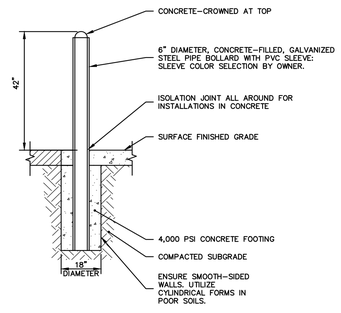

CONCRETE-FILLED STEEL BOLLARD

SCALE: NONE

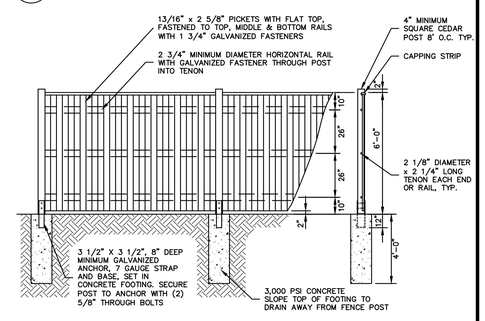

GENERAL NOTES

1. ALL FENCING MATERIAL SHALL BE TREATED NORTHERN WHITE CEDAR, TO THE DIMENSIONS SHOWN ON THE DRAWING.
2. LINE FENCE TOP AND BOTTOM SHALL BE INSTALLED STRAIGHT AND TRUE. ALL POSTS AND FACING BOARDS OR SLATS SHALL BE INSTALLED PARALLEL AND PLUMB. ALL RAILS SHALL BE INSTALLED PARALLEL AND TRUE.
3. ALL GATE HARDWARE SHALL BE DOUBLE DIP HOT GALVANIZED. THE CONTRACTOR SHALL SUBMIT GATE AND FENCE SHOP DRAWINGS TO THE ENGINEER FOR REVIEW.

6' SINGLE SIDED WOOD FENCE

SCALE: NONE
FSN-105-CT

ISSUED FOR PERMITTING

APPROVED BY THE MANSFIELD PLANNING & ZONING COMMISSION

CHAIRMAN - PLANNING AND ZONING COMMISSION _____ DATE _____

EAGLEVILLE GREEN - NOVEMBER 25, 2019

STATE OF CONNECTICUT ROBERT S. NEWTON No. 20662 LICENSED PROFESSIONAL ENGINEER

ROBERT NEWTON, PE No. 20662

EAGLEVILLE GREEN

113-121 SOUTH EAGLEVILLE ROAD
IN
MANSFIELD
CONNECTICUT

DETAILS

NOVEMBER 25, 2019

REVISIONS:

1	01/20/2020	PER TOWN COMMENTS
2	01/31/2020	PER TOWN COMMENTS
3	02/12/2020	PER TEST PIT RESULTS

PREPARED FOR:
MANSFIELD HOUSING DEV. CORP.
309 MAPLE ROAD
STORRS, CT 06268

BSC GROUP
300 Winding Brook Drive
Glastonbury, Connecticut 06033
860 652 8227

© 2019 BSC GROUP, INC.

SCALE: AS SHOWN

FILE: 8374900-DET.DWG
DWG. NO: C-6.2
JOB. NO: 83749.00

ADVANCED DRAINAGE SYSTEMS, INC.

STORMTECH CHAMBER SPECIFICATIONS

1. CHAMBERS SHALL BE STORMTECH MC-4500.
2. CHAMBERS SHALL BE MANUFACTURED FROM VIRGIN, IMPACT-MODIFIED POLYPROPYLENE COPOLYMERS.
3. CHAMBER ROWS SHALL PROVIDE CONTINUOUS, UNOBSTRUCTED INTERNAL SPACE WITH NO INTERNAL SUPPORT PANELS THAT WOULD IMPEDE FLOW OR LIMIT ACCESS FOR INSPECTION.
4. THE STRUCTURAL DESIGN OF THE CHAMBERS, THE STRUCTURAL BACKFILL, AND THE INSTALLATION REQUIREMENTS SHALL ENSURE THAT THE LOAD FACTORS SPECIFIED IN THE AASHTO LRFD BRIDGE DESIGN SPECIFICATIONS, SECTION 12.12, ARE MET FOR: 1) LONG-DURATION DEAD LOADS AND 2) SHORT-DURATION LIVE LOADS, BASED ON THE AASHTO DESIGN TRUCK WITH CONSIDERATION FOR IMPACT AND MULTIPLE VEHICLE PRESENCES.
5. CHAMBERS SHALL MEET THE REQUIREMENTS OF ASTM F2418-16, "STANDARD SPECIFICATION FOR POLYPROPYLENE (PP) CORRUGATED WALL STORMWATER COLLECTION CHAMBERS".
6. CHAMBERS SHALL BE DESIGNED AND ALLOWABLE LOADS DETERMINED IN ACCORDANCE WITH ASTM F2787, "STANDARD PRACTICE FOR STRUCTURAL DESIGN OF THERMOPLASTIC CORRUGATED WALL STORMWATER COLLECTION CHAMBERS".
7. ONLY CHAMBERS THAT ARE APPROVED BY THE SITE DESIGN ENGINEER WILL BE ALLOWED. THE CHAMBER MANUFACTURER SHALL SUBMIT THE FOLLOWING UPON REQUEST TO THE SITE DESIGN ENGINEER FOR APPROVAL BEFORE DELIVERING CHAMBERS TO THE PROJECT SITE:
   a. A STRUCTURAL EVALUATION SEALED BY A REGISTERED PROFESSIONAL ENGINEER THAT DEMONSTRATES THAT THE SAFETY FACTORS ARE GREATER THAN OR EQUAL TO 1.95 FOR DEAD LOAD AND 1.75 FOR LIVE LOAD, THE MINIMUM REQUIRED BY ASTM F2787 AND BY AASHTO FOR THERMOPLASTIC PIPE.
   b. A STRUCTURAL EVALUATION SEALED BY A REGISTERED PROFESSIONAL ENGINEER THAT DEMONSTRATES THAT THE LOAD FACTORS SPECIFIED IN THE AASHTO LRFD BRIDGE DESIGN SPECIFICATIONS, SECTION 12.12, ARE MET. THE 50 YEAR CREEP MODULUS DATA SPECIFIED IN ASTM F2418 MUST BE USED AS PART OF THE AASHTO STRUCTURAL EVALUATION TO VERIFY LONG-TERM PERFORMANCE.
   c. STRUCTURAL CROSS SECTION DETAIL ON WHICH THE STRUCTURAL EVALUATION IS BASED.
8. CHAMBERS AND END CAPS SHALL BE PRODUCED AT AN ISO 9001 CERTIFIED MANUFACTURING FACILITY.

IMPORTANT - NOTES FOR THE BIDDING AND INSTALLATION OF MC-4500 CHAMBER SYSTEM

1. STORMTECH MC-4500 CHAMBERS SHALL NOT BE INSTALLED UNTIL THE MANUFACTURER'S REPRESENTATIVE HAS COMPLETED A PRE-CONSTRUCTION MEETING WITH THE INSTALLERS.
2. STORMTECH MC-4500 CHAMBERS SHALL BE INSTALLED IN ACCORDANCE WITH THE "STORMTECH MC-3500/MC-4500 CONSTRUCTION GUIDE".
3. CHAMBERS ARE NOT TO BE BACKFILLED WITH A DOZER OR EXCAVATOR SITUATED OVER THE CHAMBERS. STORMTECH RECOMMENDS 3 BACKFILL METHODS:
   - STONESHOOTER LOCATED OFF THE CHAMBER BED.
   - BACKFILL AS ROWS ARE BUILT USING AN EXCAVATOR ON THE FOUNDATION STONE OR SUBGRADE.
   - BACKFILL FROM OUTSIDE THE EXCAVATION USING A LONG BOOM HOE OR EXCAVATOR.
4. THE FOUNDATION STONE SHALL BE LEVELED AND COMPACTED PRIOR TO PLACING CHAMBERS.
5. JOINTS BETWEEN CHAMBERS SHALL BE PROPERLY SEATED PRIOR TO PLACING STONE.
6. MAINTAIN MINIMUM 9" (230 mm) SPACING BETWEEN THE CHAMBER ROWS.
7. INLET AND OUTLET MANIFOLDS MUST BE INSERTED A MINIMUM OF 12" (300 mm) INTO CHAMBER END CAPS.
8. EMBEDMENT STONE SURROUNDING CHAMBERS MUST BE A CLEAN, CRUSHED, ANGULAR STONE MEETING THE AASHTO M43 DESIGNATION OF #3 OR #4.
9. STONE SHALL BE BROUGHT UP EVENLY AROUND CHAMBERS SO AS NOT TO DISTORT THE CHAMBER SHAPE. STONE DEPTHS SHOULD NEVER DIFFER BY MORE THAN 12" (300 mm) BETWEEN ADJACENT CHAMBER ROWS.
10. STONE MUST BE PLACED ON THE TOP CENTER OF THE CHAMBER TO ANCHOR THE CHAMBERS IN PLACE AND PRESERVE ROW SPACING.
11. THE CONTRACTOR MUST REPORT ANY DISCREPANCIES WITH CHAMBER FOUNDATION MATERIAL BEARING CAPACITIES TO THE SITE DESIGN ENGINEER.
12. ADS RECOMMENDS THE USE OF "FLEXSTORM CATCH IT" INSERTS DURING CONSTRUCTION FOR ALL INLETS TO PROTECT THE SUBSURFACE STORMWATER MANAGEMENT SYSTEM FROM CONSTRUCTION SITE RUNOFF.

NOTES FOR CONSTRUCTION EQUIPMENT

1. STORMTECH MC-4500 CHAMBERS SHALL BE INSTALLED IN ACCORDANCE WITH THE "STORMTECH MC-3500/MC-4500 CONSTRUCTION GUIDE".
2. THE USE OF EQUIPMENT OVER MC-4500 CHAMBERS IS LIMITED:
   - NO EQUIPMENT IS ALLOWED ON BARE CHAMBERS.
   - NO RUBBER TIRED LOADER, DUMP TRUCK, OR EXCAVATORS ARE ALLOWED UNTIL PROPER FILL DEPTHS ARE REACHED IN ACCORDANCE WITH THE "STORMTECH MC-3500/MC-4500 CONSTRUCTION GUIDE".
   - WEIGHT LIMITS FOR CONSTRUCTION EQUIPMENT CAN BE FOUND IN THE "STORMTECH MC-3500/MC-4500 CONSTRUCTION GUIDE".
3. FULL 36" (900 mm) OF STABILIZED COVER MATERIALS OVER THE CHAMBERS IS REQUIRED FOR DUMP TRUCK TRAVEL OR DUMPING.

USE OF A DOZER TO PUSH EMBEDMENT STONE BETWEEN THE ROWS OF CHAMBERS MAY CAUSE DAMAGE TO CHAMBERS AND IS NOT AN ACCEPTABLE BACKFILL METHOD. ANY CHAMBERS DAMAGED BY USING THE "DUMP AND PUSH" METHOD ARE NOT COVERED UNDER THE STORMTECH STANDARD WARRANTY.

CONTACT STORMTECH AT 1-888-892-2694 WITH ANY QUESTIONS ON INSTALLATION REQUIREMENTS OR WEIGHT LIMITS FOR CONSTRUCTION EQUIPMENT.

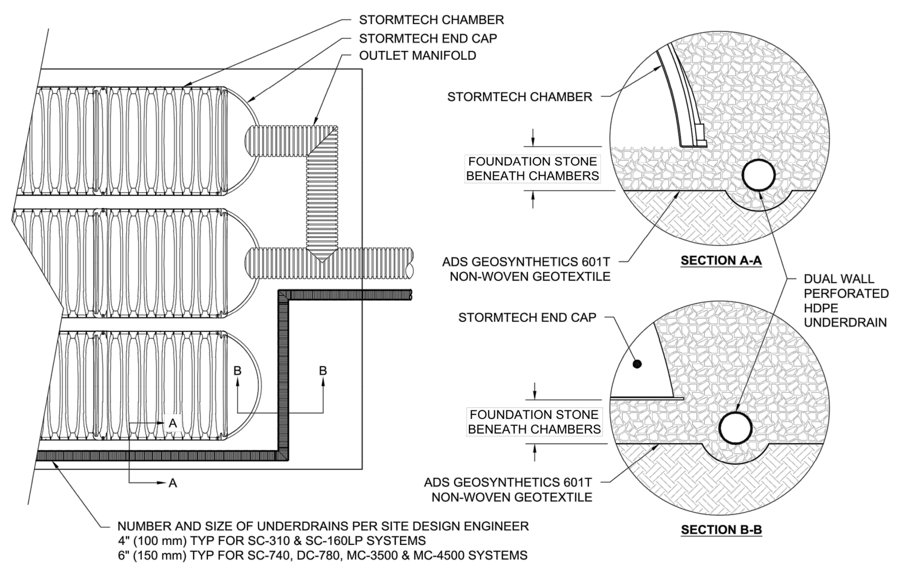

5 UNDERDRAIN DETAIL

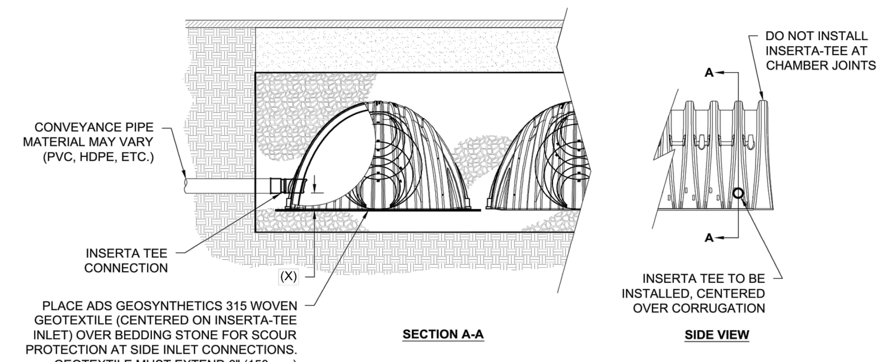

CHAMBER	MAX DIAMETER OF INSERTA TEE	HEIGHT FROM BASE OF CHAMBER (X)
SC-310	6" (150 mm)	4" (100 mm)
SC-740	10" (250 mm)	4" (100 mm)
DC-780	10" (250 mm)	4" (100 mm)
MC-3500	12" (300 mm)	6" (150 mm)
MC-4500	12" (300 mm)	8" (200 mm)
INSERTA TEE FITTINGS AVAILABLE FOR SDR 26, SDR 35, SCH 40 IPS GASKETED & SOLVENT WELD, N-12, HP STORM, C-900 OR DUCTILE IRON		

NOTE:
PART NUMBERS WILL VARY BASED ON INLET PIPE MATERIALS. CONTACT STORMTECH FOR MORE INFORMATION.

6 INSERTA-TEE SIDE INLET DETAIL

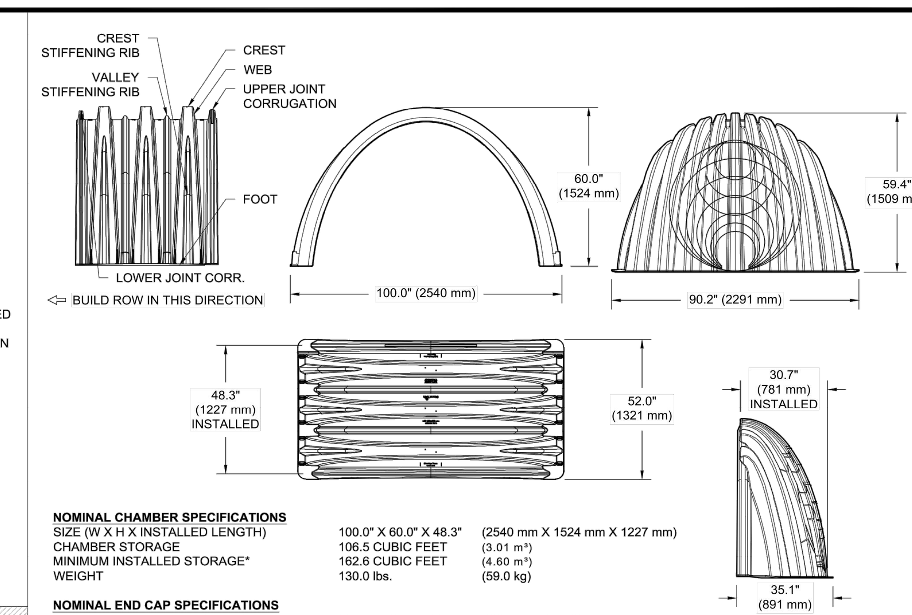

NOMINAL CHAMBER SPECIFICATIONS

SIZE (W X H X INSTALLED LENGTH)	100.0" X 60.0" X 48.3"	(2540 mm X 1524 mm X 1227 mm)
CHAMBER STORAGE	106.5 CUBIC FEET	(3.01 m³)
MINIMUM INSTALLED STORAGE*	162.6 CUBIC FEET	(4.60 m³)
WEIGHT	130.0 lbs.	(59.0 kg)

NOMINAL END CAP SPECIFICATIONS

SIZE (W X H X INSTALLED LENGTH)	90.2" X 59.4" X 30.7"	(2291 mm X 1509 mm X 781 mm)
END CAP STORAGE	35.7 CUBIC FEET	(1.01 m³)
MINIMUM INSTALLED STORAGE*	108.7 CUBIC FEET	(3.08 m³)
WEIGHT	135.0 lbs.	(61.2 kg)

*ASSUMES 12" (305 mm) STONE ABOVE, 9" (229 mm) STONE FOUNDATION AND BETWEEN CHAMBERS, 12" (305 mm) STONE PERIMETER IN FRONT OF END CAPS AND 40% STONE POROSITY.

STUBS AT BOTTOM OF END CAP FOR PART NUMBERS ENDING WITH "B"
STUBS AT TOP OF END CAP FOR PART NUMBERS ENDING WITH "T"
END CAPS WITH A WELDED CROWN PLATE END WITH "C"
END CAPS WITH A PREFABRICATED WELDED STUB END WITH "W"

PART #	STUB	B	C
MC4500REPE06T	6" (150 mm)	42.54" (1.081 m)	---
MC4500REPE06B		---	0.86" (22 mm)
MC4500REPE08T	8" (200 mm)	40.50" (1.029 m)	---
MC4500REPE08B		---	1.01" (26 mm)
MC4500REPE10T	10" (250 mm)	38.37" (975 mm)	---
MC4500REPE10B		---	1.33" (34 mm)
MC4500REPE12T	12" (300 mm)	35.69" (907 mm)	---
MC4500REPE12B		---	1.55" (39 mm)
MC4500REPE15T	15" (375 mm)	32.72" (831 mm)	---
MC4500REPE15B		---	1.70" (43 mm)
MC4500REPE18TC	18" (450 mm)	29.36" (746 mm)	---
MC4500REPE18TW			
MC4500REPE18BC		---	1.97" (50 mm)
MC4500REPE18BW			
MC4500REPE24TC	24" (600 mm)	23.05" (585 mm)	---
MC4500REPE24TW			
MC4500REPE24BC		---	2.26" (57 mm)
MC4500REPE24BW			
MC4500REPE30BC	30" (750 mm)	---	2.95" (75 mm)
MC4500REPE36BC	36" (900 mm)	---	3.25" (83 mm)
MC4500REPE42BC	42" (1050 mm)	---	3.55" (90 mm)

NOTE: ALL DIMENSIONS ARE NOMINAL

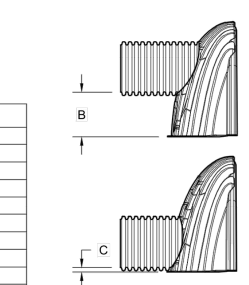

CUSTOM PRECORED INVERTS ARE AVAILABLE UPON REQUEST. INVENTORIED MANIFOLDS INCLUDE 12-24" (300-600 mm) SIZE ON SIZE AND 15-48" (375-1200 mm) ECCENTRIC MANIFOLDS. CUSTOM INVERT LOCATIONS ON THE MC-4500 END CAP CUT IN THE FIELD ARE NOT RECOMMENDED FOR PIPE SIZES GREATER THAN 10" (250 mm). THE INVERT LOCATION IN COLUMN 'B' ARE THE HIGHEST POSSIBLE FOR THE PIPE SIZE.

2 MC-4500 TECHNICAL SPECIFICATIONS

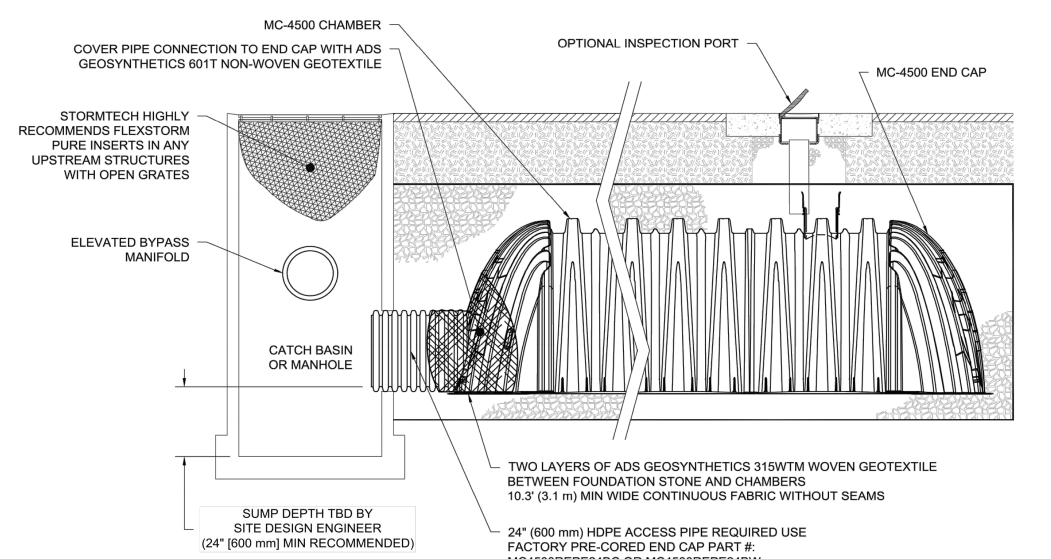

INSPECTION & MAINTENANCE

STEP 1) INSPECT ISOLATOR ROW FOR SEDIMENT
- A. INSPECTION PORTS (IF PRESENT)
  - A.1. REMOVE/OPEN LID ON NYLOPLAST INLINE DRAIN
  - A.2. REMOVE AND CLEAN FLEXSTORM FILTER IF INSTALLED
  - A.3. USING A FLASHLIGHT AND STADIA ROD, MEASURE DEPTH OF SEDIMENT AND RECORD ON MAINTENANCE LOG
  - A.4. LOWER A CAMERA INTO ISOLATOR ROW FOR VISUAL INSPECTION OF SEDIMENT LEVELS (OPTIONAL)
  - A.5. IF SEDIMENT IS AT, OR ABOVE, 3" (80 mm) PROCEED TO STEP 2. IF NOT, PROCEED TO STEP 3.
- B. ALL ISOLATOR ROWS
  - B.1. REMOVE COVER FROM STRUCTURE AT UPSTREAM END OF ISOLATOR ROW
  - B.2. USING A FLASHLIGHT, INSPECT DOWN THE ISOLATOR ROW THROUGH OUTLET PIPE
    - i) MIRRORS ON POLES OR CAMERAS MAY BE USED TO AVOID A CONFINED SPACE ENTRY
    - ii) FOLLOW OSHA REGULATIONS FOR CONFINED SPACE ENTRY IF ENTERING MANHOLE
  - B.3. IF SEDIMENT IS AT, OR ABOVE, 3" (80 mm) PROCEED TO STEP 2. IF NOT, PROCEED TO STEP 3.

STEP 2) CLEAN OUT ISOLATOR ROW USING THE JETVAC PROCESS
- A. A FIXED CULVERT CLEANING NOZZLE WITH REAR FACING SPREAD OF 45" (1.1 m) OR MORE IS PREFERRED
- B. APPLY MULTIPLE PASSES OF JETVAC UNTIL BACKFLUSH WATER IS CLEAN
- C. VACUUM STRUCTURE SUMP AS REQUIRED

STEP 3) REPLACE ALL COVERS, GRATES, FILTERS, AND LIDS; RECORD OBSERVATIONS AND ACTIONS.

STEP 4) INSPECT AND CLEAN BASINS AND MANHOLES UPSTREAM OF THE STORMTECH SYSTEM.

NOTES

1. INSPECT EVERY 6 MONTHS DURING THE FIRST YEAR OF OPERATION. ADJUST THE INSPECTION INTERVAL BASED ON PREVIOUS OBSERVATIONS OF SEDIMENT ACCUMULATION AND HIGH WATER ELEVATIONS.
2. CONDUCT JETTING AND VACTORING ANNUALLY OR WHEN INSPECTION SHOWS THAT MAINTENANCE IS NECESSARY.

3 MC-4500 ISOLATOR ROW DETAIL

ACCEPTABLE FILL MATERIALS: STORMTECH MC-4500 CHAMBER SYSTEMS

	MATERIAL LOCATION	DESCRIPTION	AASHTO MATERIAL CLASSIFICATIONS	COMPACTION / DENSITY REQUIREMENT
D	**FINAL FILL:** FILL MATERIAL FOR LAYER 'D' STARTS FROM THE TOP OF THE 'C' LAYER TO THE BOTTOM OF FLEXIBLE PAVEMENT OR UNPAVED FINISHED GRADE ABOVE. NOTE THAT PAVEMENT SUBBASE MAY BE PART OF THE 'D' LAYER	ANY SOIL/ROCK MATERIALS, NATIVE SOILS, OR PER ENGINEER'S PLANS. CHECK PLANS FOR PAVEMENT SUBGRADE REQUIREMENTS.	N/A	PREPARE PER SITE DESIGN ENGINEER'S PLANS. PAVED INSTALLATIONS MAY HAVE STRINGENT MATERIAL AND PREPARATION REQUIREMENTS.
C	**INITIAL FILL:** FILL MATERIAL FOR LAYER 'C' STARTS FROM THE TOP OF THE EMBEDMENT STONE ('B' LAYER) TO 24" (600 mm) ABOVE THE TOP OF THE CHAMBER. NOTE THAT PAVEMENT SUBBASE MAY BE A PART OF THE 'C' LAYER.	GRANULAR WELL-GRADED SOIL/AGGREGATE MIXTURES, <35% FINES OR PROCESSED AGGREGATE. MOST PAVEMENT SUBBASE MATERIALS CAN BE USED IN LIEU OF THIS LAYER.	AASHTO M145[1] A-1, A-2-4, A-3 OR AASHTO M43[1] 3, 357, 4, 467, 5, 56, 57, 6, 67, 68, 7, 78, 8, 89, 9, 10	BEGIN COMPACTIONS AFTER 24" (600 mm) OF MATERIAL OVER THE CHAMBERS IS REACHED. COMPACT ADDITIONAL LAYERS IN 12" (300 mm) MAX LIFTS TO A MIN. 95% PROCTOR DENSITY FOR WELL GRADED MATERIAL AND 95% RELATIVE DENSITY FOR PROCESSED AGGREGATE MATERIALS.
B	**EMBEDMENT STONE:** FILL SURROUNDING THE CHAMBERS FROM THE FOUNDATION STONE ('A' LAYER) TO THE 'C' LAYER ABOVE.	CLEAN, CRUSHED, ANGULAR STONE	AASHTO M43[1] 3, 4	NO COMPACTION REQUIRED.
A	**FOUNDATION STONE:** FILL BELOW CHAMBERS FROM THE SUBGRADE UP TO THE FOOT (BOTTOM) OF THE CHAMBER.	CLEAN, CRUSHED, ANGULAR STONE	AASHTO M43[1] 3, 4	PLATE COMPACT OR ROLL TO ACHIEVE A FLAT SURFACE.[2,3]

PLEASE NOTE:
1. THE LISTED AASHTO DESIGNATIONS ARE FOR GRADATIONS ONLY. THE STONE MUST ALSO BE CLEAN, CRUSHED, ANGULAR. FOR EXAMPLE, A SPECIFICATION FOR #4 STONE WOULD STATE: "CLEAN, CRUSHED, ANGULAR NO. 4 (AASHTO M43) STONE".
2. STORMTECH COMPACTION REQUIREMENTS ARE MET FOR 'A' LOCATION MATERIALS WHEN PLACED AND COMPACTED IN 9" (230 mm) (MAX) LIFTS USING TWO FULL COVERAGES WITH A VIBRATORY COMPACTOR.
3. WHERE INFILTRATION SURFACES MAY BE COMPROMISED BY COMPACTION, FOR STANDARD DESIGN LOAD CONDITIONS, A FLAT SURFACE MAY BE ACHIEVED BY RAKING OR DRAGGING WITHOUT COMPACTION EQUIPMENT. FOR SPECIAL LOAD DESIGNS, CONTACT STORMTECH FOR COMPACTION REQUIREMENTS.

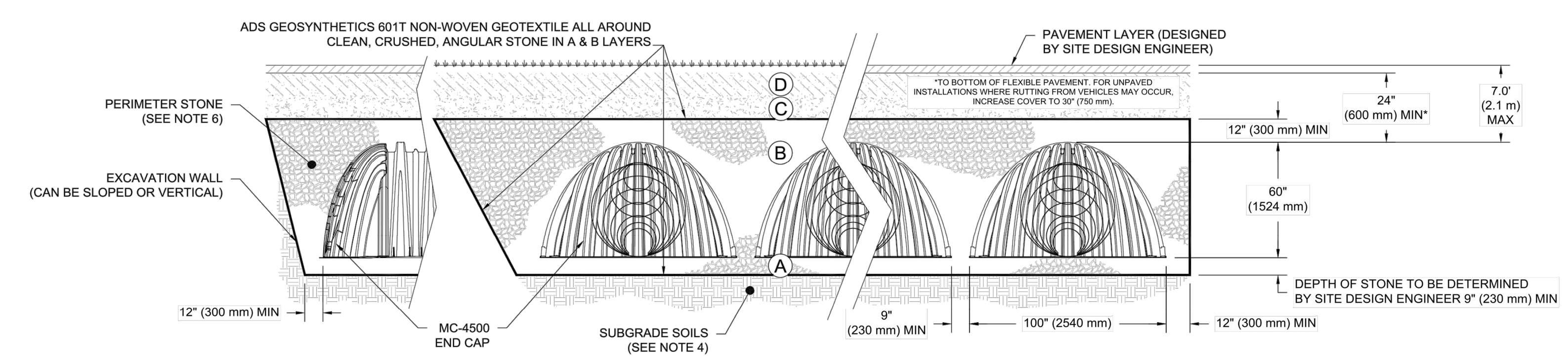

NOTES:

1. MC-4500 CHAMBERS SHALL CONFORM TO THE REQUIREMENTS OF ASTM F2418 "STANDARD SPECIFICATION FOR POLYPROPYLENE (PP) CORRUGATED WALL STORMWATER COLLECTION CHAMBERS".
2. MC-4500 CHAMBERS SHALL BE DESIGNED IN ACCORDANCE WITH ASTM F2787 "STANDARD PRACTICE FOR STRUCTURAL DESIGN OF THERMOPLASTIC CORRUGATED WALL STORMWATER COLLECTION CHAMBERS".
3. "ACCEPTABLE FILL MATERIALS" TABLE ABOVE PROVIDES MATERIAL LOCATIONS, DESCRIPTIONS, GRADATIONS, AND COMPACTION REQUIREMENTS FOR FOUNDATION, EMBEDMENT, AND FILL MATERIALS.
4. THE SITE DESIGN ENGINEER IS RESPONSIBLE FOR ASSESSING THE BEARING RESISTANCE (ALLOWABLE BEARING CAPACITY) OF THE SUBGRADE SOILS AND THE DEPTH OF FOUNDATION STONE WITH CONSIDERATION FOR THE RANGE OF EXPECTED SOIL MOISTURE CONDITIONS.
5. ONCE LAYER 'C' IS PLACED, ANY SOIL/MATERIAL CAN BE PLACED IN LAYER 'D' UP TO THE FINISHED GRADE. MOST PAVEMENT SUBBASE SOILS CAN BE USED TO REPLACE THE MATERIAL REQUIREMENTS OF LAYER 'C' OR 'D' AT THE SITE DESIGN ENGINEER'S DISCRETION.
6. PERIMETER STONE MUST BE EXTENDED HORIZONTALLY TO THE EXCAVATION WALL FOR BOTH VERTICAL AND SLOPED EXCAVATION WALLS.

1 MC-4500 CROSS SECTION DETAIL

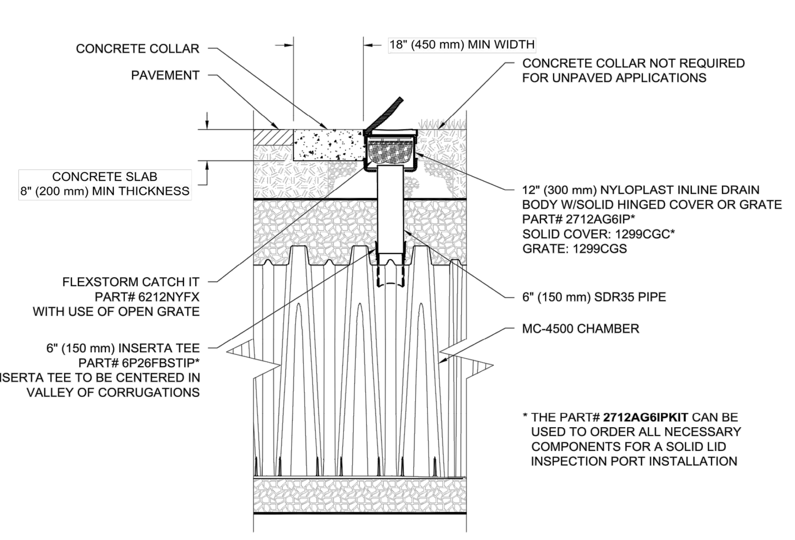

4 MC-4500 6" (150 mm) INSPECTION PORT DETAIL

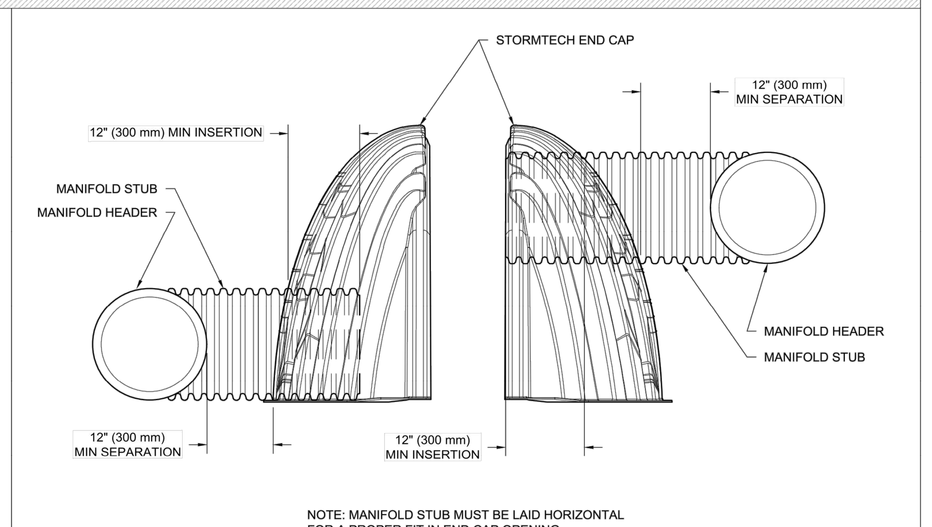

NOTE: MANIFOLD STUB MUST BE LAID HORIZONTAL FOR A PROPER FIT IN END CAP OPENING.

7 MC-SERIES END CAP INSERTION DETAIL

MC-4500
STANDARD DETAILS

DRAWN: JLM
DATE: 08/28/18
REVIEWED: JLM
PROJECT NO:
REV:
NOT TO SCALE

ADVANCED DRAINAGE SYSTEMS, INC. ("ADS") HAS PREPARED THIS DETAIL BASED ON REFERENCED STANDARDS. ADS HAS NOT PERFORMED ANY ENGINEERING OR DESIGN SERVICES FOR THIS PROJECT, NOR HAS ADS INDEPENDENTLY VERIFIED THE INFORMATION SUPPLIED. THE INSTALLATION DETAILS PROVIDED HEREIN ARE GENERAL RECOMMENDATIONS AND ARE NOT SPECIFIC FOR THIS PROJECT, UNLESS THE PLANS ARE SIGNED AND SEALED BY THE SITE DESIGN ENGINEER. THE SITE DESIGN ENGINEER SHALL REVIEW THESE DETAILS PRIOR TO CONSTRUCTION AND SEALING THE DOCUMENT. IT IS THE SITE DESIGN ENGINEER'S RESPONSIBILITY TO ENSURE THAT THE DETAILS PROVIDED HEREIN MEETS OR EXCEEDS THE APPLICABLE NATIONAL, STATE, OR LOCAL REQUIREMENTS AND TO ENSURE THAT THE DETAILS PROVIDED HEREIN ARE ACCEPTABLE FOR THIS PROJECT.

StormTech® Detention • Retention • Water Quality
70 INWOOD ROAD, SUITE 3 | ROCKY HILL | CT | 06067
860-529-8188 | 888-892-2694 | WWW.STORMTECH.COM

ADVANCED DRAINAGE SYSTEMS, INC.
4640 TRUEMAN BLVD
HILLIARD, OH 43026

SHEET
1 OF 1

APPROVED BY THE MANSFIELD PLANNING & ZONING COMMISSION

CHAIRMAN - PLANNING AND ZONING COMMISSION   DATE

ISSUED FOR PERMITTING

NOTES:
1. ADS STORMTECH MC-4500 USED AS BASIS FOR DESIGN. CONTRACTOR SHALL SELECT THIS PRODUCT OR APPROVED EQUAL AND SUBMIT A COMPLETE SHOP DRAWING PACKAGE FOR REVIEW AND APPROVAL BY THE ENGINEER.

ROBERT NEWTON, PE   No. 20662

EAGLEVILLE GREEN

113-121 SOUTH
EAGLEVILLE ROAD
IN
MANSFIELD
CONNECTICUT

DETAILS

NOVEMBER 25, 2019

REVISIONS:

1	01/20/2020	PER TOWN COMMENTS
2	01/31/2020	PER TOWN COMMENTS
3	02/12/2020	PER TEST PIT RESULTS

PREPARED FOR:
MANSFIELD HOUSING DEV. CORP.
309 MAPLE ROAD
STORRS, CT 06268

BSC GROUP
300 Winding Brook Drive
Glastonbury, Connecticut 06033
860 652 8227

© 2019 BSC GROUP, INC.

SCALE: AS SHOWN

FILE: 8374900-DET.DWG
DWG. NO:
JOB. NO: 83749.00
C-6.3

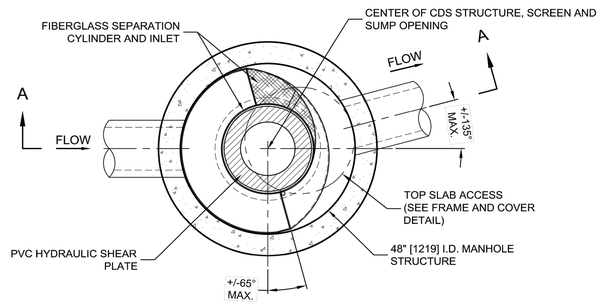

PLAN VIEW B-B
N.T.S.

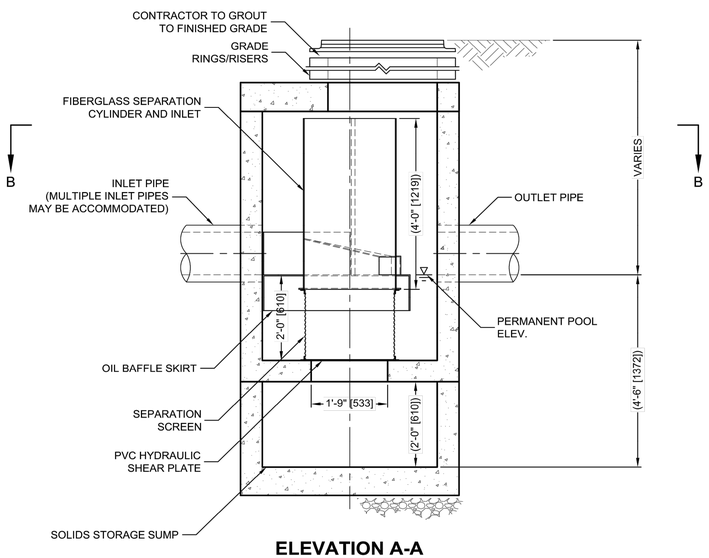

ELEVATION A-A
N.T.S.

THIS PRODUCT MAY BE PROTECTED BY ONE OR MORE OF THE FOLLOWING U.S. PATENTS: 5,788,846; 5,941,720; 6,471,395; 6,881,163; RELATED FOREIGN PATENTS, OR OTHER PATENTS PENDING.

CDS2015-4-C DESIGN NOTES

THE STANDARD CDS2015-4-C CONFIGURATION IS SHOWN. ALTERNATE CONFIGURATIONS ARE AVAILABLE AND ARE LISTED BELOW. SOME CONFIGURATIONS MAY BE COMBINED TO SUIT SITE REQUIREMENTS.

CONFIGURATION DESCRIPTION
GRATED INLET ONLY (NO INLET PIPE)
GRATED INLET WITH INLET PIPE OR PIPES
CURB INLET ONLY (NO INLET PIPE)
CURB INLET WITH INLET PIPE OR PIPES
SEPARATE OIL BAFFLE (SINGLE INLET PIPE REQUIRED FOR THIS CONFIGURATION)
SEDIMENT WEIR FOR NJDEP / NJCAT CONFORMING UNITS

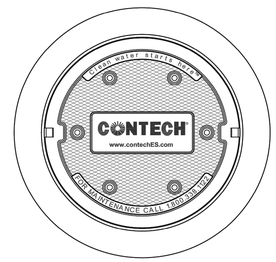

FRAME AND COVER
(DIAMETER VARIES)
N.T.S.

SITE SPECIFIC DATA REQUIREMENTS

STRUCTURE ID			
WATER QUALITY FLOW RATE (CFS OR L/s)			*
PEAK FLOW RATE (CFS OR L/s)			*
RETURN PERIOD OF PEAK FLOW (YRS)			*
SCREEN APERTURE (2400 OR 4700)			*
PIPE DATA:	I.E.	MATERIAL	DIAMETER
INLET PIPE 1	*	*	*
INLET PIPE 2	*	*	*
OUTLET PIPE	*	*	*
RIM ELEVATION			*
ANTI-FLOTATION BALLAST		WIDTH	HEIGHT
		*	*

NOTES/SPECIAL REQUIREMENTS:

* PER ENGINEER OF RECORD

GENERAL NOTES
1. CONTECH TO PROVIDE ALL MATERIALS UNLESS NOTED OTHERWISE.
2. DIMENSIONS MARKED WITH ( ) ARE REFERENCE DIMENSIONS. ACTUAL DIMENSIONS MAY VARY.
3. FOR FABRICATION DRAWINGS WITH DETAILED STRUCTURE DIMENSIONS AND WEIGHTS, PLEASE CONTACT YOUR CONTECH ENGINEERED SOLUTIONS LLC REPRESENTATIVE. www.contechES.com
4. CDS WATER QUALITY STRUCTURE SHALL BE IN ACCORDANCE WITH ALL DESIGN DATA AND INFORMATION CONTAINED IN THIS DRAWING.
5. STRUCTURE SHALL MEET AASHTO HS20 AND CASTINGS SHALL MEET HS20 (AASHTO M 306) LOAD RATING, ASSUMING GROUNDWATER ELEVATION AT, OR BELOW, THE OUTLET PIPE INVERT ELEVATION. ENGINEER OF RECORD TO CONFIRM ACTUAL GROUNDWATER ELEVATION.
6. PVC HYDRAULIC SHEAR PLATE IS PLACED ON SHELF AT BOTTOM OF SCREEN CYLINDER. REMOVE AND REPLACE AS NECESSARY DURING MAINTENANCE CLEANING.

INSTALLATION NOTES
A. ANY SUB-BASE, BACKFILL DEPTH, AND/OR ANTI-FLOTATION PROVISIONS ARE SITE-SPECIFIC DESIGN CONSIDERATIONS AND SHALL BE SPECIFIED BY ENGINEER OF RECORD.
B. CONTRACTOR TO PROVIDE EQUIPMENT WITH SUFFICIENT LIFTING AND REACH CAPACITY TO LIFT AND SET THE CDS MANHOLE STRUCTURE (LIFTING CLUTCHES PROVIDED).
C. CONTRACTOR TO ADD JOINT SEALANT BETWEEN ALL STRUCTURE SECTIONS, AND ASSEMBLE STRUCTURE.
D. CONTRACTOR TO PROVIDE, INSTALL, AND GROUT PIPES. MATCH PIPE INVERTS WITH ELEVATIONS SHOWN.
E. CONTRACTOR TO TAKE APPROPRIATE MEASURES TO ASSURE UNIT IS WATER TIGHT, HOLDING WATER TO FLOWLINE INVERT MINIMUM. IT IS SUGGESTED THAT ALL JOINTS BELOW PIPE INVERTS ARE GROUTED.

CONTECH® ENGINEERED SOLUTIONS LLC
www.contechES.com
9025 Centre Pointe Dr., Suite 400, West Chester, OH 45069
800-338-1122 513-645-7000 513-645-7993 FAX

CDS2015-4-C
INLINE CDS
STANDARD DETAIL

APPROVED BY THE MANSFIELD PLANNING & ZONING COMMISSION

CHAIRMAN - PLANNING AND ZONING COMMISSION DATE

ISSUED FOR PERMITTING

C:\USERS\SCHLACHTERH\DESKTOP\CDS DETAILS 180 MICRON SIZING\CAD\CDS2015-4-C-DTL.DWG 5/19/2014 5:16 PM

EAGLEVILLE GREEN - NOVEMBER 25, 2019

STATE OF CONNECTICUT ROBERT S. NEWTON No. 20662 LICENSED PROFESSIONAL ENGINEER

ROBERT NEWTON, PE No. 20662

EAGLEVILLE GREEN

113-121 SOUTH EAGLEVILLE ROAD
IN
MANSFIELD CONNECTICUT

DETAILS

NOVEMBER 25, 2019

REVISIONS:

1	01/20/2020	PER TOWN COMMENTS
2	01/31/2020	PER TOWN COMMENTS
3	02/12/2020	PER TEST PIT RESULTS

PREPARED FOR:
MANSFIELD HOUSING DEV. CORP.
309 MAPLE ROAD
STORRS, CT 06268

BSC GROUP
300 Winding Brook Drive
Glastonbury, Connecticut 06033
860 652 8227

© 2019 BSC GROUP, INC.

SCALE: AS SHOWN

FILE: 8374900-DET.DWG
DWG. NO: C-6.4
JOB. NO: 83749.00

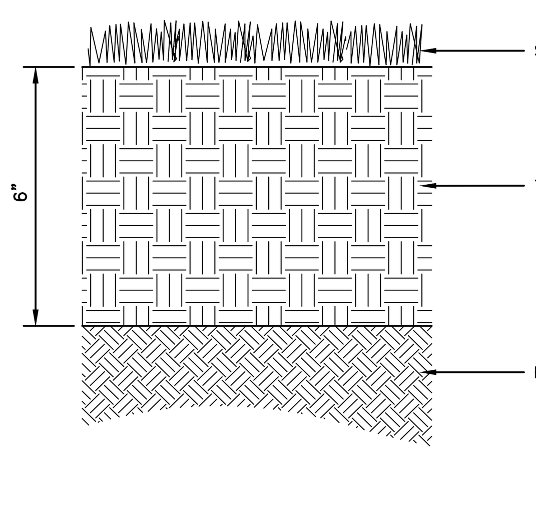

NOTES:
1. CONTRACTOR SHALL PREPARE SOILS IN ALL DISTURBED AREAS AND AREAS USED FOR EQUIPMENT ACCESS.

LAWN
SCALE: NONE

NOTES:
1. LOOSE OR CRACKED ROOT BALLS ARE UNACCEPTABLE.
2. EXCAVATE TO REQUIRED DEPTH AND DO NOT EXCAVATE BELOW ROOT BALL DEPTH.
3. SET SHRUBS PLUMB WITH ROOT FLARE 1" ABOVE FINISHED GRADE, BACKFILL WITH PLANTING MIX.
4. FLOOD WATERING SAUCER TWICE IN FIRST 24 HOURS AFTER PLANTING.
5. RAISE AND REPLANT ANY SHRUBS THAT SETTLE AFTER PLANTING & WATERING.
6. REMOVE 1/3 BURLAP PRIOR TO BACKFILL. SYNTHETIC BURLAP UNACCEPTABLE.E
7. 2" DEPTH MULCH (KEEP MULCH 1" AWAY FROM SHRUB BASE) 3" HIGH EARTH WATERING SAUCER 1'–0" BEYOND ROOT BALL PLANTING MIXTURE.
8. FOR CONTAINERIZED PLANTS: REMOVE CONTAINER PRIOR TO PLANTING, SCARIFY ROOT BALL BELOW EDGE 1/2" DEEP IN FOUR LOCATIONS.

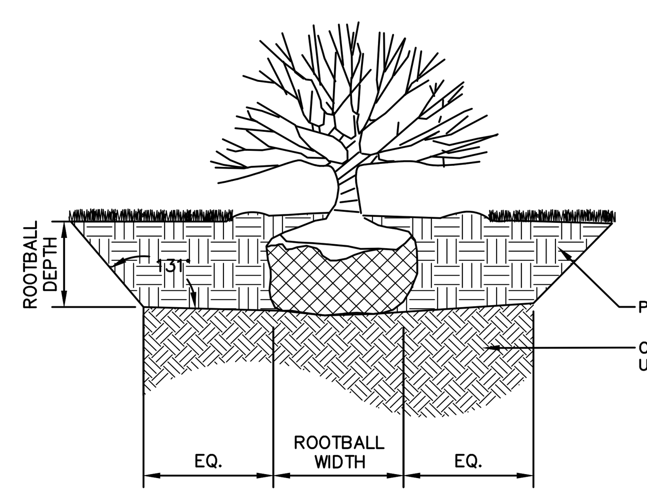

SHRUB PLANTING
SCALE: NONE

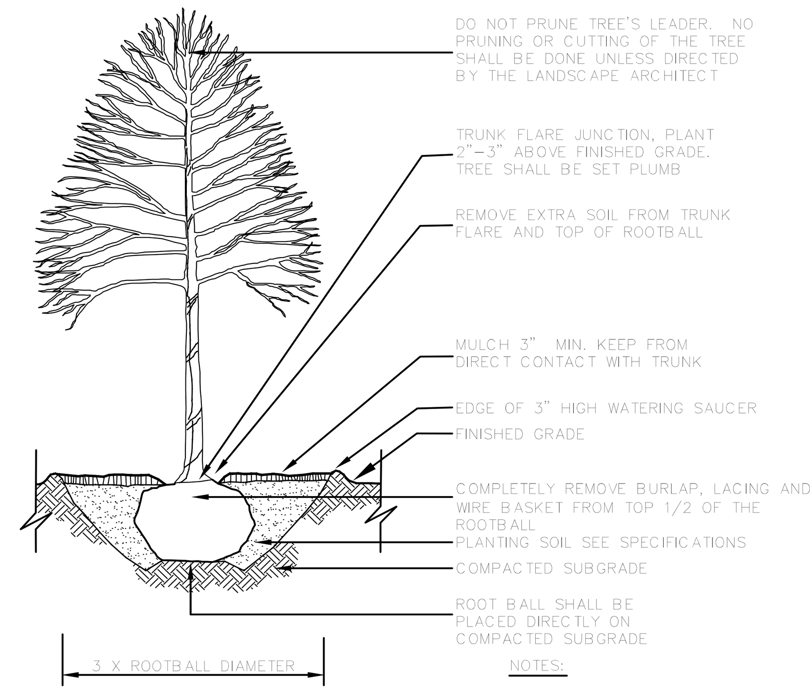

NOTES:
1. SEE SPECIFICATIONS FOR ADDITIONAL REQUIREMENTS.
2. SAUCER SHALL BE FLOODED TWICE DURING THE FIRST 24 HOURS AFTER PLANTING.
3. DO NOT STAKE OR WRAP TREE UNLESS NOTED OTHERWISE.

DECIDUOUS TREE PLANTING
SCALE: NONE
PLNT–107–CT
11/05

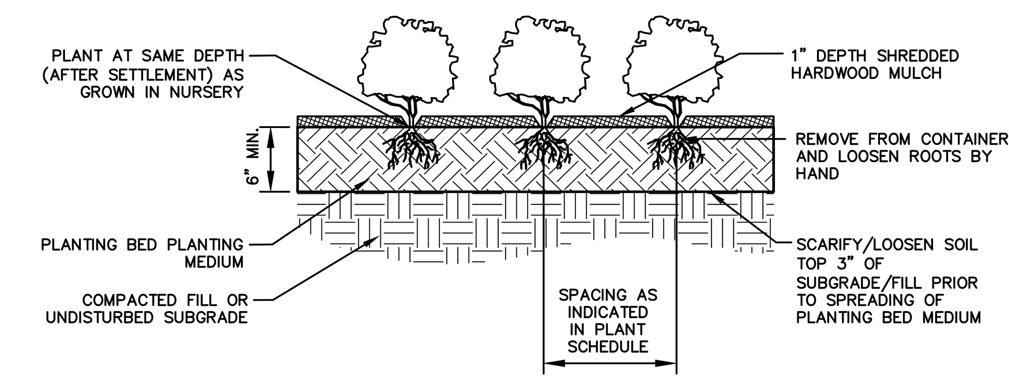

GROUNDCOVER PLANTING TYP.
SCALE: NONE

1710LED VILLA SERIES
LED

*Fixture "A" shown above, additional styles on page 3.

EPA 0.78 (ft²) | WEIGHT 35 LBS | 7 YEAR WARRANTY | LUMEN RANGE 3,070 to 7,365 | LIFE SPAN L70 MINIMUM 100,000 HOURS | UL LISTED | CLICK FOR FAQ's | IP RATING* IP66

*Optical module only

JOB NAME
FIXTURE TYPE
MEMO

BUILD A PART NUMBER
ORDERING EXAMPLE: PT-1710CLED-RA-IH1-R3-IL40TS-MDL07-SV2-MS-R5-PE/BKT

Mounting Config.	Fixture	Roof	Internal Housing	Fitter	LED	CCT	Type	Driver	Internal Lens	Option Mini Shade	Option External Rings	Option Control Recept.	Option Control	Option Fuse	Option Hangstraight	Option House Side Shield	Arm See Arm Spec Sheets	Pole See Pole Spec Sheets	Finish

Mounting Configuration
(Click here to view mounting configuration sheet)
• IW • 2A • 3A90 • 1AM • CAT
• PT • 2A90 • 3APT • 2AM
• IA • 2APT • 4A • 450PB
• IAPT • 3A • 4APT • SH44[1]

W = Wall Mount PT = Post Top A = Arm Mount AM = Arm Mid-Mount PB = Pier Base CAT = Catenary SH = Stem Hung

[1] Include overall drop length in inches after designation for stem application (IE: SH44-48").

Fixture
• 1710ALED • 1710BLED • 1710CLED
• 1710ALEDH • 1710BLEDH • 1710CLEDH
H = Hanging Fixture

Roof
• RA (Deep shade w/ sloped top)
• ~~RB (Deep shade w/ stepped top)~~
• RC[2] (Thin shade)
• RD (Shallow shade w/ flat top)
• RE[3] (No shade w/ flat top)

[2] Not for use with "A" or "B" style fixture
[3] Not for use with "B" style fixture

Internal Housing[7]
• IH1[4,5] (Stacked louvers)
• IH2[5] (Smooth cylinder)
• IH3[5] (Tapered cylinder)
• IH4[5] (4-vaned deco)
• IH5[5] (Ringed cylinder)
• IH6[6] (Low-rise cone)

[4] Not for use with "SV2RB" Internal Lens
[5] For use with "TS" optic only
[6] For use with "TSL" or "TAL" optic only
[7] Internal Housing offered with Silver finish only

Fitter
• R3 • R4 • NA[8]
[8] For use with hanging (H) fixture only

LED
• IL

CCT - Color Temperature (K)
• 27(00) • 30(00) • 40(00) • 50(00)

Distribution Type
• TS (Symmetric, behind internal lens)
• TSL[9] (Symmetric, with large optic)
• TAL[9] (Asymmetric, with large optic)
[9] Not for use with "RC" roof.

Driver
• MDL05 (120V-277V, 500mA)
• MDL07 (120V-277V, 700mA)
• MDL09 (120V-277V, 900mA)
• MDL11 (120V-277V, 1100mA)
• MDH07 (347V-480V, 700mA)
• MDH09 (347V-480V, 900mA)
• MDH11 (347V-480V, 1100mA)

Internal Lens
• SV2RB[10] (Soft Vue Moderate Diffused Ribbed Acrylic Vertical Lens)
• SV2[10] (Soft Vue Moderate Diffused Acrylic Vertical Lens)
• SV4[10] (Soft Vue Maximum Diffused Acrylic Vertical Lens)
• NIL[11] (No Internal Vertical Lens)
[10] For use with "TS" optic only.
[11] For use with "TSL" or "TAL" optic only.

Options (Click here to view accessories sheet)
• MS[12] Mini-Shade
• ERS[12] External Rings
• R[13] 3-Pin control receptacle only
• R5[13] 5-Pin control receptacle only
• R7[13] 7-Pin control receptacle only
• PE[14] Twist-Lock Photocontrol (120V-277V)
• PE3[14] Twist-Lock Photocontrol (347V)
• PE4[14] Twist-Lock Photocontrol (480V)
• SC[14] Shorting Cap
• FHD[15] Double Fuse and Holder
• HSHS[16] Standard Horizontal Hangstraight, Spike Finial
• HSHN[16] Standard Horizontal Hangstraight, No Finial
• HSHB[16] Standard Horizontal Hangstraight, Ball Finial
• EZ[16] Vertical Hangstraight, Large, "EZ" Mount
• HSV[16] Vertical Hangstraight, Standard
• HSS 120° House Side Shield

[12] For use with "C" style fixture only
[13] Cannot be used with SH44, CAT, EZ or HSV mounting style
[14] Requires control receptacle
[15] Ships loose for installation in base
[16] For use with hanging (H) fixture only

Arm (Click here to link to arm specification page)
See Arms & Wall Brackets specification sheets.
• OMS • HMS • VCS
• VFS • VLS

Pole (Click here to link to pole specification page)
See Pole specification sheets.

Finish (Click here to view paint finish sheet)
Standard Urban Finishes
• UGMT Gun Metal Textured
• UGM Gun Metal Matte
• UBT Urban Bronze Textured
• UB Urban Bronze Matte
• ULBT Urban Light Bronze Textured
• ULB Urban Light Bronze Matte
• USLT Urban Silver Textured
• USL Urban Silver Matte
• UWHT Urban White Textured
• UWH Urban White Matte
• UCHS Urban Champagne Satin Smooth
• BKT Black Textured

Custom Urban Finishes[17]
• CM Custom Match
• CHL Custom Highlights (consult factory for more information)
[17] Custom finish requires upcharge, consult factory for more information.

Specifications

Fixture
Fixture shall be cylindrical in form (straight or tapered lens as specified), and feature both a roof casting and internal housing manufactured via permanent mold tooling. The outer lens shall be one-piece, injection molded, non-yellowing acrylic, sealed top and bottom with seamless silicone gaskets to an IP66 rating. Set screws and related hardware shall be finish painted to match the fixture housing. The luminaire shall be UL listed in the U.S. and Canada.

Optional Mini-Shade / External Rings
Offered on fixture style "C" only.
(Mini-Shade) A small cast aluminum louvered shade measuring 17-1/2" OD x 1-1/2" tall,

See next page

SternbergLighting
ESTABLISHED 1923 / EMPLOYEE OWNED

800-621-3376
555 Lawrence Ave., Roselle, IL 60172
info@sternberglighting.com
www.sternberglighting.com

7/19 STERNBERG LIGHTING. ALL RIGHTS RESERVED. PRINTED IN THE USA.

1710LED VILLA SERIES
LED

installed above the shade on roof style RC. Installed under shade on styles RA, RB, RD & RE
(External Rings) 2 flat cast aluminum rings measuring 13" OD, installed above the shade on roof style RC. Installed under shade on styles RA, RB, RD & RE

Fitter - Standard
Fixture shall house the driver and be provided with a heavy wall die cast aluminum fitter designed to slip-fit 3"OD (R3) or 4"OD (R4) x 3" tall tenons/poles. The fitter shall have three (3) stainless steel allen head screws to secure the connection between the fitter and tenon/pole. All external hardware shall be finish painted to match the rest of the fixture housing.

LEDs
The luminaire shall use high output, high brightness LED's, consisting of a two piece assembly complete with Chip on Board (COB) LED component and COB holder frame. The LED's and printed circuit boards shall be 100% recyclable; they shall also be protected from moisture and corrosion by a conformal coating of 1 to 3 mils. They shall not contain lead, mercury or any other hazardous substances and shall be RoHS compliant. The LED life rating data shall be determined in accordance with IESNA LM-80. The High Performance white LED's will have a life expectancy of approximately 100,000 hours with not less than 70% of original brightness (lumen maintenance), rated at 25°C. The High Brightness, High Output LED's shall be 4000K (2700K, 3000K or 5000K option) color temperature with a minimum of 70 CRI. Consult factory for custom color CCT. The luminaire shall have a minimum ______ (see table) delivered initial lumen rating when operated at steady state with an average ambient temperature of 25°C (77°F).

Optics
(TS Optic) The luminaire shall be provided with an individual, molded silicone refractor type optic applied to the COB (Chip On Board) LED assembly. An additional vertical diffused acrylic lens installed inside the unit allows for a high level of visual comfort. All testing shall be done in accordance with IESNA LM-79.
(TSL & TAL Optic) The luminaire shall be provided with an individual, large injection molded acrylic refractor type optic applied to the COB (Chip On Board) LED assembly. The optic visually spreads out size of the light source while creating a Symmetric (TSL) or asymmetric (TAL) light pattern. All testing shall be done in accordance with IESNA LM-79.

Electronic Drivers
The LED driver shall be U.L. Recognized. It shall be securely mounted inside the fixture, for optimized performance and longevity. It shall be supplied with a quick-disconnect electrical connector on the power supply, providing easy power connections and fixture installation. It shall have overload, overheat and short circuit protection, and have a DC voltage output, constant current design, 50/60HZ. It shall be supplied with line-ground, line-neutral and neutral-ground electrical surge protection in accordance with IEEE/ANSI C62.41.2 guidelines. It shall be a high efficiency driver with a THD less than 20% and a high power factor greater than .9. It shall be dimming capable using a 0-10v signal, consult factory for more information.

Photocontrols
Twist-Lock Style: The photocontrol shall be mounted externally on the fixture and prewired to driver. The twist lock type photocontrol is instant on with a 3-6 second turn off, and shall turn on at 1.5 footcandles with a turn-off at 2-3 footcandles. Photocontrol is 120-277 volt and warranted for 6 years.

Wireless Controls
A 5-pin (R5) or 7-pin (R7) NEMA receptacle can be included on the unit for wireless control systems.

Warranty
Seven-year limited warranty. See product and finish warranty guide for details.

Finish
Refer to website for details.

Performance (based on "C" style fixture with "RD" roof)

MODEL #	TS DELIVERED LUMENS	EFFICACY (LPW)	TSL DELIVERED LUMENS	EFFICACY (LPW)	TAL DELIVERED LUMENS	EFFICACY (LPW)	WATTAGE
1L40T_-MDL11	7325	114.5	7365	115.1	7270	113.6	64
1L30T_-MDL11	7140	111.6	7175	112.1	7085	110.7	64
1L27T_-MDL11	6485	101.3	6520	101.9	6435	100.5	64
1L40T_-MDL09	6060	116.5	6130	117.9	6045	116.3	52
1L30T_-MDL09	5905	113.6	5975	114.9	5890	113.3	52
1L27T_-MDL09	5365	103.2	5425	104.3	5350	102.9	52
1L40T_-MDL07	4790	116.8	4845	118.2	4770	116.3	41
1L30T_-MDL07	4670	113.9	4720	115.1	4650	113.4	41
1L27T_-MDL07	4240	103.4	4290	104.6	4225	103.0	41
1L40T_-MDL05	3500	116.7	3540	118.0	3470	115.7	30
1L30T_-MDL05	3410	113.7	3450	115.0	3380	112.7	30
1L27T_-MDL05	3100	103.3	3135	104.5	3070	102.3	30

SternbergLighting
ESTABLISHED 1923 / EMPLOYEE OWNED

800-621-3376
555 Lawrence Ave., Roselle, IL 60172
info@sternberglighting.com
www.sternberglighting.com

7/19 STERNBERG LIGHTING. ALL RIGHTS RESERVED. PRINTED IN THE USA.

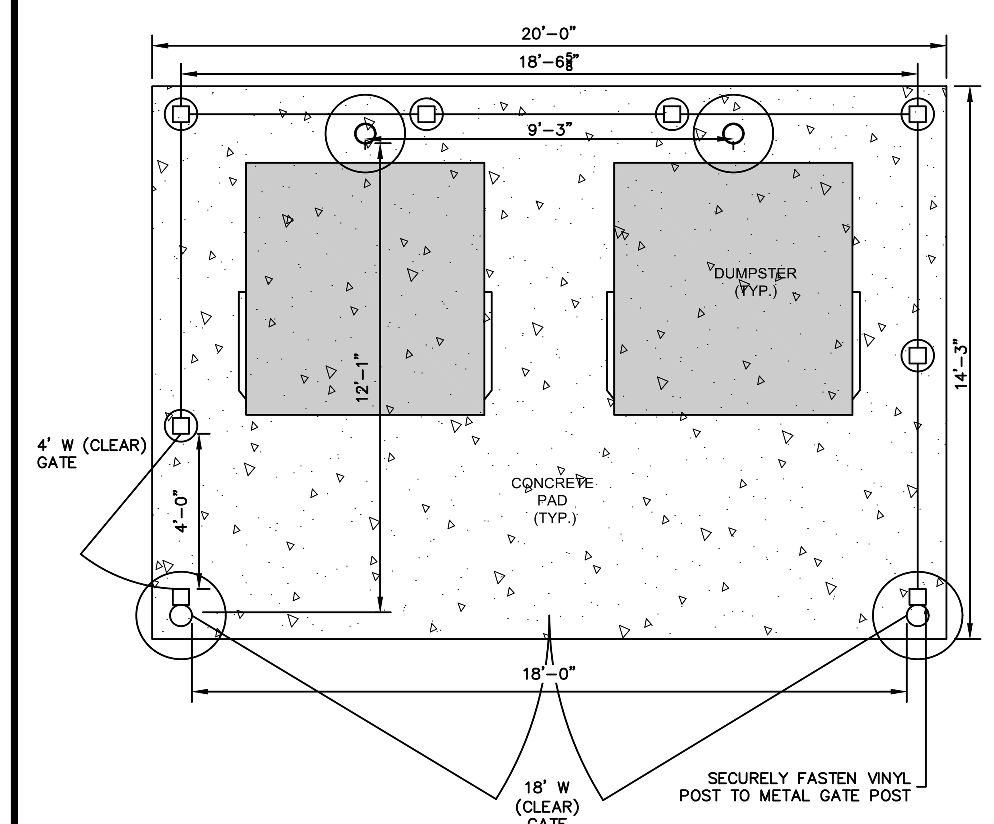

DUMPSTER PAD LAYOUT

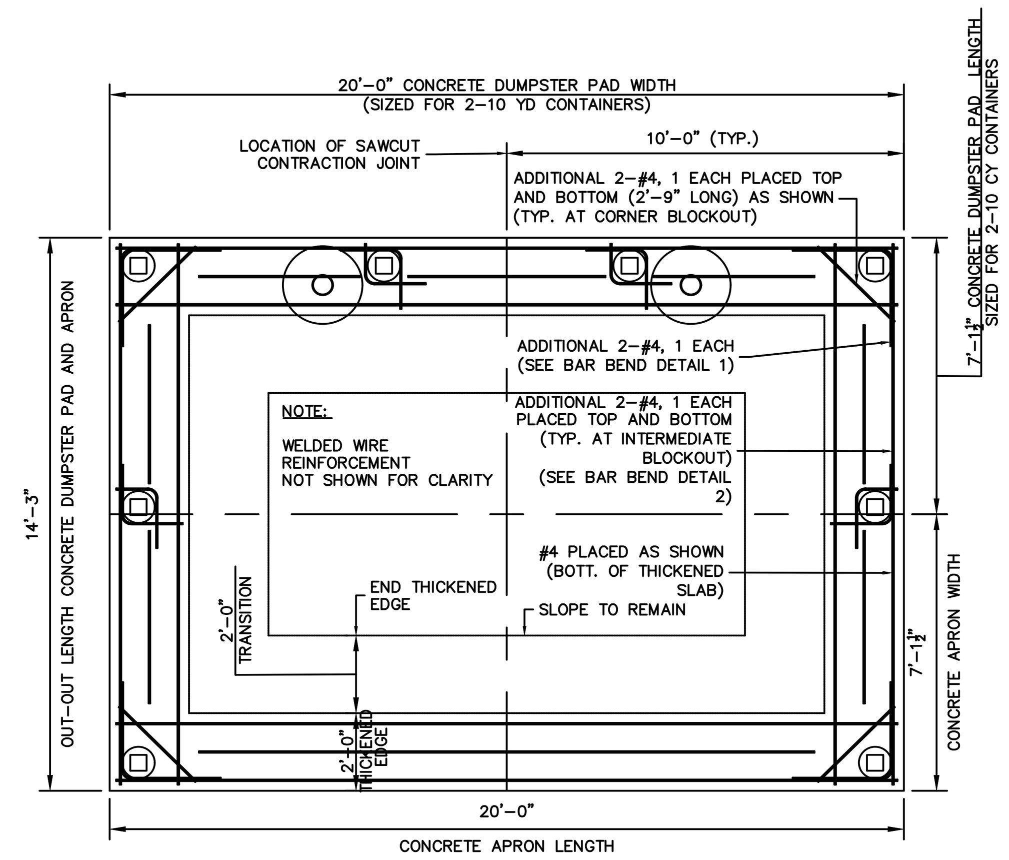

CONCRETE SLAB LAYOUT

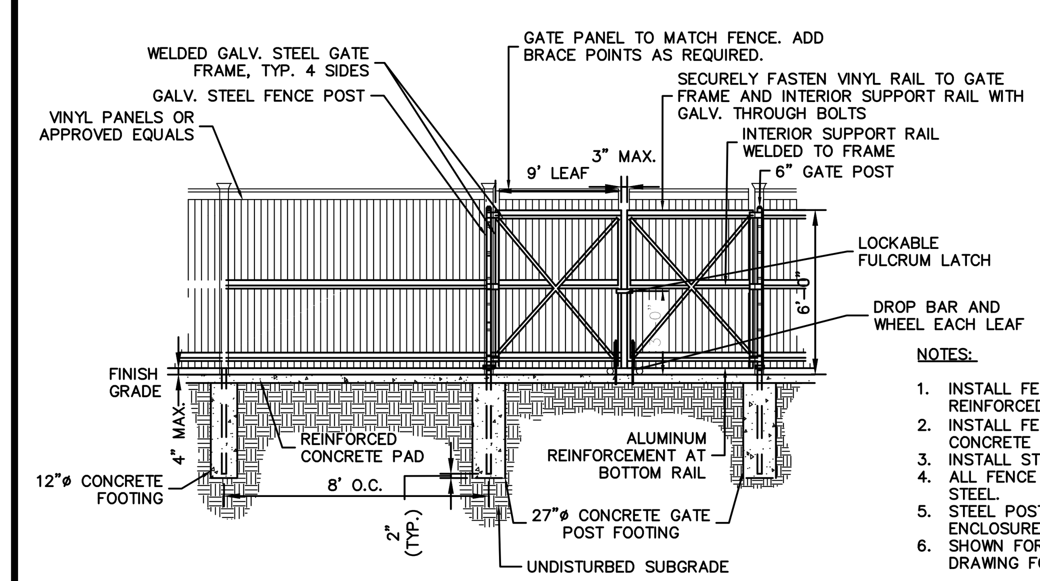

DUMPSTER PAD ENCLOSURE

FENCE FRAMEWORK SCHEDULE

FENCE HEIGHT	UP TO 4'	5' TO 6'
FENCE POST	2.375" O.D.	2.875" O.D.
TOP AND BOTTOM RAIL	1.6" O.D.	2.375"
MIDDLE RAIL	NONE	2.375"
FOOTING	12" DIA.	12" DIA.

GATE FRAMEWORK SCHEDULE

GATE LEAF WIDTH	6'W OR LESS	>6'W – <12'W
GATE POST	6" O.D.	6" O.D.
GATE FRAME (4 SIDES)	2"	2.375"
INTERIOR SUPPORT	NONE	2.375"
HEAVY DUTY HINGE	3 PER LEAF	3 PER LEAF
FOOTING	16" DIA.	24" DIA.

NOTES:
1. INSTALL FENCE FOOTINGS PRIOR TO INSTALLATION OF REINFORCED CONCRETE PAD.
2. INSTALL FENCE POSTS 6" FROM THE EDGE OF THE CONCRETE PAD.
3. INSTALL STOCKADE ON OUTSIDE OF POSTS.
4. ALL FENCE POSTS SHALL BE SCHEDULE 80 GALV. STEEL.
5. STEEL POSTS SHALL NOT BE VISIBLE FROM OUTSIDE OF ENCLOSURE.
6. SHOWN FOR DIAGRAMMATIC PURPOSES. PROVIDE SHOP DRAWING FOR APPROVAL.

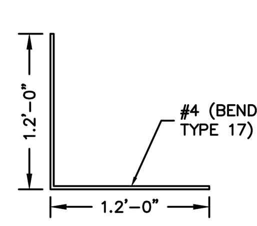

BAR BEND DETAIL 1

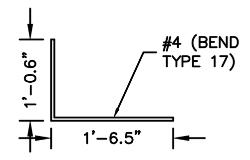

BAR BEND DETAIL 2

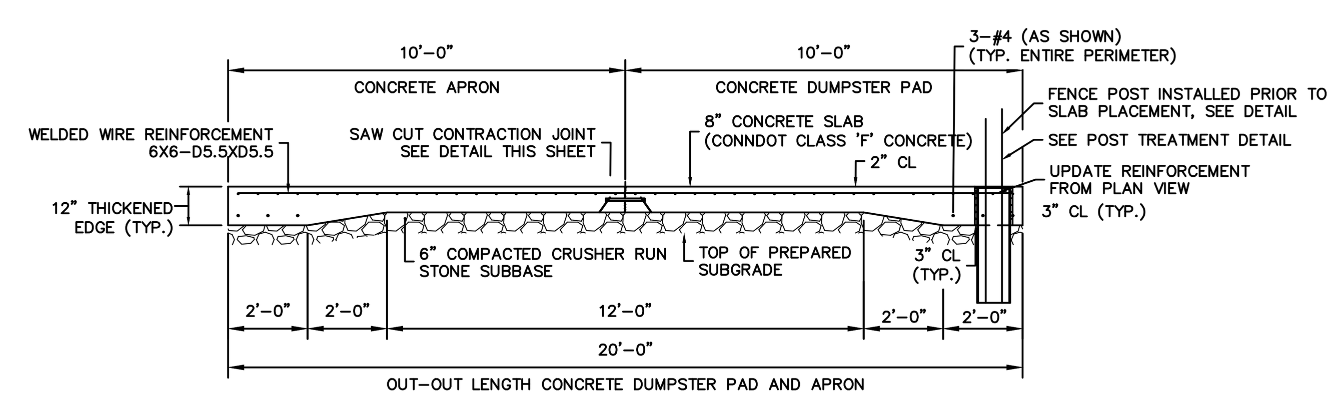

CONCRETE SLAB SECTION

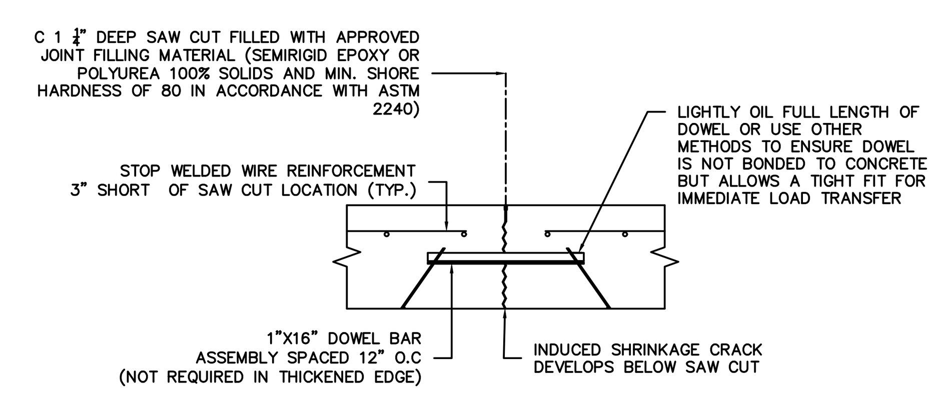

SAWCUT CONTRACTION JOINT DETAIL

DUMPSTER ENCLOSURE
SCALE: NONE

APPROVED BY THE MANSFIELD PLANNING & ZONING COMMISSION

CHAIRMAN - PLANNING AND ZONING COMMISSION | *DATE*

ISSUED FOR PERMITTING

EAGLEVILLE GREEN - NOVEMBER 25, 2019

RACHEL N. SALCH, PLA No. 1438

EAGLEVILLE GREEN

113-121 SOUTH EAGLEVILLE ROAD
IN
MANSFIELD CONNECTICUT

DETAILS

NOVEMBER 25, 2019

REVISIONS:

1	01/20/2020	PER TOWN COMMENTS
2	01/31/2020	PER TOWN COMMENTS
3	02/12/2020	PER TEST PIT RESULTS

PREPARED FOR:
MANSFIELD HOUSING DEV. CORP.
309 MAPLE ROAD
STORRS, CT 06268

BSC GROUP
300 Winding Brook Drive
Glastonbury, Connecticut 06033
860 652 8227

© 2019 BSC GROUP, INC.

SCALE: AS SHOWN

FILE: 8374900–DET.DWG
DWG. NO: C-6.5
JOB. NO: 83749.00

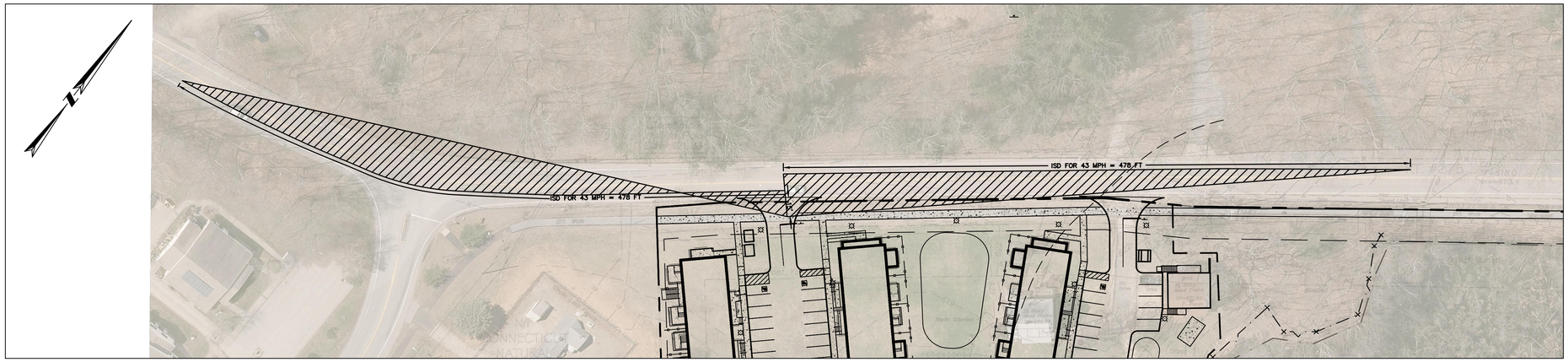

WEST EXIT - INTERSECTION SIGHT DISTANCE
SCALE: 1" = 40'

EAST EXIT - INTERSECTION SIGHT DISTANCE
SCALE: 1" = 40'

NOTES:

1. INTERSECTION SIGHT DISTANCE IDENTIFIED ON THIS PLAN IS DESIGNED IN ACCORDANCE WITH THE CONNECTICUT HIGHWAY DESIGN MANUAL, CHAPTER 11 "INTERSECTIONS AT GRADE," SECTION 2.03.01 – FIGURE 11–2C "INTERSECTION SIGHT DISTANCES (TWO–LANE HIGHWAY OR STREET)."
2. THE 85TH PERCENTILE SPEED ON SOUTH EAGLEVILLE ROAD (STATE ROUTE NO. 275) AT THE LOCATION OF THE SITE IS 43 MPH.
3. THE INTERSECTION SIGHT DISTANCE FOR A PASSENGER VEHICLE MAKING A LEFT TURN ONTO THE 43 MPH ROAD IS 478 FEET ALONG THE VEHICLE PATH.
4. THE INTERSECTION SIGHT DISTANCE LINE OF SIGHT IS MEASURED 15 FEET BACK OF THE GUTTER LINE AT THE CENTER OF THE EXIT LANE.
5. THE APPROACH GRADE AT BOTH INTERSECTIONS IS LESS THAN +3.0% SLOPE.

INTERSECTION DISTANCES (MINIMUM REQUIRED = 478 FEET):

WEST EXIT:
LEFT–TURN = GREATER THAN 1000 FEET
RIGHT–TURN = 478 FEET

EAST EXIT:
LEFT–TURN = GREATER THAN 1000 FEET
RIGHT–TURN = GREATER THAN 600 FEET

LEGEND

- PROPERTY LINE
- LIMIT OF WORK
- WETLAND BOUNDARY
- PROPOSED CURBING
- INTERSECTION SIGHT DISTANCE TRIANGLE

APPROVED BY THE MANSFIELD PLANNING & ZONING COMMISSION

CHAIRMAN - PLANNING AND ZONING COMMISSION _____ DATE _____

ISSUED FOR PERMITTING

EAGLEVILLE GREEN - NOVEMBER 25, 2019

STATE OF CONNECTICUT · ROBERT S. NEWTON · No. 20662 · LICENSED PROFESSIONAL ENGINEER

ROBERT NEWTON, PE No. 20662

EAGLEVILLE GREEN

113-121 SOUTH
EAGLEVILLE ROAD
IN
MANSFIELD
CONNECTICUT

INTERSECTION SIGHT
DISTANCE PLAN

NOVEMBER 25, 2019

REVISIONS:

1	01/20/2020	PER TOWN COMMENTS
2	01/31/2020	PER TOWN COMMENTS
3	02/12/2020	PER TEST PIT RESULTS

PREPARED FOR:
MANSFIELD HOUSING DEV. CORP.
309 MAPLE ROAD
STORRS, CT 06268

BSC GROUP
300 Winding Brook Drive
Glastonbury, Connecticut 06033
860 652 8227

© 2019 BSC GROUP, INC.

SCALE: 1" = 40'
0 20 40 80 FEET

FILE: 8374900–ISD.DWG
DWG. NO: C-7.0
JOB. NO: 83749.00

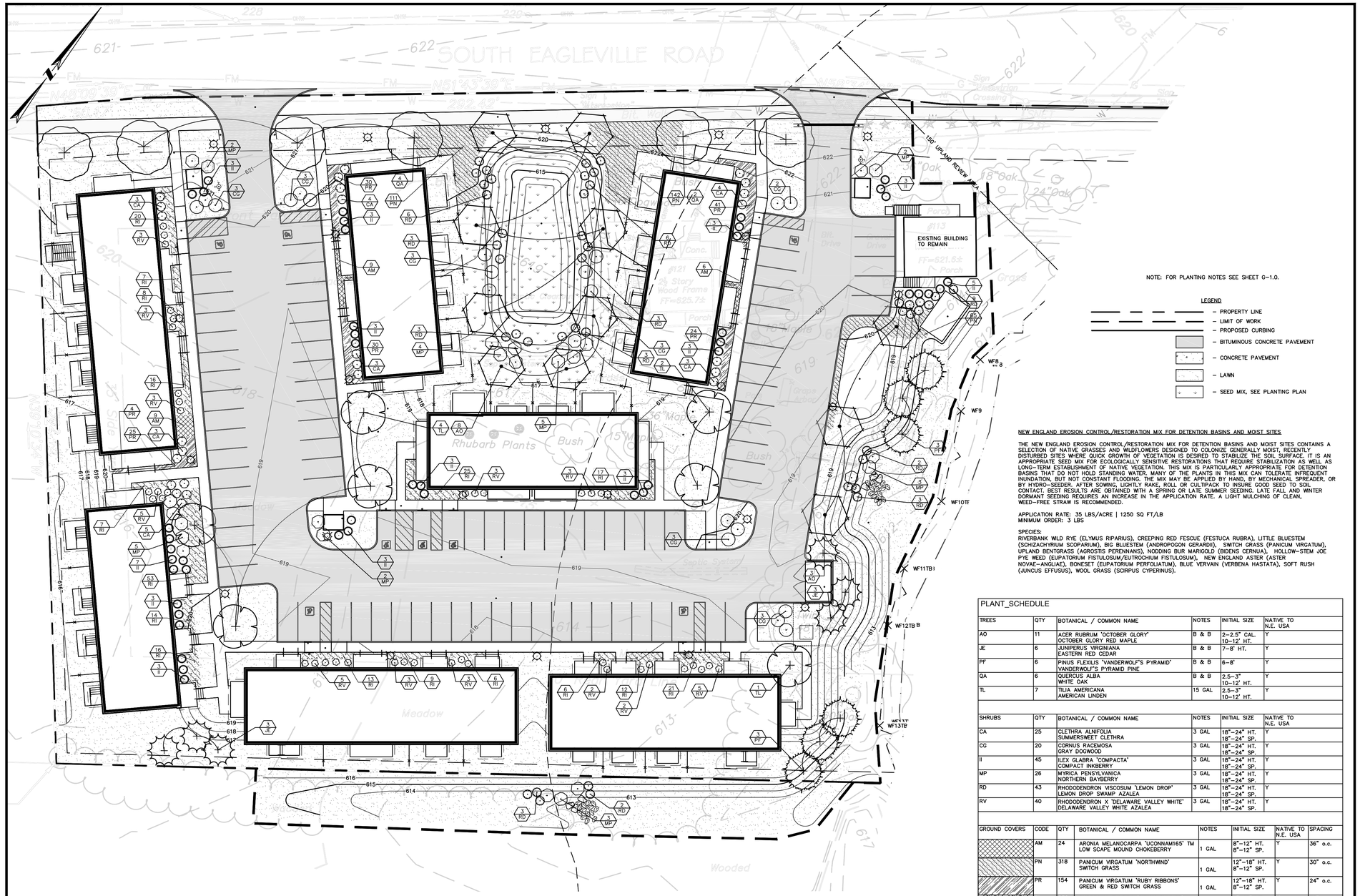

NOTE: FOR PLANTING NOTES SEE SHEET G-1.0.

LEGEND

- PROPERTY LINE
- LIMIT OF WORK
- PROPOSED CURBING
- BITUMINOUS CONCRETE PAVEMENT
- CONCRETE PAVEMENT
- LAWN
- SEED MIX, SEE PLANTING PLAN

NEW ENGLAND EROSION CONTROL/RESTORATION MIX FOR DETENTION BASINS AND MOIST SITES

THE NEW ENGLAND EROSION CONTROL/RESTORATION MIX FOR DETENTION BASINS AND MOIST SITES CONTAINS A SELECTION OF NATIVE GRASSES AND WILDFLOWERS DESIGNED TO COLONIZE GENERALLY MOIST, RECENTLY DISTURBED SITES WHERE QUICK GROWTH OF VEGETATION IS DESIRED TO STABILIZE THE SOIL SURFACE. IT IS AN APPROPRIATE SEED MIX FOR ECOLOGICALLY SENSITIVE RESTORATIONS THAT REQUIRE STABILIZATION AS WELL AS LONG-TERM ESTABLISHMENT OF NATIVE VEGETATION. THIS MIX IS PARTICULARLY APPROPRIATE FOR DETENTION BASINS THAT DO NOT HOLD STANDING WATER. MANY OF THE PLANTS IN THIS MIX CAN TOLERATE INFREQUENT INUNDATION, BUT NOT CONSTANT FLOODING. THE MIX MAY BE APPLIED BY HAND, BY MECHANICAL SPREADER, OR BY HYDRO-SEEDER. AFTER SOWING, LIGHTLY RAKE, ROLL OR CULTIPACK TO INSURE GOOD SEED TO SOIL CONTACT. BEST RESULTS ARE OBTAINED WITH A SPRING OR LATE SUMMER SEEDING. LATE FALL AND WINTER DORMANT SEEDING REQUIRES AN INCREASE IN THE APPLICATION RATE. A LIGHT MULCHING OF CLEAN, WEED-FREE STRAW IS RECOMMENDED.

APPLICATION RATE: 35 LBS/ACRE | 1250 SQ FT/LB
MINIMUM ORDER: 3 LBS

SPECIES:
RIVERBANK WILD RYE (ELYMUS RIPARIUS), CREEPING RED FESCUE (FESTUCA RUBRA), LITTLE BLUESTEM (SCHIZACHYRIUM SCOPARIUM), BIG BLUESTEM (ANDROPOGON GERARDII), SWITCH GRASS (PANICUM VIRGATUM), UPLAND BENTGRASS (AGROSTIS PERENNANS), NODDING BUR MARIGOLD (BIDENS CERNUA), HOLLOW-STEM JOE PYE WEED (EUPATORIUM FISTULOSUM/EUTROCHIUM FISTULOSUM), NEW ENGLAND ASTER (ASTER NOVAE-ANGLIAE), BONESET (EUPATORIUM PERFOLIATUM), BLUE VERVAIN (VERBENA HASTATA), SOFT RUSH (JUNCUS EFFUSUS), WOOL GRASS (SCIRPUS CYPERINUS).

PLANT_SCHEDULE

TREES	QTY	BOTANICAL / COMMON NAME	NOTES	INITIAL SIZE	NATIVE TO N.E. USA
AO	11	ACER RUBRUM 'OCTOBER GLORY' OCTOBER GLORY RED MAPLE	B & B	2-2.5" CAL. 10-12' HT.	Y
JE	6	JUNIPERUS VIRGINIANA EASTERN RED CEDAR	B & B	7-8' HT.	Y
PF	6	PINUS FLEXILIS 'VANDERWOLF'S PYRAMID' VANDERWOLF'S PYRAMID PINE	B & B	6-8'	Y
QA	6	QUERCUS ALBA WHITE OAK	B & B	2.5-3" 10-12' HT.	Y
TL	7	TILIA AMERICANA AMERICAN LINDEN	15 GAL	2.5-3" 10-12' HT.	Y

SHRUBS	QTY	BOTANICAL / COMMON NAME	NOTES	INITIAL SIZE	NATIVE TO N.E. USA
CA	25	CLETHRA ALNIFOLIA SUMMERSWEET CLETHRA	3 GAL	18"-24" HT. 18"-24" SP.	Y
CG	20	CORNUS RACEMOSA GRAY DOGWOOD	3 GAL	18"-24" HT. 18"-24" SP.	Y
II	45	ILEX GLABRA 'COMPACTA' COMPACT INKBERRY	3 GAL	18"-24" HT. 18"-24" SP.	Y
MP	26	MYRICA PENSYLVANICA NORTHERN BAYBERRY	3 GAL	18"-24" HT. 18"-24" SP.	Y
RD	43	RHODODENDRON VISCOSUM 'LEMON DROP' LEMON DROP SWAMP AZALEA	3 GAL	18"-24" HT. 18"-24" SP.	Y
RV	40	RHODODENDRON X 'DELAWARE VALLEY WHITE' DELAWARE VALLEY WHITE AZALEA	3 GAL	18"-24" HT. 18"-24" SP.	Y

GROUND COVERS	CODE	QTY	BOTANICAL / COMMON NAME	NOTES	INITIAL SIZE	NATIVE TO N.E. USA	SPACING
	AM	24	ARONIA MELANOCARPA 'UCONNAM165' TM LOW SCAPE MOUND CHOKEBERRY	1 GAL	8"-12" HT. 8"-12" SP.	Y	36" o.c.
	PN	318	PANICUM VIRGATUM 'NORTHWIND' SWITCH GRASS	1 GAL	12"-18" HT. 8"-12" SP.	Y	30" o.c.
	PR	154	PANICUM VIRGATUM 'RUBY RIBBONS' GREEN & RED SWITCH GRASS	1 GAL	12"-18" HT. 8"-12" SP.	Y	24" o.c.
	RI	250	RUDBECKIA FULGIDA 'INDIAN SUMMER' CONEFLOWER	1 GAL	8"-12" HT. 8"-12" SP.	Y	30" o.c.

APPROVED BY THE MANSFIELD PLANNING & ZONING COMMISSION

CHAIRMAN - PLANNING AND ZONING COMMISSION _____ DATE _____

ISSUED FOR PERMITTING

EAGLEVILLE GREEN - NOVEMBER 25, 2019

STATE OF CONNECTICUT · RACHEL NICOLE SALCH · LICENSED LANDSCAPE ARCHITECT · No. 1438

RACHEL N. SALCH, PLA No. 1438

EAGLEVILLE GREEN

113-121 SOUTH EAGLEVILLE ROAD
IN
MANSFIELD
CONNECTICUT

PLANTING PLAN

NOVEMBER 25, 2019

REVISIONS:

1	01/20/2020	PER TOWN COMMENTS
2	01/31/2020	PER TOWN COMMENTS
3	02/12/2020	PER TEST PIT RESULTS

PREPARED FOR:
MANSFIELD HOUSING DEV. CORP.
309 MAPLE ROAD
STORRS, CT 06268

BSC GROUP
300 Winding Brook Drive
Glastonbury, Connecticut 06033
860 652 8227

© 2019 BSC GROUP, INC.

SCALE: 1" = 20'
0 10 20 40 FEET

FILE: 8374900-PLANT.DWG
DWG. NO: L-1.0
JOB. NO: 83749.00

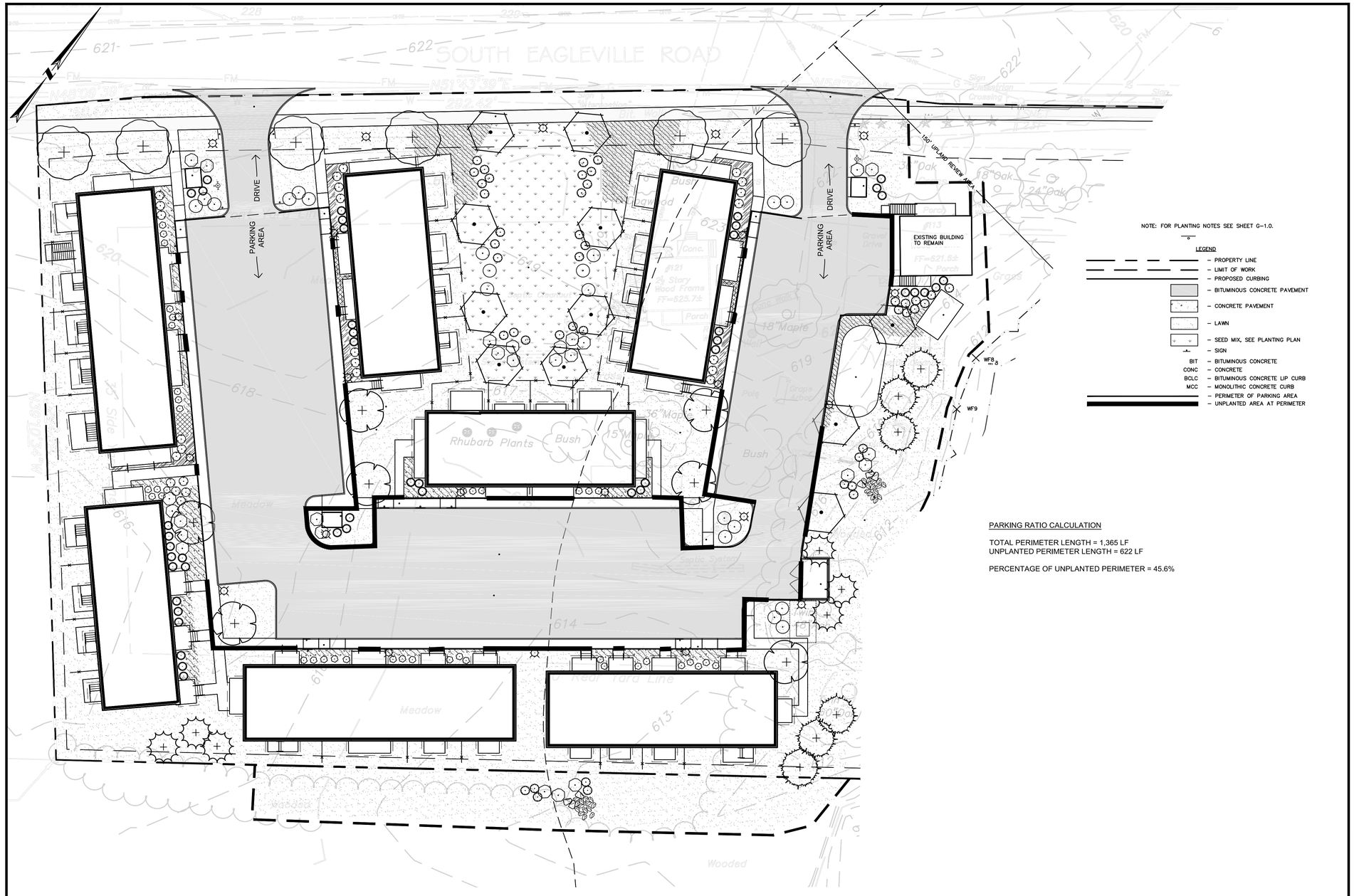

NOTE: FOR PLANTING NOTES SEE SHEET G-1.0.

LEGEND

- PROPERTY LINE
- LIMIT OF WORK
- PROPOSED CURBING
- BITUMINOUS CONCRETE PAVEMENT
- CONCRETE PAVEMENT
- LAWN
- SEED MIX, SEE PLANTING PLAN
- SIGN

BIT – BITUMINOUS CONCRETE
CONC – CONCRETE
BCLC – BITUMINOUS CONCRETE LIP CURB
MCC – MONOLITHIC CONCRETE CURB

- PERIMETER OF PARKING AREA
- UNPLANTED AREA AT PERIMETER

PARKING RATIO CALCULATION

TOTAL PERIMETER LENGTH = 1,365 LF
UNPLANTED PERIMETER LENGTH = 622 LF

PERCENTAGE OF UNPLANTED PERIMETER = 45.6%

APPROVED BY THE MANSFIELD PLANNING & ZONING COMMISSION

CHAIRMAN - PLANNING AND ZONING COMMISSION DATE

ISSUED FOR PERMITTING

EAGLEVILLE GREEN - NOVEMBER 25, 2019

STATE OF CONNECTICUT
RACHEL NICOLE SALCH
LICENSED LANDSCAPE ARCHITECT
No. 1438

RACHEL N. SALCH, PLA No. 1438

EAGLEVILLE GREEN

113-121 SOUTH EAGLEVILLE ROAD
IN
MANSFIELD
CONNECTICUT

PLANTING RATIO

NOVEMBER 25, 2019

REVISIONS:

1	01/20/2020	PER TOWN COMMENTS
2	01/31/2020	PER TOWN COMMENTS
3	02/12/2020	PER TEST PIT RESULTS

PREPARED FOR:
MANSFIELD HOUSING DEV. CORP.
309 MAPLE ROAD
STORRS, CT 06268

BSC GROUP
300 Winding Brook Drive
Glastonbury, Connecticut 06033
860 652 8227

© 2019 BSC GROUP, INC.

SCALE: 1" = 20'
0 10 20 40 FEET

FILE: 8374900-PLANT.DWG
DWG. NO:
JOB. NO: 83749.00

L-1.1

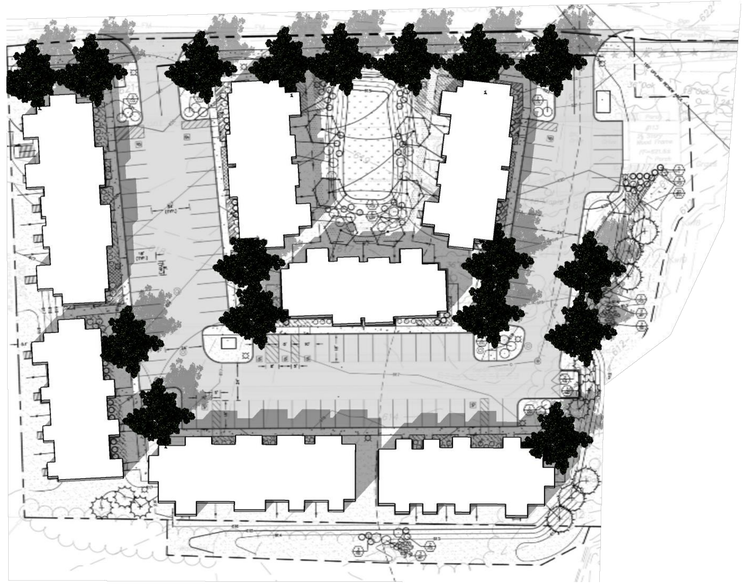

SHADE STUDY - SPRING

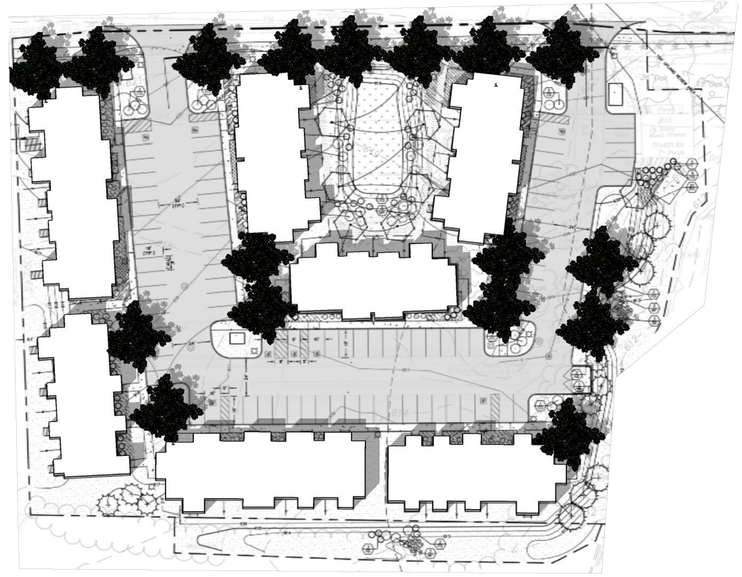

SHADE STUDY - SUMMER

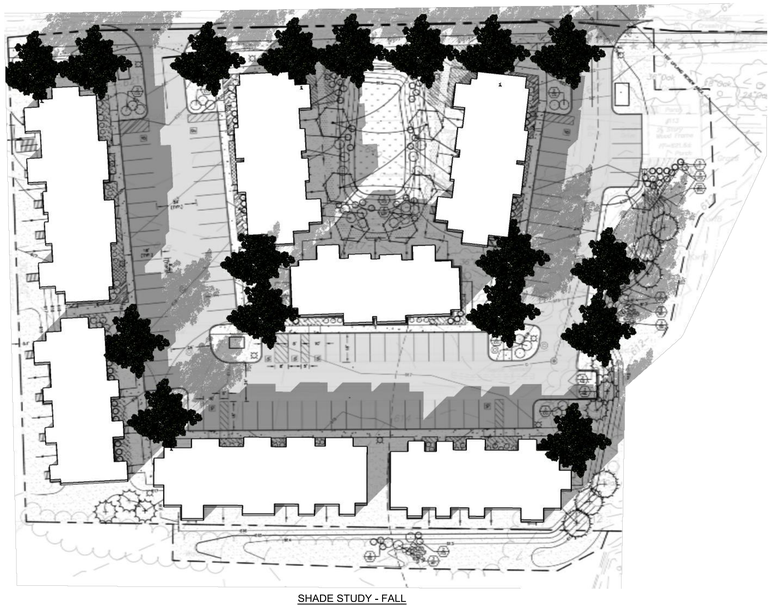

SHADE STUDY - FALL

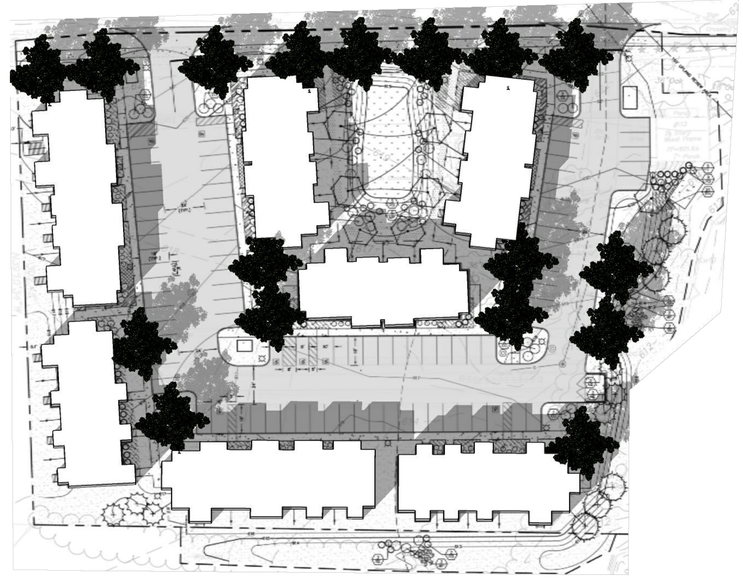

SHADE STUDY - WINTER

APPROVED BY THE MANSFIELD PLANNING & ZONING COMMISSION

CHAIRMAN - PLANNING AND ZONING COMMISSION _____ DATE _____

ISSUED FOR PERMITTING

EAGLEVILLE GREEN - NOVEMBER 25, 2019

EAGLEVILLE GREEN

113-121 SOUTH
EAGLEVILLE ROAD
IN
MANSFIELD
CONNECTICUT

SHADE STUDY

NOVEMBER 25, 2019

REVISIONS:

1	01/20/2020	PER TOWN COMMENTS
2	01/31/2020	PER TOWN COMMENTS
3	02/12/2020	PER TEST PIT RESULTS

PREPARED FOR:
MANSFIELD HOUSING DEV. CORP.
309 MAPLE ROAD
STORRS, CT 06268

BSC GROUP
300 Winding Brook Drive
Glastonbury, Connecticut 06033
860 652 8227

© 2019 BSC GROUP, INC.

SCALE: NONE

FILE: 8374900-PLANT.DWG
DWG. NO: L-1.2
JOB. NO: 83749.00