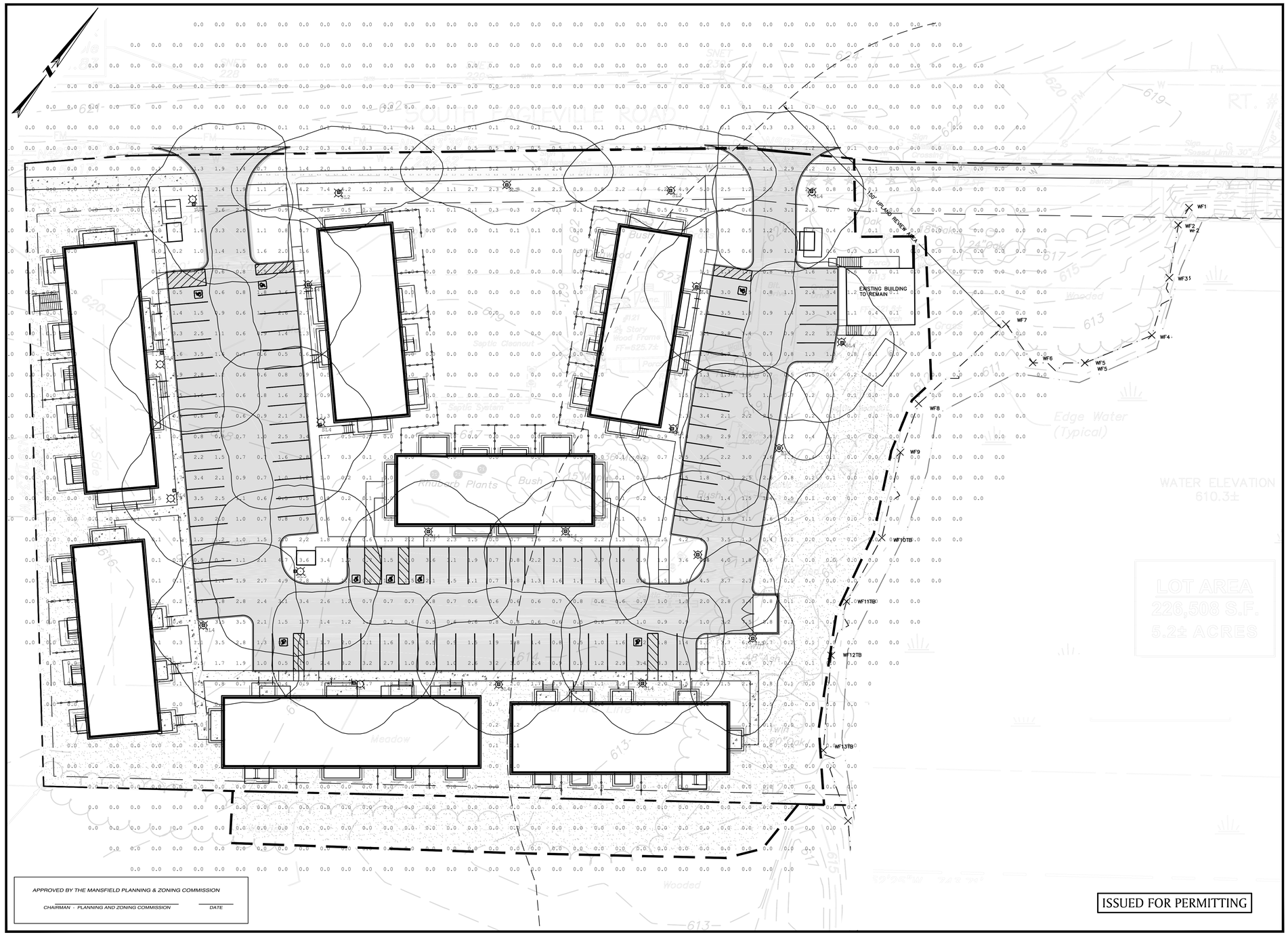

EAGLEVILLE GREEN - NOVEMBER 25, 2019

EAGLEVILLE GREEN

113-121 SOUTH
EAGLEVILLE ROAD
IN
MANSFIELD
CONNECTICUT

PHOTOMETRICS PLAN

NOVEMBER 25, 2019

REVISIONS:

1	01/20/2020	PER TOWN COMMENTS
2	01/31/2020	PER TOWN COMMENTS
3	02/12/2020	PER TEST PIT RESULTS

PREPARED FOR:
MANSFIELD HOUSING DEV. CORP.
309 MAPLE ROAD
STORRS, CT 06268

BSC GROUP
300 Winding Brook Drive
Glastonbury, Connecticut 06033
860 652 8227

© 2019 BSC GROUP, INC.

SCALE: 1" = 20'
0 10 20 40 FEET

FILE: 8374900-PHOTO.DWG
DWG. NO:
JOB. NO: 83749.00
L-2.0

1 A1.1 CONCEPTUAL SITE PLAN
SCALE: 1" = 30'-0"

THESE DOCUMENTS ARE PROGRESS DRAWINGS PREPARED AS A SUPPLEMENT TO THE ZONING BOARD APPLICATION. THEY ARE NOT FOR CONSTRUCTION. IN THE CASE OF CONFLICTS THE ENGINEERING SET PREPARED BY BSC GROUP SHALL PREVAIL.

EAGLEVILLE GREEN	MANSFIELD NON-PROFIT HOUSING DEVELOPMENT CORP.	dorgan architecture & planning	1 Revision #1 2/11/20 REVISIONS:	SHEET TITLE: SITE PLAN PROJECT NAME: EAGLEVILLE GREEN PROJECT #: DRAWN BY: DATE: 2/6/20	SHEET NUMBER A1.1

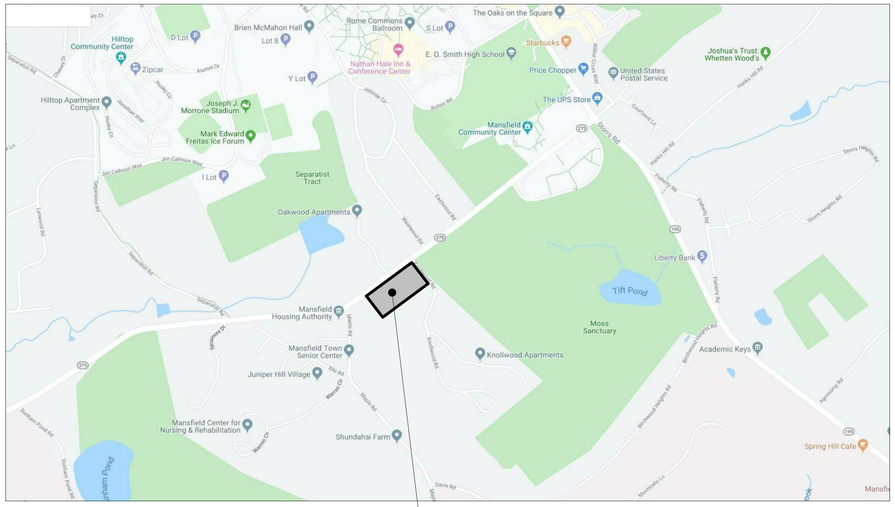

1 A1.1a LOCATION PLAN
SCALE: 1" = 1'-0"

PARKING

(79) REGULAR SPACES
(8) ACCESSIBLE SPACES

(87) TOTAL SPACES

87 SPACES/ 42 DWELLING UNITS = 2.07 SPACES/ UNIT

UNITS PER ACRE

PROPERTY AREA = +/-5.2 ACRES

UNITS/ ACRE, TOTAL SITE = 8.08

PROPERTY AREA - WETLANDS AREA = +/-3.2 ACRES

UNITS/ ACRE, TOTAL SITE - WETLANDS = 13.125

BUILDING HEIGHT

MAXIMUM BUILDING HEIGHT
(WITHOUT CUPOLA) = 33'-0"
(WITH CUPOLA) = 38'-6"

UNIT BREAKDOWN

UNIT TYPE	UNIT QUANTITY.		AFFORDABLE UNITS*				BEDS		BATHS		1/2 BATHS		NET AREA		COMMENTS
	QTY.	TOTAL	80%	60%	TOTAL	RENT	PER UNIT	TOTAL	PER UNIT	TOTAL	PER UNIT	TOTAL	PER UNIT	TOTAL	
1 BEDROOM - TYPE #1	6		2	1			1	6	1	6	0	0	706	4,236	Typical 1st floor unit
1 BEDROOM - TYPE #2	8		1	2			1	8	1	8	0	0	780	6,240	Typical 2nd floor unit
1 BEDROOM - TYPE #3	1						1	1	1	1	0	0	780	780	2nd floor - stacked over 3 BR
1 BEDROOM - TYPE #4	1						1	1	1	1	0	0	750	750	2nd floor - stacked over 3 BR
1 BEDROOM - ACCESSIBLE	2						1	2	1	2	0	0	706	1,412	1st floor - accessible
Total 1 BEDROOM UNITS		**18**	3	3	**6**										
2 BEDROOM - TYPE #1	12		2	2			2	24	1	12	1	12	1,045	12,540	Typical 2 story unit
2 BEDROOM - TYPE #2 (ACCESSIBLE)	2						2	4	1	2	0	0	980	1,960	1st floor - accessible
2 BEDROOM - TYPE #3	2		1				2	4	1	2	0	0	1,060	2,120	2nd floor - stacked over 2 BR
2 BEDROOM - EXISTING BUILDING	1						2	2	1	1	1	1	1,200	1,200	Renovated exist. residence
Total 2 BEDROOM UNITS		**17**	3	2	**5**										
3 BEDROOM - TYPE #1	6		1	1			3	18	2	12	0	0	1,260	7,560	Typical 2 story unit
3 BEDROOM - TYPE #2 (ACCESSIBLE)	1						3	3	2	2	0	0	1,400	1,400	1st floor - accessible
Total 3 BEDROOM UNITS		**7**	1	1	**2**										
TOTAL		**42**	7	6	**13 (31%)**			73		49		13		40,198	

*** THIS PLAN ILLUSTRATES A TYPICAL DISTRIBUTION OF AFFORDABLE UNITS. THE LOCATION OF AFFORDABLE UNITS WILL FLOAT DEPENDING ON THE NEEDS AND PREFERENCES OF RESIDENTS.**

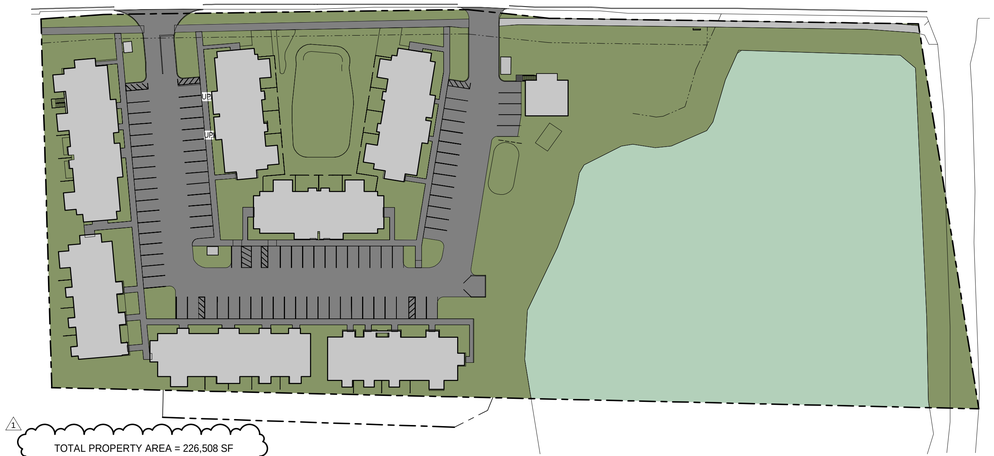

TOTAL PROPERTY AREA = 226,508 SF
BLDG. COVERAGE AREA = 14.40%

2 A1.1a SITE COVERAGE PLAN
SCALE: 1" = 50'-0"

PROJECT NORTH

3 A1.1a DWELLING UNIT BREAKDOWN
SCALE: 1" = 50'-0"

PROJECT NORTH

THESE DOCUMENTS ARE PROGRESS DRAWINGS PREPARED AS A SUPPLEMENT TO THE ZONING BOARD APPLICATION. THEY ARE NOT FOR CONSTRUCTION. IN THE CASE OF CONFLICTS THE ENGINEERING SET PREPARED BY BSC GROUP SHALL PREVAIL.

EAGLEVILLE GREEN

MANSFIELD NON-PROFIT HOUSING DEVELOPMENT CORP.

da&p dorgan architecture & planning

1	Revision #1	2/11/20

REVISIONS:

SHEET TITLE: SITE INFORMATION

PROJECT NAME: EAGLEVILLE GREEN

PROJECT #:

DRAWN BY:

DATE: 2/6/20

SHEET NUMBER A1.1a

WELTI GEOTECHNICAL, P.C.

227 Williams Street · P.O. Box 397
Glastonbury, CT 06033-0397

(860) 633-4623 / FAX (860) 657-2514

October 4, 2019

Ms. Rebecca M. Fields
Executive Director
Mansfield Housing Authority
309 Maple Road
Storrs, CT 06268

Re: Geotechnical Study for Proposed Housing, 113-121 South Eagleville Road, Storrs, CT

Dear Ms. Fields:

1.0 Herewith are the boring data pertaining to the above. Twelve borings were drilled to maximum depth of 26.5 feet or to auger refusal if above 26.5 feet. The boring locations are shown on the attached plan. *The borings were drilled by Clarence Welti Associates, Inc. and sampling was conducted by this firm solely to obtain indications of subsurface conditions as part of a geotechnical exploration program. No services were performed to evaluate subsurface environmental conditions.* Grain size gradation tests and water content tests were performed on six representative soil samples taken from the borings. The results of those tests are included in the Appendix.

2.0 The **Subject Project** will include the construction of a seven two story slab on grade housing structures with a total of 42 apartment units. The site development will include pavements for 72 regular spaces and 8 handicapped accessible spaces. The existing grades in the proposed developed area range from about Elev.622 to about Elev.612. There are two existing 2 ½ story residences on the site. At least one would be removed based on the proposed apartment building configuration. The site abuts a large wetland to the east of the developed area. A proposed grading plan was not available for this study.

3.0 The **Geologic Origin** of the natural inorganic soils consist generally of glacial lake deposits atop glacial moraine deposit. The lake deposits consist generally of medium compact to loose sand with trace to silt and gravel; or silt and fine sand.

3.1 The **Soils Cross Section** from the borings is generally as follows:

Topsoil to 6" to 12"

Locally Subsoil; fine to medium SAND, little to some Silt, trace Roots to 1.5 to 3 feet, loose

WELTI GEOTECHNICAL, P.C.

227 Williams Street · P.O. Box 397
Glastonbury, CT 06033-0397

(860) 633-4623 / FAX (860) 657-2514

October 4, 2019

Ms. Rebecca M. Fields
Executive Director
Mansfield Housing Authority
309 Maple Road
Storrs, CT 06268

Re: Geotechnical Study for Proposed Housing, 113-121 South Eagleville Road, Storrs, CT

Dear Ms. Fields:

1.0 Herewith are the boring data pertaining to the above. Twelve borings were drilled to maximum depth of 26.5 feet or to auger refusal if above 26.5 feet. The boring locations are shown on the attached plan. *The borings were drilled by Clarence Welti Associates, Inc. and sampling was conducted by this firm solely to obtain indications of subsurface conditions as part of a geotechnical exploration program. No services were performed to evaluate subsurface environmental conditions.* Grain size gradation tests and water content tests were performed on six representative soil samples taken from the borings. The results of those tests are included in the Appendix.

2.0 The **Subject Project** will include the construction of a seven two story slab on grade housing structures with a total of 42 apartment units. The site development will include pavements for 72 regular spaces and 8 handicapped accessible spaces. The existing grades in the proposed developed area range from about Elev.622 to about Elev.612. There are two existing 2 ½ story residences on the site. At least one would be removed based on the proposed apartment building configuration. The site abuts a large wetland to the east of the developed area. A proposed grading plan was not available for this study.

3.0 The **Geologic Origin** of the natural inorganic soils consist generally of glacial lake deposits atop glacial moraine deposit. The lake deposits consist generally of medium compact to loose sand with trace to silt and gravel; or silt and fine sand.

3.1 The **Soils Cross Section** from the borings is generally as follows:

Topsoil to 6" to 12"

Locally Subsoil; fine to medium SAND, little to some Silt, trace Roots to 1.5 to 3 feet, loose

Glacial Lake Soils: Stratified fine to fine to coarse SAND, trace to little Silt and Gravel; or SILT and fine SAND to 4.5 to 26+ feet, medium compact to about 8 feet and loose to medium compact below 8 feet

Moraine Soils: fine to medium SAND, some Silt, little Gravel and Cobbles to auger refusal on probable bedrock at 9.5 feet to 26+ feet, dense to very dense

3.2 The **ground water** in the boreholes was at 2 to 10 feet below the existing grades at the completion of the borings (Elev. 610 to Elev.612). It is possible with heavy spring rains the water table could rise locally for short periods to 2 to 3 feet above the wetlands water level of Elev. 610. This mounding of the water table would normally be some distance from the wetland and could possibly be atop low permeability soil. Building slabs on grade should be kept above Elev. 616 and foundations should if possible be kept above Elev. 614.

4.0 The **Criteria for Foundation Type and Loading** are as follows:

1. The maximum total settlement should not exceed 3/4" and the maximum differential settlement shall not exceed ½ the maximum settlement.

2. The Foundations and Structures must address the seismic section of the building code

3. The Slab at Grade floors must not settle differentially more than ½" in excess of the main structure subsidence.

4.1 Regarding item 2 (above), the seismic site soil profile classification can be **"D"**. The mapped MCE spectral response acceleration values for Mansfield, CT are $\mathbf{S_1 = 0.062}$ for one second period and $\mathbf{S_S = 0.173}$ for short period. For transfer of ground shear into the soil the ultimate friction factor can be **0.60.**

5.0 Regarding the **Foundation Type,** the building can be supported on spread footings. The footing sub grades can be on the natural inorganic soils, or on a controlled fill placed after the removal of any existing fills, topsoil and locally frost disturbed subsoils (assume frost disturbed soil to at least 2.5 feet below the existing grades). There should be minimum 4" layer of processed base or 3/8" crushed stone on a geotextile beneath the footings on the natural soils. Controlled fills should conform to section 6.0 below and should extend horizontally beyond the footings for a distance equal to at least the depth of fill beneath the footings.

5.1 The **Allowable Bearing Pressure** for spread footings on the crushed stone layer atop the natural soils or on the controlled fill can be 4,000 psf. The allowable loading can be increased by 1/3 for seismic or wind loading. At retaining walls the maximum pressure on the toe can be 50% higher than the average pressure, cited above.

5.2 The static **Lateral Soil Loading** on retaining walls that are part of the building (if any), should be based on at-rest pressure using the coefficient $\mathbf{K_O = 0.45}$ as cited in the table below. Lateral soil loading on retaining walls apart from the building can be designed with active pressure using the coefficient $\mathbf{K_A = 0.28}$ for level backfill. The ultimate sliding coefficient for concrete cast on crushed stone or on controlled fill is **0.60.**

5.3 The **Frost Protection Depth** is 3.5 feet below the finish grades in areas, which are exposed to weather.

5.4 Summary of Foundation Design Parameters:

Parameter	Value
Allowable Bearing Pressure	4,000 psf
Soil Unit Weight (Backfill) *	125 pcf
Internal Friction Angle (Backfill) *	34°
At-Rest Pressure Coefficient, K_O	0.45
Active Pressure Coefficient, K_A (level backfill)	0.28
Ultimate Sliding Coefficient, concrete on crushed stone over soil	0.60
Seismic Site Soil Profile Classification	D
Mapped MCE Spectral Response Acceleration for one second period, S_1	0.062
Mapped MCE Spectral Response Acceleration for short period, S_S	0.173
Frost Protection Depth	3.5 feet

* Backfill material conforming to section 6.0 below

6.0 Regarding **Controlled Fill, Backfill for Retaining Walls and Excavations at Columns and Walls, plus Slab at Grade Underlayment** (to 4" below the slab bottom) the material should conform to the following or be 3/8" crushed stone:

Percent Passing	Sieve Size
100	3.5"

50 - 100	3/4"
25 - 75	No.4

The fraction, passing the No.4 sieve should have less than 15%, passing the No. 200 sieve.

All backfill and fill must be compacted to at least 95% of modified optimum density.

6.1 All existing fill, topsoil and subsoils should be removed beneath the building floor and replaced with controlled fill conforming to section 6.0 above. There should be at least 18" of controlled fill beneath the floor slabs. The final 4" layer beneath the floor slab should be 3/8" crushed stone or 3/4"minus processed base. A vapor retarder is required beneath the slab at grade floors.

7.0 Regarding **Earthwork,** excavations in the natural soils will fall in OSHA Class C. This will require sloping of excavations, which are unshored and exceed 5 feet in height, to be cut back to slopes less than 34° from the horizontal (1.5H:1V).

8.0 Regarding **New Pavements,** there should be at least 10" of CTDOT gravel subbase or material conforming to section 6.0 above placed beneath the pavement sections. If the sub grades are on wet subsoils, the subsoils would probably have to be removed to provide a stable sub grade for placement of fills and the pavement sections. The recommended pavement sections above the subbase are as follows:

For main access road; 4" of bituminous concrete (1.5" Class 2 over 2.5" Class 1) on 6" of processed stone base

For car parking areas; 3" of bituminous concrete on 6" of processed stone base

For concrete pavements; (1) truck access; 7" concrete over 8" of processed stone base, (2) for passenger vehicles; 5" of concrete on 8" processed stone base.

For pavers: below sand bedding over 8" of processed stone base

8.1 ***For concrete aprons contiguous to the building there should be free draining material, either gravel subbase or controlled fill conforming to section 6.0 above, to 18" below grade. This is to avoid movement of the slab at flush doorways.*** The modulus of sub grade reaction atop the subbase would be at least 200 pci.

9.0 This report has been prepared for specific application to the subject project in accordance with generally accepted soil and foundation engineering practices. No other warranty, express or implied, is made. In the event that any changes in the nature, design and location of structures are planned, the conclusions and recommendations contained in this report should not be considered valid unless the changes are reviewed and conclusions of this report modified or verified in writing.

The analyses and recommendations submitted in this report are based in part upon data obtained from referenced explorations. The extent of variations between explorations may not become evident until construction. If variations then appear evident, it will be necessary to re-evaluate the recommendations of this report.

Welti Geotechnical, P.C., should perform a general review of the final design and specifications in order that geotechnical design recommendations may be properly interpreted and implemented as they were intended.

If you have any questions, please call our office.

Very truly yours,

Max Welti, P.E.
President, Welti Geotechnical, P.C.

Clarence Welti Ph.D., P. E.

APPENDIX

Boring Location Plan

Boring Data

Laboratory Test Results

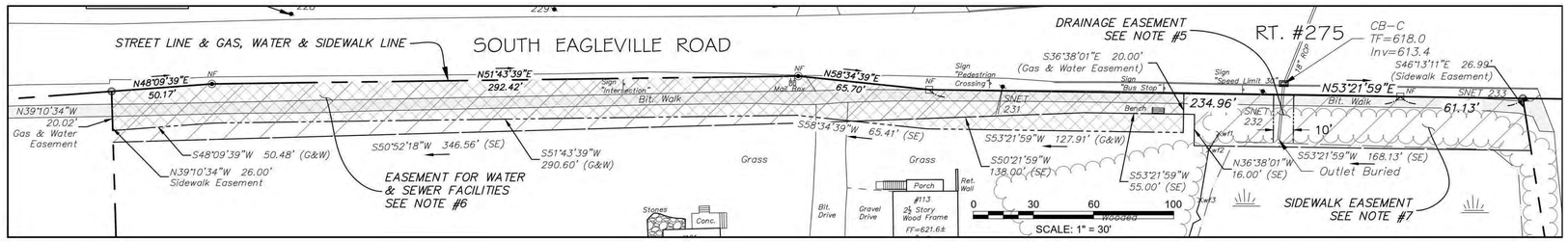

DETAIL DEPICTING EASEMENTS
Scale 1"=30'

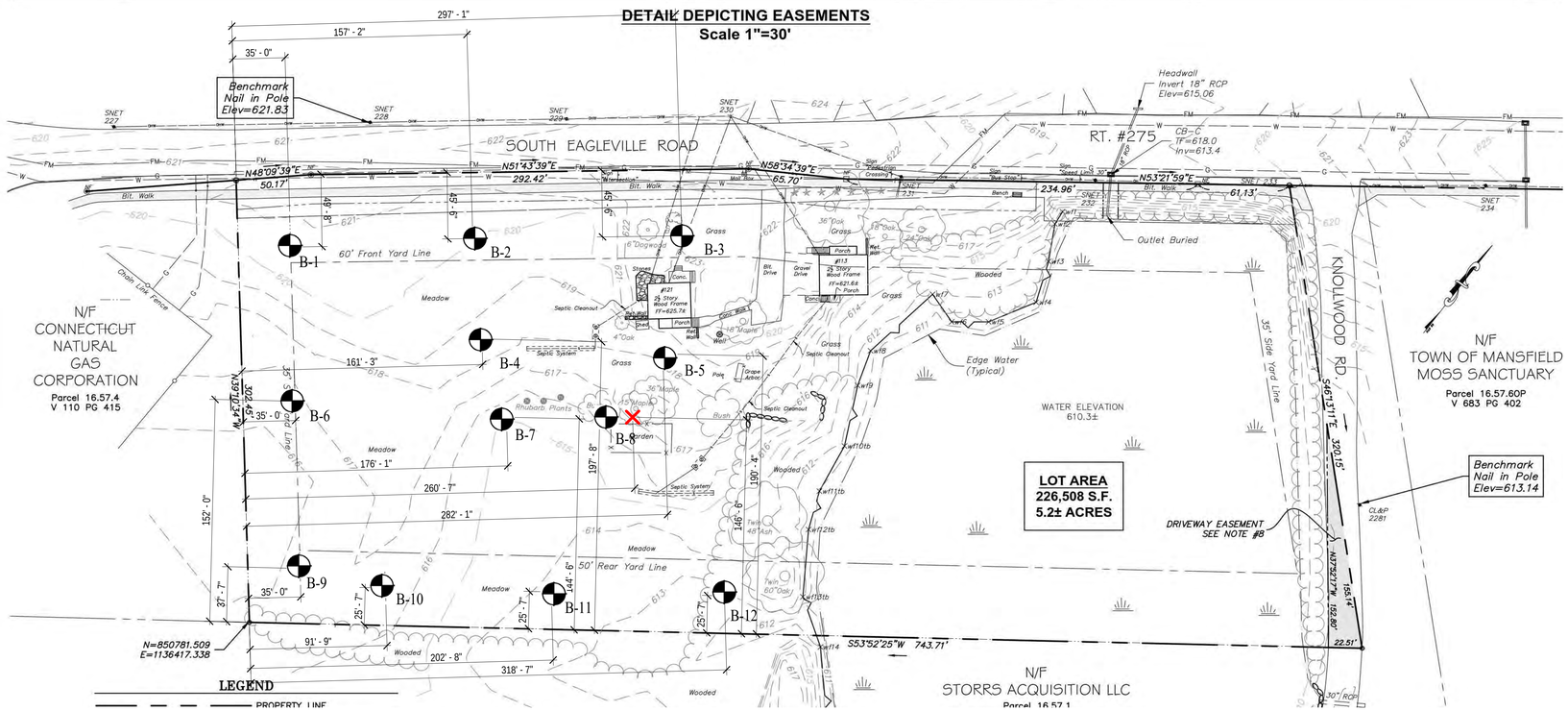

LEGEND

PROPERTY LINE

TEST BORING LOCATIONS
CLARENCE WELTI ASSOCIATES, INC.
9/26/19

1 A1.1 CONCEPTUAL SITE PLAN
SCALE: 1" = 30'-0"

PARKING

(73) REGULAR SPACES
(8) ACCESSIBLE SPACES

(81) TOTAL SPACES

81 SPACES/ 42 DWELLING UNITS = 1.92 SPACES/ UNIT

BUILDING HEIGHT

MAXIMUM BUILDING HEIGHT
(WITHOUT CUPOLA) = 33'-0"
(WITH CUPOLA) = 38'-6"

UNITS PER ACRE

PROPERTY AREA = 226,508 SF = +/-5.2 ACRES

UNITS/ ACRE, TOTAL SITE = 8.08

PROPERTY AREA - WETLANDS AREA = 150,720 SF = +/-3.46 ACRES

UNITS/ ACRE, TOTAL SITE - WETLANDS = 12.14

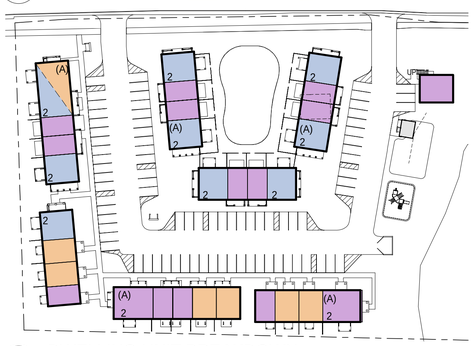

2 A1.1 DWELLING UNIT BREAKDOWN
SCALE: 1" = 60'-0"

LEGEND

1 BED
2 BED
3 BED

(A) = ACCESSIBLE GROUND FLOOR UNIT

ACCESSIBLE & 1 BED UNITS ARE 1 STORY/ STACKED.
ALL OTHER UNITS ARE 2 STORIES

PROJECT NORTH

TOTAL PROPERTY AREA = 226,508 SF
BLDG. COVERAGE AREA = 32,620 SF
COVERAGE % = 14.40%

3 A1.1 SITE COVERAGE PLAN
SCALE: 1" = 80'-0"

UNIT BREAKDOWN

SOUTH EAGLEVILLE RD. HOUSING
MANSFIELD NON-PROFIT HOUSING DEVELOPMENT CORP.

UNIT TYPE	UNIT QTY.	BEDS		BATHS		1/2 BATHS		NET AREA	
		PER UNIT	TOTAL	PER UNIT	TOTAL	PER UNIT	TOTAL	PER UNIT	TOTAL
1 BEDROOM - TYPE #1	6	1	6	1	6	0	0	706	4,236
1 BEDROOM - TYPE #2	8	1	8	1	8	0	0	780	6,240
1 BEDROOM - TYPE #3	1	1	1	1	1	0	0	780	780
1 BEDROOM - TYPE #4	1	1	1	1	1	0	0	750	750
1 BEDROOM - ACCESSIBLE	2	1	2	1	2	0	0	706	1,412
2 BEDROOM - TYPE #1	12	2	24	1	12	1	12	1,045	12,540
2 BEDROOM - TYPE #2 (ACCESSIBLE)	2	2	4	1	2	0	0	980	1,960
2 BEDROOM - TYPE #3	2	2	4	1	2	0	0	1,060	2,120
2 BEDROOM - EXISTING BUILDING	1	2	2	1	1	1	1	1,200	1,200
3 BEDROOM - TYPE #1	6	3	18	2	12	0	0	1,260	7,560
3 BEDROOM - TYPE #2 (ACCESSIBLE)	1	3	3	2	2	0	0	1,400	1,400
TOTAL	42		73		49		13		40,198

S. EAGLEVILLE RD. HOUSING

MANSFIELD NON-PROFIT HOUSING DEVELOPMENT CORP.

dorgan architecture & planning

REVISIONS:

SHEET TITLE: SITE PLAN

PROJECT NAME: S. EAGLEVILLE RD. HOUSING

PROJECT #:

DRAWN BY:

DATE: 5/17/19

SHEET NUMBER

A1.1

CLARENCE WELTI ASSOC., INC.
P.O. BOX 397
GLASTONBURY, CONN 06033

CLIENT
MANSFIELD HOUSING AUTHORITY

PROJECT NAME
PROPOSED HOUSING

LOCATION
113-121 SOUTH EAGLEVILLE ROAD, MANSFIELD, CT

	AUGER	CASING	SAMPLER	CORE BAR.
TYPE	HSA		SS	
SIZE I.D.	3.75"		1.375"	
HAMMER WT.			140lbs	
HAMMER FALL			30"	

OFFSET
LINE & STA.
N. COORDINATE
E. COORDINATE

SURFACE ELEV. 620.5
HOLE NO. **B-1**

GROUND WATER OBSERVATIONS
AT 10.0 FT. AFTER 0 HOURS
AT FT. AFTER HOURS

START DATE 9/24/19
FINISH DATE 9/24/19

DEPTH	SAMPLE NO.	BLOWS/6"	DEPTH	A	STRATUM DESCRIPTION + REMARKS		ELEV.
0	1	1-2-1-10	0.0'-2.0'		TOPSOIL	0.50	620
					BR.FINE-MED.SAND, LITTLE SILT, TRACE GRAVEL	2.0	
	2	9-15-20-15	2.0'-4.0'		LIGHT BR. FINE-CRS.SAND, LITTLE SILT & GRAVEL		
	3	9-11-11-13	4.0'-6.0'				
5							615
10	4	3-3-4	10.0'-11.5'		BR.FINE SAND, LITTLE SILT	10.0	610
15	5	2-3-4	15.0'-16.5'		GREY/BR.SILT, TRACE FINE SAND	15.0	605
20	6	3-3-3	20.0'-21.5'				600
					GREY FINE-MED.SAND, SOME SILT, LITTLE GRAVEL	24.0	
25	7	60	25.0'-25.3'		BOTTOM OF BORING @ 25.4'	25.4	595
30							590
35							

LEGEND: COL. A:
SAMPLE TYPE: D=DRY A=AUGER C=CORE U=UNDISTURBED PISTON S=SPLIT SPOON
PROPORTIONS USED: TRACE=0-10% LITTLE=10-20% SOME=20-35% AND=35-50%

DRILLER: K. CHRISTIANA
INSPECTOR:

SHEET 1 OF 1 HOLE NO. **B-1**

CLARENCE WELTI ASSOC., INC.
P.O. BOX 397
GLASTONBURY, CONN 06033

CLIENT
MANSFIELD HOUSING AUTHORITY

PROJECT NAME
PROPOSED HOUSING

LOCATION
113-121 SOUTH EAGLEVILLE ROAD, MANSFIELD, CT

	AUGER	CASING	SAMPLER	CORE BAR.
TYPE	HSA		SS	
SIZE I.D.	3.75"		1.375"	
HAMMER WT.			140lbs	
HAMMER FALL			30"	

OFFSET
LINE & STA.
N. COORDINATE
E. COORDINATE

SURFACE ELEV. 620.0
HOLE NO. **B-2**

GROUND WATER OBSERVATIONS
AT 10.0 FT. AFTER 0 HOURS
AT FT. AFTER HOURS

START DATE 9/24/19
FINISH DATE 9/24/19

DEPTH	SAMPLE NO.	BLOWS/6"	DEPTH	A	STRATUM DESCRIPTION + REMARKS		ELEV.
0	1	1-0-1-0	0.0'-2.0'		TOPSOIL	0.50	620
					BR.FINE-MED.SAND, SOME SILT, TRACE GRAVEL		
	2	1-2-2-4	2.0'-4.0'				
					LIGHT BR.FINE SAND, LITTLE SILT	3.0	
	3	4-7-8-8	4.0'-6.0'				
5							615
					GREY FINE-MED.SAND, SOME SILT & GRAVEL, FEW COBBLES	8.0	
10	4	60	10.0'-10.3'				610
15	5	4-24-32	15.0'-16.5'				605
					BOTTOM OF BORING @ 19.5' (AUGER REFUSAL)	19.5	
20							600
25							595
30							590
35							585

LEGEND: COL. A:
SAMPLE TYPE: D=DRY A=AUGER C=CORE U=UNDISTURBED PISTON S=SPLIT SPOON
PROPORTIONS USED: TRACE=0-10% LITTLE=10-20% SOME=20-35% AND=35-50%

DRILLER: K. CHRISTIANA
INSPECTOR:

SHEET 1 OF 1 HOLE NO. **B-2**

CLARENCE WELTI ASSOC., INC. P.O. BOX 397 GLASTONBURY, CONN 06033	CLIENT MANSFIELD HOUSING AUTHORITY	PROJECT NAME PROPOSED HOUSING LOCATION 113-121 SOUTH EAGLEVILLE ROAD, MANSFIELD, CT

	AUGER	CASING	SAMPLER	CORE BAR.	OFFSET	SURFACE ELEV. 622.6	HOLE NO. B-3
TYPE	HSA		SS		LINE & STA.	GROUND WATER OBSERVATIONS	START DATE 9/24/19
SIZE I.D.	3.75"		1.375"		N. COORDINATE	AT none FT. AFTER 0 HOURS	
HAMMER WT.			140lbs			AT FT. AFTER HOURS	FINISH DATE 9/24/19
HAMMER FALL			30"		E. COORDINATE		

DEPTH	SAMPLE NO.	BLOWS/6"	DEPTH	A	STRATUM DESCRIPTION + REMARKS		ELEV.
0	1	1-2-4-3	0.0'-2.0'		TOPSOIL	0.50	
					BR.FINE-MED.SAND, SOME SILT, TRACE GRAVEL		
	2	2-3-2-12	2.0'-4.0'		LIGHT BR.FINE-MED.SAND, LITTLE SILT, TRACE GRAVEL	2.5	620
	3	10-28-60	4.0'-5.1'		GREY/BR. FINE-CRS.SAND, LITTLE TO SOME SILT & GRAVEL	4.5	
5							615
					BOTTOM OF BORING @ 9.5' (AUGER REFUSAL)	9.5	
10							610
15							605
20							600
25							595
30							590
35							

LEGEND: COL. A:

SAMPLE TYPE: D=DRY A=AUGER C=CORE U=UNDISTURBED PISTON S=SPLIT SPOON

PROPORTIONS USED: TRACE=0-10% LITTLE=10-20% SOME=20-35% AND=35-50%

DRILLER: K. CHRISTIANA

INSPECTOR:

SHEET 1 OF 1 HOLE NO. **B-3**

CLARENCE WELTI ASSOC., INC.
P.O. BOX 397
GLASTONBURY, CONN 06033

CLIENT
MANSFIELD HOUSING AUTHORITY

PROJECT NAME
PROPOSED HOUSING

LOCATION
113-121 SOUTH EAGLEVILLE ROAD, MANSFIELD, CT

	AUGER	CASING	SAMPLER	CORE BAR.
TYPE	HSA		SS	
SIZE I.D.	3.75"		1.375"	
HAMMER WT.			140lbs	
HAMMER FALL			30"	

OFFSET
LINE & STA.
N. COORDINATE
E. COORDINATE

SURFACE ELEV. 618.5
HOLE NO. **B-4**

GROUND WATER OBSERVATIONS
AT 8.0 FT. AFTER 0 HOURS
AT FT. AFTER HOURS

START DATE 9/25/19
FINISH DATE 9/25/19

DEPTH	SAMPLE NO.	BLOWS/6"	DEPTH	A	STRATUM DESCRIPTION + REMARKS		ELEV.
0	1	1-0-1-3	0.0'-2.0'		TOPSOIL	0.57	
					BR.FINE-MED.SAND, SOME SILT, TRACE ROOTS		
	2	3-7-7-7	2.0'-4.0'				
					LIGHT BR.FINE-CRS.SAND, TRACE SILT & FINE GRAVEL	3.0	615
	3	5-6-7-8	4.0'-6.0'				
5							
							610
10	4	2-3-3	10.0'-11.5'		GREY/BR.FINE-MED.SAND, LITTLE SILT, TRACE GRAVEL	10.0	
							605
15	5	1-3-15	15.0'-16.5'				
					GREY FINE-MED.SAND, SOME SILT, LITTLE GRAVEL	16.0	
							600
					BOTTOM OF BORING @ 19.0' (AUGER REFUSAL)	19.0	
20							
							595
25							
							590
30							
							585
35							

LEGEND: COL. A:
SAMPLE TYPE: D=DRY A=AUGER C=CORE U=UNDISTURBED PISTON S=SPLIT SPOON
PROPORTIONS USED: TRACE=0-10% LITTLE=10-20% SOME=20-35% AND=35-50%

DRILLER: K. CHRISTIANA
INSPECTOR:

SHEET 1 OF 1 HOLE NO. **B-4**

CLARENCE WELTI ASSOC., INC.
P.O. BOX 397
GLASTONBURY, CONN 06033

CLIENT
MANSFIELD HOUSING AUTHORITY

PROJECT NAME
PROPOSED HOUSING

LOCATION
113-121 SOUTH EAGLEVILLE ROAD, MANSFIELD, CT

	AUGER	CASING	SAMPLER	CORE BAR.
TYPE	HSA		SS	
SIZE I.D.	3.75"		1.375"	
HAMMER WT.			140lbs	
HAMMER FALL			30"	

OFFSET
LINE & STA.
N. COORDINATE
E. COORDINATE

SURFACE ELEV. 618.3
HOLE NO. B-5

GROUND WATER OBSERVATIONS
AT 8.0 FT. AFTER 0 HOURS
AT FT. AFTER HOURS

START DATE 9/26/19
FINISH DATE 9/26/19

DEPTH	SAMPLE NO.	BLOWS/6"	DEPTH	A	STRATUM DESCRIPTION + REMARKS		ELEV.
0	1	1-1-1-1	0.0'-2.0'		TOPSOIL		
					BR.FINE-CRS.SAND, LITTLE SILT, TRACE GRAVEL & ROOTS	1.0	
	2	6-10-10-8	2.0'-4.0'		BR.FINE-CRS.SAND, LITTLE GRAVEL, TRACE SILT	2.5	615
	3	6-6-9-9	4.0'-6.0'				
5					LIGHT BR.FINE-MED.SAND, TRACE SILT	5.0	
					GREY/BR. FINE-CRS.SAND, SOME SILT, LITTLE GRAVEL	8.0	610
10	4	60	10.0'-10.5'				
					BOTTOM OF BORING @ 11.0' (AUGER REFUSAL)	11.0	
							605
15							
							600
20							
							595
25							
							590
30							
							585
35							

LEGEND: COL. A:
SAMPLE TYPE: D=DRY A=AUGER C=CORE U=UNDISTURBED PISTON S=SPLIT SPOON
PROPORTIONS USED: TRACE=0-10% LITTLE=10-20% SOME=20-35% AND=35-50%

DRILLER: K. CHRISTIANA
INSPECTOR:

SHEET 1 OF 1 HOLE NO. **B-5**

CLARENCE WELTI ASSOC., INC. P.O. BOX 397 GLASTONBURY, CONN 06033	CLIENT MANSFIELD HOUSING AUTHORITY	PROJECT NAME PROPOSED HOUSING LOCATION 113-121 SOUTH EAGLEVILLE ROAD, MANSFIELD, CT

	AUGER	CASING	SAMPLER	CORE BAR.
TYPE	HSA		SS	
SIZE I.D.	3.75"		1.375"	
HAMMER WT.			140lbs	
HAMMER FALL			30"	

OFFSET
LINE & STA.
N. COORDINATE
E. COORDINATE

SURFACE ELEV. 616.8 | HOLE NO. **B-6**

GROUND WATER OBSERVATIONS
AT 6.0 FT. AFTER 0 HOURS
AT FT. AFTER HOURS

START DATE 9/24/19
FINISH DATE 9/24/19

DEPTH	SAMPLE NO.	BLOWS/6"	DEPTH	A	STRATUM DESCRIPTION + REMARKS		ELEV.
0	1	1-1-1-2	0.0'-2.0'		TOPSOIL		
					BR.FINE-CRS.SAND, SOME SILT, TRACE GRAVEL	0.66	
							615
	2	2-3-3-4	2.0'-4.0'		LIGHT BR. FINE-MED.SAND, TRACE TO LITTLE SILT	2.5	
	3	4-5-6-6	4.0'-6.0'				
5					GREY/BR.FINE SAND, TRACE TO LITTLE SILT	5.0	
							610
10	4	3-2-2	10.0'-11.5'				
							605
15	5	1-2-2	15.0'-16.5'				
							600
20	6	2-1-2	20.0'-21.5'				
							595
25	7	2-3-4	25.0'-27.0'				
					BOTTOM OF BORING @ 26.5'	26.5	590
30							
							585
35							

LEGEND: COL. A:

SAMPLE TYPE: D=DRY A=AUGER C=CORE U=UNDISTURBED PISTON S=SPLIT SPOON

PROPORTIONS USED: TRACE=0-10% LITTLE=10-20% SOME=20-35% AND=35-50%

DRILLER: K. CHRISTIANA
INSPECTOR:

SHEET 1 OF 1 | HOLE NO. **B-6**

CLARENCE WELTI ASSOC., INC. P.O. BOX 397 GLASTONBURY, CONN 06033	CLIENT MANSFIELD HOUSING AUTHORITY	PROJECT NAME PROPOSED HOUSING LOCATION 113-121 SOUTH EAGLEVILLE ROAD, MANSFIELD, CT

	AUGER	CASING	SAMPLER	CORE BAR.
TYPE	HSA		SS	
SIZE I.D.	3.75"		1.375"	
HAMMER WT.			140lbs	
HAMMER FALL			30"	

OFFSET
LINE & STA.
N. COORDINATE
E. COORDINATE

SURFACE ELEV. 615.0 | HOLE NO. **B-7**

GROUND WATER OBSERVATIONS
AT 6.0 FT. AFTER 0 HOURS
AT FT. AFTER HOURS

START DATE 9/25/19
FINISH DATE 9/25/19

DEPTH	SAMPLE NO.	BLOWS/6"	DEPTH	A	STRATUM DESCRIPTION + REMARKS		ELEV.
0	1	1-1-1-1	0.0'-2.0'		TOPSOIL	0.56	615
					BR.FINE-MED.SAND, LITTLE TO SOME SILT		
	2	1-0-2-4	2.0'-4.0'			3.0	
					BR.FINE-CRS.SAND, LITTLE SILT		
	3	2-4-4-5	4.0'-6.0'			4.5	
5					BR. FINE-CRS.SAND, LITTLE SILT, TRACE GRAVEL		610
						8.0	
					GREY/BR.FINE-CRS.SAND, TRACE SILT & FINE GRAVEL		
10	4	1-2-2	10.0'-11.5'				605
15	5	2-3-3	15.0'-16.5'				600
20						20.0	595
	6	15-26-24	20.0'-21.5'		GREY/BR.FINE-MED.SAND, SOME SILT, LITTLE GRAVEL		
						23.0	
					BOTTOM OF BORING @ 23.0' (AUGER REFUSAL)		
25							590
30							585
35							580

LEGEND: COL. A:
SAMPLE TYPE: D=DRY A=AUGER C=CORE U=UNDISTURBED PISTON S=SPLIT SPOON
PROPORTIONS USED: TRACE=0-10% LITTLE=10-20% SOME=20-35% AND=35-50%

DRILLER: K. CHRISTIANA
INSPECTOR:

SHEET 1 OF 1 | HOLE NO. **B-7**

CLARENCE WELTI ASSOC., INC.
P.O. BOX 397
GLASTONBURY, CONN 06033

CLIENT
MANSFIELD HOUSING AUTHORITY

PROJECT NAME
PROPOSED HOUSING

LOCATION
113-121 SOUTH EAGLEVILLE ROAD, MANSFIELD, CT

	AUGER	CASING	SAMPLER	CORE BAR.
TYPE	HSA		SS	
SIZE I.D.	3.75"		1.375"	
HAMMER WT.			140lbs	
HAMMER FALL			30"	

OFFSET
LINE & STA.
N. COORDINATE
E. COORDINATE

SURFACE ELEV. 616.0
HOLE NO. **B-8**

GROUND WATER OBSERVATIONS
AT 5.0 FT. AFTER 0 HOURS
AT FT. AFTER HOURS

START DATE 9/26/19
FINISH DATE 9/26/19

DEPTH	SAMPLE NO.	BLOWS/6"	DEPTH	A	STRATUM DESCRIPTION + REMARKS		ELEV.
0	1	1-0-1-2	0.0'-2.0'		TOPSOIL	0.56	
					BR.FINE-CRS.SAND, SOME SILT, TRACE GRAVEL		615
	2	1-2-3-2	2.0'-4.0'			3.0	
					BR.FINE-MED.SAND, TRACE SILT		
	3	2-4-4-5	4.0'-6.0'			4.5	
5					GREY/BR.SILT, SOME FINE SAND		
							610
10						10.0	
	4	17-20-17	10.0'-11.5'		GREY/BR.FINE-CRS.SAND, SOME SILT & GRAVEL		
							605
						13.5	
					BOTTOM OF BORING @ 13.5' (AUGER REFUSAL)		
15							
							600
20							
							595
25							
							590
30							
							585
35							

LEGEND: COL. A:
SAMPLE TYPE: D=DRY A=AUGER C=CORE U=UNDISTURBED PISTON S=SPLIT SPOON
PROPORTIONS USED: TRACE=0-10% LITTLE=10-20% SOME=20-35% AND=35-50%

DRILLER: K. CHRISTIANA
INSPECTOR:

SHEET 1 OF 1 HOLE NO. **B-8**

CLARENCE WELTI ASSOC., INC. P.O. BOX 397 GLASTONBURY, CONN 06033	CLIENT MANSFIELD HOUSING AUTHORITY	PROJECT NAME PROPOSED HOUSING LOCATION 113-121 SOUTH EAGLEVILLE ROAD, MANSFIELD, CT

	AUGER	CASING	SAMPLER	CORE BAR.
TYPE	HSA		SS	
SIZE I.D.	3.75"		1.375"	
HAMMER WT.			140lbs	
HAMMER FALL			30"	

OFFSET
LINE & STA.
N. COORDINATE
E. COORDINATE

SURFACE ELEV. 616.4 | HOLE NO. **B-9**

GROUND WATER OBSERVATIONS
AT 4.0 FT. AFTER 0 HOURS
AT FT. AFTER HOURS

START DATE 9/25/19
FINISH DATE 9/25/19

DEPTH	SAMPLE NO.	BLOWS/6"	DEPTH	A	STRATUM DESCRIPTION + REMARKS		ELEV.
0	1	1-1-1-1	0.0'-2.0'		TOPSOIL	0.50	
					BR.FINE-MED.SAND, SOME SILT, TRACE GRAVEL		615
	2	4-6-6-6	2.0'-4.0'			3.0	
					BR.FINE-MED. SAND, TRACE SILT & GRAVEL		
	3	4-5-5-6	4.0'-6.0'				
5						6.0	
					GREY/BR.FINE-MED.SAND, LITTLE SILT		610
10	4	2-2-2	10.0'-11.5'				
							605
15	5	3-3-4	15.0'-16.5'				
							600
20	6	2-3-3	20.0'-21.5'				
							595
25	7	4-6-7	25.0'-26.5'				
						26.5	590
					BOTTOM OF BORING @ 26.5'		
30							
							585
35							

LEGEND: COL. A:
SAMPLE TYPE: D=DRY A=AUGER C=CORE U=UNDISTURBED PISTON S=SPLIT SPOON
PROPORTIONS USED: TRACE=0-10% LITTLE=10-20% SOME=20-35% AND=35-50%

DRILLER: K. CHRISTIANA
INSPECTOR:

SHEET 1 OF 1 | HOLE NO. **B-9**

CLARENCE WELTI ASSOC., INC.
P.O. BOX 397
GLASTONBURY, CONN 06033

CLIENT
MANSFIELD HOUSING AUTHORITY

PROJECT NAME
PROPOSED HOUSING

LOCATION
113-121 SOUTH EAGLEVILLE ROAD, MANSFIELD, CT

	AUGER	CASING	SAMPLER	CORE BAR.
TYPE	HSA		SS	
SIZE I.D.	3.75"		1.375"	
HAMMER WT.			140lbs	
HAMMER FALL			30"	

OFFSET
LINE & STA.
N. COORDINATE
E. COORDINATE

SURFACE ELEV. 616.5
HOLE NO. **B-10**

GROUND WATER OBSERVATIONS
AT 5.0 FT. AFTER 0 HOURS
AT FT. AFTER HOURS

START DATE 9/25/19
FINISH DATE 9/25/19

DEPTH	SAMPLE NO.	BLOWS/6"	DEPTH	A	STRATUM DESCRIPTION + REMARKS		ELEV.
0	1	1-1-0-2	0.0'-2.0'		TOPSOIL	0.56	
					BR.FINE-MED.SAND, LITTLE TO SOME SILT, TRACE GRAVEL		615
	2	1-3-5-5	2.0'-4.0'			3.0	
					BR.FINE-CRS.SAND, TRACE SILT & GRAVEL		
	3	3-5-6-6	4.0'-6.0'				
5							610
10	4	2-2-2	10.0'-11.5'		GREY/BR.FINE-MED.SAND, LITTLE SILT, TRACE GRAVEL	10.0	
							605
15	5	2-1-2	15.0'-16.5'				
							600
20	6	2-2-2	20.0'-21.5'				
							595
25	7	5-8-8	25.0'-26.5'				
					BOTTOM OF BORING @ 26.5'	26.5	590
30							585
35							

LEGEND: COL. A:
SAMPLE TYPE: D=DRY A=AUGER C=CORE U=UNDISTURBED PISTON S=SPLIT SPOON
PROPORTIONS USED: TRACE=0-10% LITTLE=10-20% SOME=20-35% AND=35-50%

DRILLER: K. CHRISTIANA
INSPECTOR:

SHEET 1 OF 1 HOLE NO. **B-10**

CLARENCE WELTI ASSOC., INC.
P.O. BOX 397
GLASTONBURY, CONN 06033

CLIENT
MANSFIELD HOUSING AUTHORITY

PROJECT NAME
PROPOSED HOUSING

LOCATION
113-121 SOUTH EAGLEVILLE ROAD, MANSFIELD, CT

	AUGER	CASING	SAMPLER	CORE BAR.
TYPE	HSA		SS	
SIZE I.D.	3.75"		1.375"	
HAMMER WT.			140lbs	
HAMMER FALL			30"	

OFFSET
LINE & STA.
N. COORDINATE
E. COORDINATE

SURFACE ELEV. 613.7
HOLE NO. **B-11**

GROUND WATER OBSERVATIONS
AT 3.5 FT. AFTER 0 HOURS
AT FT. AFTER HOURS

START DATE 9/26/19
FINISH DATE 9/26/19

DEPTH	SAMPLE NO.	BLOWS/6"	DEPTH	A	STRATUM DESCRIPTION + REMARKS		ELEV.
0	1	1-2-4-5	0.0'-2.0'		TOPSOIL	0.56	
					LIGHT BR.FINE-CRS.SAND, TRACE TO LITTLE SILT		
	2	5-5-6-4	2.0'-4.0'				
					BR.FINE-CRS.SAND, TRACE SILT	3.5	610
	3	3-4-5-4	4.0'-6.0'				
5							
						9.0	605
					GREY/BR. FINE-CRS.SAND, SOME SILT, LITTLE GRAVEL, EW COBBLES		
10	4	24-32-60	10.0'-11.3'				
						14.0	600
					BOTTOM OF BORING @ 14.0' (AUGER REFUSAL)		
15							
							595
20							
							590
25							
							585
30							
							580
35							

LEGEND: COL. A:
SAMPLE TYPE: D=DRY A=AUGER C=CORE U=UNDISTURBED PISTON S=SPLIT SPOON
PROPORTIONS USED: TRACE=0-10% LITTLE=10-20% SOME=20-35% AND=35-50%

DRILLER: K. CHRISTIANA
INSPECTOR:

SHEET 1 OF 1 HOLE NO. **B-11**

CLARENCE WELTI ASSOC., INC. P.O. BOX 397 GLASTONBURY, CONN 06033	CLIENT MANSFIELD HOUSING AUTHORITY	PROJECT NAME PROPOSED HOUSING LOCATION 113-121 SOUTH EAGLEVILLE ROAD, MANSFIELD, CT

	AUGER	CASING	SAMPLER	CORE BAR.
TYPE	HSA		SS	
SIZE I.D.	3.75"		1.375"	
HAMMER WT.			140lbs	
HAMMER FALL			30"	

OFFSET
LINE & STA.
N. COORDINATE
E. COORDINATE

SURFACE ELEV. 612.8 | HOLE NO. **B-12**

GROUND WATER OBSERVATIONS
AT 2.0 FT. AFTER 0 HOURS
AT FT. AFTER HOURS

START DATE 9/26/19
FINISH DATE 9/26/19

DEPTH	SAMPLE NO.	BLOWS/6"	DEPTH	A	STRATUM DESCRIPTION + REMARKS	ELEV.
0	1	1-3-6-5	0.0'-2.0'		TOPSOIL 0.50	
					GREY/BR.FINE-MED.SAND, TRACE TO LITTLE SILT	
	2	4-6-5-5	2.0'-4.0'			610
	3	3-3-5-5	4.0'-6.0'			
5						
						605
10					10.0	
	4	8-9-15	10.0'-11.5'		GREY FINE-MED.SAND, SOME SILT & GRAVEL	
						600
15	5	7-12-13	15.0'-16.5'			
						595
20					20.0	
					BOTTOM OF BORING @ 20.0' (AUGER REFUSAL)	
						590
25						
						585
30						
						580
35						

LEGEND: COL. A:
SAMPLE TYPE: D=DRY A=AUGER C=CORE U=UNDISTURBED PISTON S=SPLIT SPOON
PROPORTIONS USED: TRACE=0-10% LITTLE=10-20% SOME=20-35% AND=35-50%

DRILLER: K. CHRISTIANA
INSPECTOR:

SHEET 1 OF 1 | HOLE NO. **B-12**

Particle Size Distribution Report

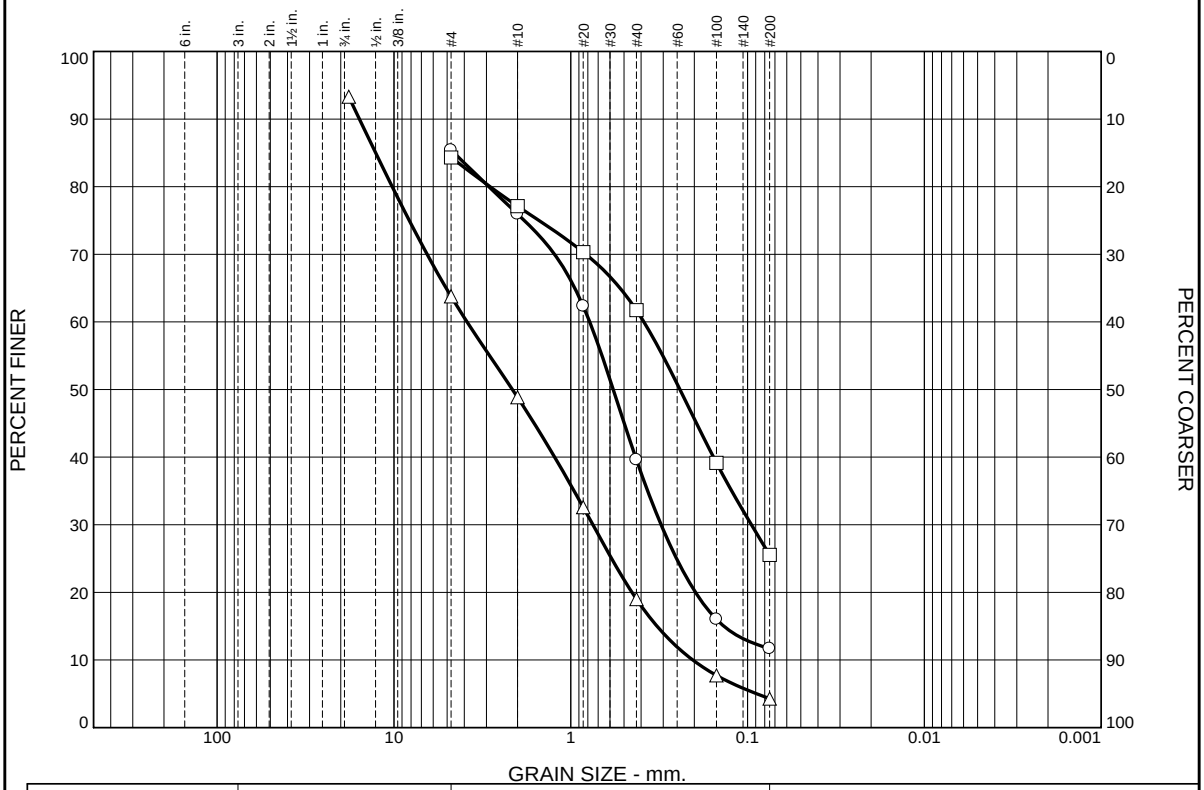

	% +3"	% Gravel		% Sand			% Fines	
		Coarse	Fine	Coarse	Medium	Fine	Silt	Clay
○				9.4	36.4	27.9	11.7	
□				7.2	15.4	36.2	25.5	
△				14.9	29.9	14.7	4.3	

	LL	PL	D_{85}	D_{60}	D_{50}	D_{30}	D_{15}	D_{10}	C_c	C_u
○			4.5758	0.7815	0.5748	0.3083	0.1364			
□				0.3857	0.2412	0.0952				
△			12.6836	3.8573	2.1377	0.7497	0.3251	0.2043	0.71	18.88

	Material Description	USCS	AASHTO
○			
□			
△			

Project No. **Client:** MANSFIELD HOUSING AUTHORITY

Project: PROPOSED HOUSING

○ **Source of Sample:** B-1 **Depth:** 0.50

□ **Source of Sample:** B-3 **Depth:** 2.0 **Sample Number:** 2

△ **Source of Sample:** B-5 **Depth:** 2.0 **Sample Number:** 2

Remarks:

○water content = 7.5%

□water content = 11.3%

△water content = 3.0%

CLARENCE WELTI ASSOCIATES, INC.

Figure

Particle Size Distribution Report

	% +3"	% Gravel		% Sand			% Fines	
		Coarse	Fine	Coarse	Medium	Fine	Silt	Clay
○				2.3	11.9	76.3	6.1	
□						36.2	62.5	
△				4.3	28.9	51.7	13.0	

	LL	PL	D_{85}	D_{60}	D_{50}	D_{30}	D_{15}	D_{10}	C_c	C_u
○			0.4646	0.2695	0.2286	0.1612	0.1090	0.0895	1.08	3.01
□			0.1301							
△			0.8513	0.3790	0.3026	0.1900	0.0968			

	Material Description	USCS	AASHTO
○			
□			
△			

Project No. **Client:** MANSFIELD HOUSING AUTHORITY

Project: PROPOSED HOUSING

○ **Source of Sample:** B-6 **Depth:** 2.0 **Sample Number:** 2

□ **Source of Sample:** B-8 **Depth:** 4.5

△ **Source of Sample:** B-10 **Depth:** 0.56

Remarks:

○water content = 8.5%

□water content = 25.6%

△water content = 11.9%

CLARENCE WELTI ASSOCIATES, INC.

Figure

Site Plan Review

Engineers
Designers
Consultants
Planners
Scientists

December 23, 2019

Mansfield Inland Wetlands Commission
C/O Jennifer Kaufman, Senior Planner & Inland Wetlands Agent
Audrey P. Beck Municipal Building
4 South Eagleville Road
Storrs Mansfield, CT 06268
Via email: kaufmanjs@mansfieldct.org

RE: **Eagleville Green, 113-121 South Eagleville Road**

Commission Members,

As requested, CME Associates, Inc. (CME) reviewed the following materials for the proposed house development on South Eagleville Road:

Item 1 Thirty-eight (38) sheet site plan "Eagleville Green, 113-121 South Eagleville Road, Mansfield, Connecticut" prepared by BSC Group, dated November 25, 2019

Item 2 Stormwater Management Report, Eagleville Green, prepared by BSC Group, dated October 2019, Revised November 2019

Item 3 Wetland Characterization of Wetland System adjacent to Proposed South Eagleville Road Housing Project, prepared by Melissa Kalpan, PWS, BSC Group, dated September 13, 2019

Based on a review of these materials and a site walk on December 12, 2019, we offer the following review comments based upon the Mansfield Wetlands Regulations and other applicable standards. This type of development (8-30g) provides relief from most local zoning regulations, therefore the majority of CME's review focused on items that may present health and safety risks and prevention of drainage and utility issues that have the potential to impact the wetland system:

1. There are two drainage areas: one to the grassed area to the southwest and one to the eastern on-site wetlands. Due to the difference in times of concentration flow paths, peak flows for the two design points should be considered separately. In the provided calculations, peak flows for the two design points are combined to show an overall decrease; however, under the current design, peak flows will be increased to the eastern wetland system.

2. The submitted geotechnical report cites a possible high groundwater table at elevation 612 to 613 based on soil borings and wetland elevation observations. The Connecticut Stormwater Quality Manual (SQM) requires test pits to determine an accurate high groundwater elevation for use in stormwater management design. Test pits must be completed pursuant to the SQM for this site and the design must be revised accordingly including required separation from groundwater for each stormwater management system.

3. Drawdown calculations must be provided for each of the four detention systems (1 basin and 3 underground systems). CME recommends verifying the soil type through test pits and utilizing USDA soil types and the associated Rawl's Rate to determine infiltration rates. Percolation tests provided to verify drawdown were not performed at the bottom elevations of the proposed systems, additionally, pursuant to the SQM, percolation testing cannot be used in place of infiltration testing.

4. The Stormwater Management Report indicates that the detention basin is designed as a dry basin; however, the outlet is set 1.5-feet above the bottom of the basin. Without drawdown calculations to confirm that the basin will drain in less than 24 hours (pursuant to the SQM), the starting water surface elevation must be set at the outlet elevation in the drainage calculation for detention storage. If the basin does not drain, this storage will not be available for detention and the detention will be overestimated.

5. A detail for the two vegetated outlets must be provided and velocity calculations must be provided to verify the outlets will remain stable. If the outlets are not stable erosion may occur and sediment may enter the wetland system.

6. Provide a sediment barrier at the bottom elevation of the proposed stormwater quality basin immediately after grading to protect the basin from contamination with fine particles. The barrier must be maintained until the basin slopes are

stabilized. If fine sediment eroded during construction enters the bottom of the basin, it will clog the soil pores and infiltration capacity will be significantly reduced.

7. Pursuant to the Mansfield Zoning Regulations, the stormwater management design must reduce the peak runoff from the 2-year storm event to fifty percent of the pre-development conditions as well as provide zero increase in peak runoff for the 10-, 25-, and 100- year storm events. The SQM requires a reduction in the 2-year peak runoff to prevent downstream channel degradation. The design engineer must evaluate the downstream watercourse(s) to determine if the 2-year storm reduction is required.

8. CME recommends that the stormwater operation and management plan be added to the plan set. This keeps the operation and management plan with the plan set and ensures that the Town and the contractor are aware of stormwater maintenance needs.

9. Upon review at the field site visitation, the majority of the inland wetland delineation appears correct; however, upon close inspection of an area to the south-central portion of the property, along the rear property line, an area had a large amount of standing water at the surface with obligate wetland species identifiable. The wetland delineation was performed by Ian Cole in June of 2016. The existing flags in the field were re-staked by a land surveyor based on previous surveyed locations. This area may be an inland wetland based on subsurface soil characteristics of a wetland and the standing water at the surface. Note that the ground was not frozen, though there was an ice layer on the standing water. The soil scientist should review this area to determine if it is in fact a wetland and delineate the its limits accordingly.

10. The report by Ms. Kaplan indicates that the wetlands on the site are established by surface runoff; however, there is a major groundwater component that exists. While there is some surface discharge into this wetland, it appears that groundwater is the primary source of water in this wetland given its size and height of some of the tussock sedges. The report does not address or classify the inland wetland soil and upland soil types on the site. Furthermore, the report does not evaluate the functions and values of the existing wetlands. This could have been done using the rationales of a standardized evaluation method (e.g. the US Army Corps of Engineers' Descriptive Approach 1995) and using her best professional judgment. These functions include: ground water recharge, flood flow alteration, sediment

/shoreline stabilization, sediment/pathogen retention, nutrient removal, production export, aquatic habitat, endangered species habitat, visual quality/aesthetics, educational/scientific value, recreation- passive or active and uniqueness/historical.

11. The stormwater basin is designed as a dry basin with many proposed plantings in the basin bottom. Due to the already existing high groundwater at the surface towards the rear property line, it may be appropriate to design the basins as wet basins and adjust the plantings accordingly.

12. We generally agree with Ms. Kaplan's evaluation of the potential effects on the wetlands from the proposed development. In addition to the evaluation, below are additional suggestions to enhance and protect the wetland system:

    a. Use native plantings for the trees, shrubs and groundcover in the landscape design.

    b. No use of fertilizers, pesticides and/or herbicides in close proximity of the wetlands.

    c. That placards on fence posts be placed along the existing wetland that acknowledges the wetland resource and that no dumping of any type is allowed, including brush and leaves and other types of debris.

13. In conclusion, based on the proposed activities and the physical characteristics of the site we do not expect that there will be a significant adverse effect to the inland wetlands and watercourses on or off the site from the development.

Please contact us if you have any questions on the above comments.

Sincerely,

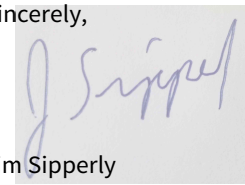

Jim Sipperly
Soil Scientist

Chuck Eaton, PE, LEED-AP
Civil Engineering Manager

u:\muni_ct\mansfield\application reviews\mansfield-green-hud-s.eagleville\2019-12-23_wets-review-letter.docx

BSC GROUP
Transportation • Energy • Land Development

300 Winding Brook Drive
Glastonbury, CT 06033

Tel: 860-652-8227
800-288-8123

www.bscgroup.com

February 12, 2020

Kathleen A. Dorgan, FAIA, LEED-AP
Principal
Dorgan Architecture & Planning
10 Eastwood Road
Storrs, CT 06268

RE: Eagleville Green, 113-121 South Eagleville Road
Response to CME Review Comments

Dear Kathy:

Below are our responses to the comments prepared by CME on the site plan application documents.

Site Plan Review Comments to Planning & Zoning Commission
Dated December 23, 2019; Prepared by CME

1. There are two drainage areas: one to the grassed area to the southwest and one to the eastern on-site wetlands. Due to the difference in times of concentration flow paths, peak flows for the two design points should be considered separately. In the provided calculations, peak flows for the two design points are combined to show an overall decrease; however, under the current design, peak flows will be increased to the eastern wetland system.

   Response: The two drainage areas connect and both discharge to the wetlands located on the eastern half of the site. BSC feels it is appropriate to combine the drainage areas using the wetlands as a single design point.

2. The submitted geotechnical report cites a possible high groundwater table at elevation 612 to 613 based on soil borings and wetland elevation observations. The Connecticut Stormwater Quality Manual (SQM) requires test pits to determine an accurate high groundwater elevation for use in stormwater management design. Test pits must be completed pursuant to the SQM for this site and the design must be revised accordingly including required separation from groundwater for each stormwater management system.

   Response: Test pits were performed on February 8, 2020 at the locations of each of the detention systems. Based on the observed soil conditions, the elevations of the detention basins were adjusted. The test pit information and the boring information are shown on the plans.. See information provided on Sheet C-4.0

3. Drawdown calculations must be provided for each of the four detention systems (1 basin and 3 underground systems). CME recommends verifying the soil type through test pits and utilizing USDA soil types and the associated Rawl's Rate to determine

Engineers
Environmental Scientists
Custom Software Developers
Landscape Architects
Planners
Surveyors

infiltration rates. Percolation tests provided to verify drawdown were not performed at the bottom elevations of the proposed systems, additionally, pursuant to the SQM, percolation testing cannot be used in place of infiltration testing.

Response: Drawdown calculations are provided for each system. See revised Stormwater Management Report.

4. The Stormwater Management Report indicates that the detention basin is designed as a dry basin; however, the outlet is set 1.5-feet above the bottom of the basin. Without drawdown calculations to confirm that the basin will drain in less than 24 hours (pursuant to the SQM), the starting water surface elevation must be set at the outlet elevation in the drainage calculation for detention storage. If the basin does not drain, this storage will not be available for detention and the detention will be overestimated.

   Response: Drawdown calculations are provided. See revised Stormwater Management Report.

5. The outlet elevation of the detention basin is noted as 614.5 on the site plans, this must be properly modeled in the HydroCAD calculations.

   Response: The outlet control structure for the basin has an invert of 614.05. The pipe from the basin to the outlet control structure #1 is considered storage.

6. The outlet control structure table on Sheet C-6.1 indicates a 15-inch diameter for Orifice B in Outlet Control Structure #1. It appears this information is for the overflow invert. The Design Engineer must review and revise the table as necessary.

   Response: Table has been revised accordingly.

7. A detail for the two vegetated outlets must be provided and velocity calculations should be provided to verify the outlets will remain stable. If the outlets are not stable erosion may occur and sediment may enter the wetland system.

   Response: Outlet velocities are low (approximately 4 fps) and should not have an issue with the outlet protection being stable. Erosion control matting is called for to stabilize the ground until the vegetation can be fully established.

8. Additional details including maintenance manholes must be shown on the plans for the three underground detention systems. High level overflow grates for Systems 2P and 3P must be provided on the plans and details. If these details are not shown, the system may not be constructed correctly and function as designed.

   Response: Maintenance manholes have been shown and will be constructed in accordance with the approved shop drawing from the manufacturer.

9. The design engineer must provide a detail of Detention System 2P (36-inch corrugated metal pipe) to verify the drainage calculations and ensure the system is properly constructed. Additionally, CME recommends that plastic pipe be utilized in the detention system to avoid salt corrosion damage. The plastic pipe will have a

considerably longer service life than metal pipe.

Response: Corrugated Metal Pipe has been switched to HDPE pipe. A detail of the pipe bedding has been included. See sheet C-6.1.

10. The design engineer must review and revise the plans and calculations for the bottom elevation of Detention System 2P. The plans indicate a bottom elevation of 611.75 and the report includes a bottom stone elevation of 611.25. The system detail states a minimum 9-inches of stone below the system.

    Response: Detention System 2P is the 36-inch HDPE pipe storage, which has a 6" stone bedding. See detail provided in previous response.

11. The Pre- and Post-Development Comparison table in the Stormwater Management Report contains addition errors in the Total Site rows, Proposed conditions column. The design engineer must review and revise as required.

    Response: The Total Site rows are not strictly additive between the two discharge areas due to their different time of concentrations. The two hydrographs were combined to create the total site flow.

12. The Design Engineer must review and revise the invert elevations for the drainage manhole downstream of Outlet Control Structure #1. It appears too many inverts are listed for this structure and the pipe to the vegetated outlet is sloped in reverse.

    Response: Outlet invert has been revised. Overflow from System 3P enters this manhole.

13. Any proposed free-standing signs must be included on the site plans to ensure there are no sight line conflicts from the driveways.

    Response: Signage is not currently proposed for this site. If considered in the future, it will be located to ensure there are no sight line conflicts from the driveways.

14. Provide a sediment barrier at the bottom elevation of the proposed stormwater quality basin immediately after grading to protect the basin from contamination with fine particles. The barrier must be maintained until the basin slopes are stabilized. If fine sediment eroded during construction enters the bottom of the basin, it will clog the soil pores and infiltration capacity will be significantly reduced.

    Response: Silt fence has been added to the bottom of slopes leading into the basin. It is also required for the contractor to remove any collected sediment from the basin.

15. The gas line on the abutting parcel(s) should be included on the site plans to ensure that no conflicts with proposed infrastructure exist.

    Response: Survey of the abutting parcels is not required. Gas line easement is not located near the improvements with the drainage easement.

16. The proposed landscaping plan may limit location options for stockpiling snow.

Snow stockpile location(s) should be shown on the site plans.

Response: Snow stockpile areas will be identified.

17. The Sewer Design Notes on Sheet G-1.0 reference 42 bedrooms in the calculations for pump chamber sizing; however, it appears the development will have 73 bedrooms. The design engineer must review and revise this calculation must be updated.

    Response: Calculations have been updated for the additional bedrooms. See Sheet G-1.0.

18. Pursuant to the Mansfield Zoning Regulations, the stormwater management design must reduce the peak runoff from the 2-year storm event to fifty percent of the pre-development conditions as well as provide zero increase in peak runoff for the 10-, 25-, and 100- year storm events. The SQM requires a reduction in the 2-year peak runoff to prevent downstream channel degradation. The design engineer must evaluate the downstream watercourse to determine if the 2-year storm reduction is required.

    Response: Stormwater management design has been modified to include a 50% reduction on the 2-year storm event over pre-construction conditions.

19. The proposed pump station must meet the Separation Distances for stormwater pipes & structures outlined by Table 1 of the CT Public Health Code. Watertight pipe can be utilized to reduce these separation distances however, the code does not allow groundwater to be collected in the stormwater system. The proposed perforated pipes are subject to larger separation distances from the pump station

    Response: The separation between the pump station tank and the proposed detention system and catch basins meet separation distance requirements of 25 feet and 10 feet respectively.

20. CME recommends that the stormwater operation and management plan be added to the plan set. This keeps the operation and management plan with the plan set and ensures that the Town and the contractor are aware of stormwater management needs.

    Response: The Operation and management plan listed in the stormwater report has been placed on the plans as well. See Sheet G-1.0.

CME offers the following comments on the Affordability Plan:

21. The Affordability Plan appears to be largely in order. There several items of clarification that the Commission may wish to consider prior to final approval of this document:

    a. The annual status report of the Affordability Plan is submitted, per Section III, to "the Town" by January 31 to show the prior year's activity. The Commission should clarify the specific entity at the Town to whom this report should be directed.

Response: See separate response for Affordability Plan by Kathleen Dorgan.

b. In the Tenant Selection Process section VII.C.(a).1., a reference is made to a waiting list lottery created using the Administrator's "housing software program". The Commission should verify that the proposed Administrator – in this case, the Mansfield Housing Authority – is in possession of such software.

Response: See separate response for Affordability Plan by Kathleen Dorgan.

c. In the Tenant Selection Process section VII.C.(b).4.(iii).A, the background report for tenant applications must show that "No Applicant has a felony conviction within the last five (5) years for drug-related or violent criminal activity". In the case of drug-related convictions, particularly for non-violent crimes, the national standards appear to be changing, with recent state and federal level commutation of sentences reflecting a recalibration of the severity of non-violent drug-crime penalties. The Commission may wish to reconsider this automatic disqualification standard.

Response: See separate response for Affordability Plan by Kathleen Dorgan.

Site Plan Review Comments to Inland Wetlands Commission
Dated December 23, 2019; Prepared by CME

1. There are two drainage areas: one to the grassed area to the southwest and one to the eastern on-site wetlands. Due to the difference in times of concentration flow paths, peak flows for the two design points should be considered separately. In the provided calculations, peak flows for the two design points are combined to show an overall decrease; however, under the current design, peak flows will be increased to the eastern wetland system.

   Response: See response to Item 1 (Planning & Zoning Comments)

2. The submitted geotechnical report cites a possible high groundwater table at elevation 612 to 613 based on soil borings and wetland elevation observations. The Connecticut Stormwater Quality Manual (SQM) requires test pits to determine an accurate high groundwater elevation for use in stormwater management design. Test pits must be completed pursuant to the SQM for this site and the design must be revised accordingly including required separation from groundwater for each stormwater management system.

   Response: See response to Item 2 (Planning & Zoning Comments)

3. Drawdown calculations must be provided for each of the four detention systems (1 basin and 3 underground systems). CME recommends verifying the soil type through test pits and utilizing USDA soil types and the associated Rawl's Rate to determine infiltration rates. Percolation tests provided to verify drawdown were not performed at the bottom elevations of the proposed systems, additionally, pursuant to the SQM,

percolation testing cannot be used in place of infiltration testing.

Response: See response to Item 3 (Planning & Zoning Comments)

4. The Stormwater Management Report indicates that the detention basin is designed as a dry basin; however, the outlet is set 1.5-feet above the bottom of the basin. Without drawdown calculations to confirm that the basin will drain in less than 24 hours (pursuant to the SQM), the starting water surface elevation must be set at the outlet elevation in the drainage calculation for detention storage. If the basin does not drain, this storage will not be available for detention and the detention will be overestimated.

   Response: See response to Item 4 (Planning & Zoning Comments)

5. A detail for the two vegetated outlets must be provided and velocity calculations must be provided to verify the outlets will remain stable. If the outlets are not stable erosion may occur and sediment may enter the wetland system.

   Response: See response to Item 7 (Planning & Zoning Comments)

6. Provide a sediment barrier at the bottom elevation of the proposed stormwater quality basin immediately after grading to protect the basin from contamination with fine particles. The barrier must be maintained until the basin slopes are stabilized. If ine sediment eroded during construction enters the bottom of the basin, it will clog the soil pores and infiltration capacity will be significantly reduced.

   Response: See response to Item 14 (Planning & Zoning Comments)

7. Pursuant to the Mansfield Zoning Regulations, the stormwater management design must reduce the peak runoff from the 2-year storm event to fifty percent of the pre-development conditions as well as provide zero increase in peak runoff for the 10-, 25-, and 100- year storm events. The SQM requires a reduction in the 2-year peak runoff to prevent downstream channel degradation. The design engineer must evaluate the downstream watercourse(s) to determine if the 2-year storm reduction is required.

   Response: See response to Item 18 (Planning & Zoning Comments)

8. CME recommends that the stormwater operation and management plan be added to the plan set. This keeps the operation and management plan with the plan set and ensures that the Town and the contractor are aware of stormwater maintenance needs.

   Response: See response to Item 20 (Planning & Zoning Comments)

9. Upon review at the field site visitation, the majority of the inland wetland delineation appears correct; however, upon close inspection of an area to the south-central portion of the property, along the rear property line, an area had a large amount of standing water at the surface with obligate wetland species identifiable. The wetland delineation was performed by Ian Cole in June of 2016. The existing flags in the field were re-staked by a land surveyor based on previous surveyed locations. This area

may be an inland wetland based on subsurface soil characteristics of a wetland and the standing water at the surface. Note that the ground was not frozen, though there was an ice layer on the standing water. The soil scientist should review this area to determine if it is in fact a wetland and delineate the its limits accordingly.

Response: See attached correspondence from Ian Cole (Mansfield Housing Authority- Wetlands Delineation Review) dated January 3, 2020 and Ian Cole resume 12-9-19.pdf.

10. The report by Ms. Kaplan indicates that the wetlands on the site are established by surface runoff; however, there is a major groundwater component that exists. While there is some surface discharge into this wetland, it appears that groundwater is the primary source of water in this wetland given its size and height of some of the tussock sedges. The report does not address or classify the inland wetland soil and upland soil types on the site. Furthermore, the report does not evaluate the functions and values of the existing wetlands. This could have been done using the rationales of a standardized evaluation method (e.g. the US Army Corps of Engineers' escriptive Approach 1995) and using her best professional judgment. These functions include: ground water recharge, flood flow alteration, sediment/shoreline stabilization, sediment/pathogen retention, nutrient removal, production export, aquatic habitat, endangered species habitat, visual quality/aesthetics, educational/scientific value, recreation- passive or active and uniqueness/historical.

    Response: Ms. Kaplan was not responsible for the wetland delineation, soil characterization. Ms. Kaplan's report was to identify the health and quality of the wetland and the potential impact this proposed project would have on this natural resource. The Soil Scientist will provide the soil evaluation and characterization.

11. The stormwater basin is designed as a dry basin with many proposed plantings in the basin bottom. Due to the already existing high groundwater at the surface towards the rear property line, it may be appropriate to design the basins as wet basins and adjust the plantings accordingly.

    Response: The dry basin is approximately 2 feet above groundwater as identified in nearby borings. It is not expected to be a wet basin.

12. We generally agree with Ms. Kaplan's evaluation of the potential effects on the wetlands from the proposed development. In addition to the evaluation, below are additional suggestions to enhance and protect the wetland system:
    a. Use native plantings for the trees, shrubs and groundcover in the landscape design.
    b. No use of fertilizers, pesticides and/or herbicides in close proximity of the wetlands.
    c. That placards on fence posts be placed along the existing wetland that acknowledges the wetland resource and that no dumping of any type is allowed, including brush and leaves and other types of debris.

    Response: a. Only native and adaptively native plants have been called for on the plans. We are reviewing the recommendations provided for alternate plantings and will respond at a future time. b. Agreed c. Placards will be considered if funding is

available.

13. In conclusion, based on the proposed activities and the physical characteristics of the site we do not expect that there will be a significant adverse effect to the inland wetlands and watercourses on or off the site from the development.

    Response: Agreed

Very truly yours,

BSC Group-Connecticut, Inc.

Robert S, Newton, PE, LEED AP

Site Plan Review

Engineers
Designers
Consultants
Planners
Scientists

February 19, 2020

Mansfield Inland Wetlands Agency
C/O Jennifer Kaufman, Senior Planner & Inland Wetlands Agent
Audrey P. Beck Municipal Building
4 South Eagleville Road
Storrs Mansfield, CT 06268
Via email: kaufmanjs@mansfieldct.org

RE: **Eagleville Green, 113-121 South Eagleville Road**

Agency Members,

As requested, CME Associates, Inc. (CME) reviewed the following revised materials submitted for the proposed house development on South Eagleville Road:

Item 1 Twenty-five (25) sheet site plan "Eagleville Green, 113-121 South Eagleville Road, Mansfield, Connecticut" prepared by BSC Group, dated November 25, 2019, revised February 12, 2020

Item 2 Stormwater Management Report, Eagleville Green, prepared by BSC Group, dated October 2019, revised February 2020

Item 3 Wetland Delineation Review emailed from Ian Cole, dated January 3, 2020

Item 4 Letter, "RE: Eagleville Green, 113-121 South Eagleville Road, Response to CME Review Comments", prepared by BSC Group, addressed to Kathleen Dorgan, Dorgan Architecture & Planning, dated February 12, 2020

CME's December 23, 2019 comments below are in normal text. Updates to these comments, based on the revised application materials submitted, are in *italic text*. All new comments are in **bold text**.

1. There are two drainage areas: one to the grassed area to the southwest and one to the eastern on-site wetlands. Due to the difference in times of concentration flow paths, peak flows for the two design points should be considered separately. In the provided calculations, peak flows for the two design points are combined to show an overall decrease; however, under the current design, peak flows will be increased to the eastern wetland system.
   The stormwater management design has been modified and peak flows will not be increased to the wetland system.

2. The submitted geotechnical report cites a possible high groundwater table at elevation 612 to 613 based on soil borings and wetland elevation observations. The Connecticut Stormwater Quality Manual (SQM) requires test pits to determine an accurate high groundwater elevation for use in stormwater management design. Test pits must be completed pursuant to the SQM for this site and the design must be revised accordingly including required separation from groundwater for each stormwater management system.
   Test pits were conducted at the proposed stormwater system locations and are recorded on the revised site plans. The stormwater management system has been modified according to the test pit results. The high groundwater elevation is within 2-feet of the bottom of stone for each of the three underground detention systems.

   With the outlet of the three detention systems set above the bottom of stone elevation, the designer is relying on infiltration to ensure the detention systems drain completely between each storm. If the systems do not drain completely, then the storage volume necessary to attenuate peak flows will not be available for a subsequent storm. A mounding analysis to demonstrate that the provided separation is adequate could replace the need to satisfy the SQM requirement of 3-feet of separation. Alternatively, the system could be raised to meet the groundwater separation and widened to maintain the required volume. Enlarging the footprint of the systems will also help decrease the drawdown time (See Comment 3.)

3. Drawdown calculations must be provided for each of the four detention systems (1 basin and 3 underground systems). CME recommends verifying the soil type through test pits and utilizing USDA soil types and the associated Rawl's Rate to determine infiltration rates. Percolation tests provided to verify drawdown were not performed at the bottom elevations of the proposed systems, additionally,

pursuant to the SQM, percolation testing cannot be used in place of infiltration testing.

Drawdown calculations are provided in the revised Stormwater Management Report. The detention basin is expected to drain in 15.3 hours. Systems 2P, 3P and 4P are calculated to drain in 65.3, 70.6, and 56.8 hours, respectively. The SQM indicates underground detention facilities are typically designed to provide less than 24 hours of detention time in order to have the storage available for a subsequent storm. The Design Engineer must modify the design to ensure that these three detention systems will completely drain between storms (See Comment 2.)

4. The Stormwater Management Report indicates that the detention basin is designed as a dry basin; however, the outlet is set 1.5-feet above the bottom of the basin. Without drawdown calculations to confirm that the basin will drain in less than 24 hours (pursuant to the SQM), the starting water surface elevation must be set at the outlet elevation in the drainage calculation for detention storage. If the basin does not drain, this storage will not be available for detention and the detention will be overestimated.

   Drawdown calculations are provided in the revised Stormwater Management Report and demonstrate that the basin will drain within 24 hours. In addition, adequate separation from groundwater has been demonstrated by test pits to ensure the basin will not remain full of water. The basin should function for detention as designed. The Operation and Maintenance Plan After Construction must be revised to include inspections of the detention basin to ensure it is draining in less than 24-hours after a storm event.

5. A detail for the two vegetated outlets must be provided and velocity calculations must be provided to verify the outlets will remain stable. If the outlets are not stable erosion may occur and sediment may enter the wetland system.

   The revised application materials indicate the outlet velocities are less than 4 feet-per-second and the outlets will remain stable with the proposed temporary matting and landscaping.

6. Provide a sediment barrier at the bottom elevation of the proposed stormwater quality basin immediately after grading to protect the basin from contamination with fine particles. The barrier must be maintained until the basin slopes are stabilized. If fine sediment eroded during construction enters the bottom of the basin, it will clog the soil pores and infiltration capacity will be significantly reduced.

Sediment barrier has been added mid-way up the basin slopes in the revised site plans, sheet C-1.0. CME recommends locating the barrier at the bottom of basin (elevation 613). Providing the barrier is superior to mechanical cleanout in protecting any infiltration capacity compromised by eroded fines settling in the bottom of the basin.

7. Pursuant to the Mansfield Zoning Regulations, the stormwater management design must reduce the peak runoff from the 2-year storm event to fifty percent of the pre-development conditions as well as provide zero increase in peak runoff for the 10-, 25-, and 100- year storm events. The SQM requires a reduction in the 2-year peak runoff to prevent downstream channel degradation. The design engineer must evaluate the downstream watercourse(s) to determine if the 2-year storm reduction is required.
   The revised application materials demonstrate the design has satisfied this requirement.

8. CME recommends that the stormwater operation and management plan be added to the plan set. This keeps the operation and management plan with the plan set and ensures that the Town and the contractor are aware of stormwater maintenance needs.
   The stormwater operation and management plan has been included on the revised site plans (Sheet G-1.0.)

9. Upon review at the field site visitation, the majority of the inland wetland delineation appears correct; however, upon close inspection of an area to the south-central portion of the property, along the rear property line, an area had a large amount of standing water at the surface with obligate wetland species identifiable. The wetland delineation was performed by Ian Cole in June of 2016. The existing flags in the field were re-staked by a land surveyor based on previous surveyed locations. This area may be an inland wetland based on subsurface soil characteristics of a wetland and the standing water at the surface. Note that the ground was not frozen, though there was an ice layer on the standing water. The soil scientist should review this area to determine if it is in fact a wetland and delineate the its limits accordingly.
   The applicant's Soil Scientist reviewed the area with standing water and concluded that the area is not a wetland and that the original wetland delineation of the site from 2016 is still valid. We have reviewed the provided report and concur with the conclusion that this area is not an inland wetland and that the grades were previously altered.

10. The report by Ms. Kaplan indicates that the wetlands on the site are established by surface runoff; however, there is a major groundwater component that exists. While there is some surface discharge into this wetland, it appears that groundwater is the primary source of water in this wetland given its size and height of some of the tussock sedges. The report does not address or classify the inland wetland soil and upland soil types on the site. Furthermore, the report does not evaluate the functions and values of the existing wetlands. This could have been done using the rationales of a standardized evaluation method (e.g. the US Army Corps of Engineers' Descriptive Approach 1995) and using her best professional judgment. These functions include: ground water recharge, flood flow alteration, sediment /shoreline stabilization, sediment/pathogen retention, nutrient removal, production export, aquatic habitat, endangered species habitat, visual quality/aesthetics, educational/scientific value, recreation- passive or active and uniqueness/historical.
The applicant's Soil Scientist reviewed the site as documented in response to Comment #9.

11. The stormwater basin is designed as a dry basin with many proposed plantings in the basin bottom. Due to the already existing high groundwater at the surface towards the rear property line, it may be appropriate to design the basins as wet basins and adjust the plantings accordingly.
The recently completed test pits indicate that the bottom of the stormwater basin is well above high ground water; therefore, the proposed plantings will be appropriate.

12. We generally agree with Ms. Kaplan's evaluation of the potential effects on the wetlands from the proposed development. In addition to the evaluation, below are additional suggestions to enhance and protect the wetland system:

    a. Use native plantings for the trees, shrubs and groundcover in the landscape design.
    The applicant indicates that only native or adaptively native plants are included on the landscaping plan.

    b. No use of fertilizers, pesticides and/or herbicides in close proximity of the wetlands.
    The applicant agreed with this statement.

c. That placards on fence posts be placed along the existing wetland that acknowledges the wetland resource and that no dumping of any type is allowed, including brush and leaves and other types of debris.
The applicant indicated that placards will be considered if funding is available.

13. In conclusion, based on the proposed activities and the physical characteristics of the site we do not expect that there will be a significant adverse effect to the inland wetlands and watercourses on or off the site from the development.

Please contact us if you have any questions on the above comments.

Sincerely,

Jim Sipperly
Soil Scientist

Chuck Eaton, PE, LEED-AP
Civil Engineering Manager

u:\muni_ct\mansfield\application reviews\mansfield-green-hud-s.eagleville\reviews\2020-02-19_wets-review-letter.docx

Site Plan Review

Engineers
Designers
Consultants
Planners
Scientists

February 19, 2020

Mansfield Planning & Zoning Commission
C/O Linda Painter, Director of Planning & Development and Jennifer Kaufman, Senior Planner & Inland Wetlands Agent
Audrey P. Beck Municipal Building
4 South Eagleville Road
Storrs Mansfield, CT 06268
Via email: painterlm@mansfieldct.org and kaufmanjs@mansfieldct.org

RE: **Eagleville Green, 113-121 South Eagleville Road**

Commission Members,

As requested, CME Associates, Inc. (CME) have reviewed the following materials for the proposed house development on South Eagleville Road:

Item 1 Twenty-five (25) sheet site plans "Eagleville Green, 113-121 South Eagleville Road, Mansfield, Connecticut" prepared by BSC Group, dated November 25, 2019, revised February 12, 2020

Item 2 Stormwater Management Report, Eagleville Green, prepared by BSC Group, dated October 2019, Revised February 2020

Item 3 Affordability Plan entitled The Mansfield Nonprofit Housing Development Corporation, Eagleville Green, 113-121 South Eagleville Road, Mansfield, Connecticut prepared by Shipman & Goodwin LLP, updated January 2020

Item 4 Letter, "RE: Eagleville Green, 113-121 South Eagleville Road, Response to CME Review Comments", prepared by BSC Group, addressed to Kathleen Dorgan, Dorgan Architecture & Planning, dated February 12, 2020

CME's December 23, 2019 comments below are in normal text. Updates to these comments, based on the revised application materials submitted, are in *italic text*. All new comments are in **bold text**.

1. There are two drainage areas: one to the grassed area to the southwest and one to the eastern on-site wetlands. Due to the difference in times of concentration flow paths, peak flows for the two design points should be considered separately. In the provided calculations, peak flows for the two design points are combined to show an overall decrease; however, under the current design, peak flows will be increased to the eastern wetland system.
   The stormwater management design has been modified and peak flows will not be increased to the wetland system.

2. The submitted geotechnical report cites a possible high groundwater table at elevation 612 to 613 based on soil borings and wetland elevation observations. The Connecticut Stormwater Quality Manual (SQM) requires test pits to determine an accurate high groundwater elevation for use in stormwater management design. Test pits must be completed pursuant to the SQM for this site and the design must be revised accordingly including required separation from groundwater for each stormwater management system.
   Test pits were conducted at the proposed stormwater system locations and are recorded on the revised site plans. The stormwater management system has been modified according to the test pit results. The high groundwater elevation is within 2-feet of the bottom of stone for each of the three underground detention systems.

   With the outlet of the three detention systems set above the bottom of stone elevation, the designer is relying on infiltration to ensure the detention systems drain completely between each storm. If the systems do not drain completely, then the storage volume necessary to attenuate peak flows will not be available for a subsequent storm. A mounding analysis to demonstrate that the provided separation is adequate could replace the need to satisfy the SQM requirement of 3-feet of separation. Alternatively, the system could be raised to meet the groundwater separation and widened to maintain the required volume. Enlarging the footprint of the systems will also help decrease the drawdown time (See Comment 3.)

3. Drawdown calculations must be provided for each of the four detention systems (1 basin and 3 underground systems). CME recommends verifying the soil type

through test pits and utilizing USDA soil types and the associated Rawl's Rate to determine infiltration rates. Percolation tests provided to verify drawdown were not performed at the bottom elevations of the proposed systems, additionally, pursuant to the SQM, percolation testing cannot be used in place of infiltration testing.

Drawdown calculations are provided in the revised Stormwater Management Report. The detention basin is expected to drain in 15.3 hours. Systems 2P, 3P and 4P are calculated to drain in 65.3, 70.6, and 56.8 hours, respectively. The SQM indicates underground detention facilities are typically designed to provide less than 24 hours of detention time in order to have the storage available for a subsequent storm. The Design Engineer must modify the design to ensure that these three detention systems will completely drain between storms (See Comment 2.)

4. The Stormwater Management Report indicates that the detention basin is designed as a dry basin; however, the outlet is set 1.5-feet above the bottom of the basin. Without drawdown calculations to confirm that the basin will drain in less than 24 hours (pursuant to the SQM), the starting water surface elevation must be set at the outlet elevation in the drainage calculation for detention storage. If the basin does not drain, this storage will not be available for detention and the detention will be overestimated.

   Drawdown calculations are provided in the revised Stormwater Management Report and demonstrate that the basin will drain within 24 hours. In addition, adequate separation from groundwater has been demonstrated by test pits to ensure the basin will not remain full of water. The basin should function for detention as designed. The Operation and Maintenance Plan After Construction must be revised to include inspections of the detention basin to ensure it is draining in less than 24-hours after a storm event.

5. The outlet elevation of the detention basin is noted as 614.5 on the site plans, this must be properly modeled in the HydroCAD calculations.

   The applicant's response clarified that the HydroCAD calculations for this outlet are based on Outlet Control Structure No. 1, the modeling appears to be accurate for this.

6. The outlet control structure table on Sheet C-6.1 indicates a 15-inch diameter for Orifice B in Outlet Control Structure #1. It appears this information is for the overflow invert. The Design Engineer must review and revise the table as necessary.

   The revised site plans corrected the Outlet Control Structure table.

7. A detail for the two vegetated outlets must be provided and velocity calculations should be provided to verify the outlets will remain stable. If the outlets are not stable erosion may occur and sediment may enter the wetland system.
The revised application materials indicate the outlet velocities are less than 4 feet-per-second and the outlets will remain stable with the proposed temporary matting and landscaping.

8. Additional details including maintenance manholes must be shown on the plans for the three underground detention systems. High level overflow grates for Systems 2P and 3P must be provided on the plans and details. If these details are not shown, the system may not be constructed correctly and function as designed.
Inspection ports have been included for the detention systems on the revised site plans. The designer connected Detention Systems 3P and 4P to the proposed outlets rather than providing high level overflow grates. The Operation and Maintenance Plan After Construction must be revised to include inspection of the detention systems to ensure they are draining in less than 24-hours after a storm event.

9. The design engineer must provide a detail of Detention System 2P (36-inch corrugated metal pipe) to verify the drainage calculations and ensure the system is properly constructed. Additionally, CME recommends that plastic pipe be utilized in the detention system to avoid salt corrosion damage. The plastic pipe will have a considerably longer service life than metal pipe.
A detail for system 2P has been included on the revised site plans and the proposed pipe material is perforated HDPE.

10. The design engineer must review and revise the plans and calculations for the bottom elevation of Detention System 2P. The plans indicate a bottom elevation of 611.75 and the report includes a bottom stone elevation of 611.25. The system detail states a minimum 9-inches of stone below the system.
The revised site plans clarify the elevations of Detention System 2P, the elevations now match the provided calculations.

11. The Pre- and Post-Development Comparison table in the Stormwater Management Report contains addition errors in the Total Site rows, Proposed conditions column. The design engineer must review and revise as required.
The designer clarified that the rows are not strictly additive due to different times of concentrations.

12. The Design Engineer must review and revise the invert elevations for the drainage manhole downstream of Outlet Control Structure #1. It appears too many inverts are listed for this structure and the pipe to the vegetated outlet is sloped in reverse.
The invert elevations for Outlet Control Structure #1 have been modified in the revised site plans and the outlet pipe is now correctly sloped.

13. Any proposed free-standing signs must be included on the site plans to ensure there are no sight line conflicts from the driveways.
The applicant indicates no signage is proposed for the site.

14. Provide a sediment barrier at the bottom elevation of the proposed stormwater quality basin immediately after grading to protect the basin from contamination with fine particles. The barrier must be maintained until the basin slopes are stabilized. If fine sediment eroded during construction enters the bottom of the basin, it will clog the soil pores and infiltration capacity will be significantly reduced.
Sediment barrier has been added mid-way up the basin slopes in the revised site plans, sheet C-1.0. CME recommends locating the barrier at the bottom of basin (elevation 613). Providing the barrier is superior to mechanical cleanout in protecting any infiltration capacity compromised by eroded fines settling in the bottom of the basin.

15. The gas line on the abutting parcel(s) should be included on the site plans to ensure that no conflicts with proposed infrastructure exist.
The applicant indicates that there are no conflicts between the gas easement and the proposed drainage easement.

16. The proposed landscaping plan may limit location options for stockpiling snow. Snow stockpile location(s) should be shown on the site plans.
The proposed snow stockpile locations included on the revised site plans do not appear to account for proposed landscaping in those areas.

17. The Sewer Design Notes on Sheet G-1.0 reference 42 bedrooms in the calculations for pump chamber sizing; however, it appears the development will have 73 bedrooms. The design engineer must review and revise this calculation must be updated.
The calculation for pump chamber sizing has been revised and the pump chamber size updated on the revised site plans.

18. Pursuant to the Mansfield Zoning Regulations, the stormwater management design must reduce the peak runoff from the 2-year storm event to fifty percent of the pre-development conditions as well as provide zero increase in peak runoff for the 10-, 25-, and 100- year storm events. The SQM requires a reduction in the 2-year peak runoff to prevent downstream channel degradation. The design engineer must evaluate the downstream watercourse to determine if the 2-year storm reduction is required.
The revised application materials demonstrate the design has satisfied this requirement.

19. The proposed pump station must meet the Separation Distances for stormwater pipes & structures outlined by Table 1 of the CT Public Health Code. Watertight pipe can be utilized to reduce these separation distances however, the code does not allow groundwater to be collected in the stormwater system. The proposed perforated pipes are subject to larger separation distances from the pump station.
The proposed pump station has been relocated adjacent to Building #2 in the revised site plans. The majority of the separation distances for stormwater are now met; however, CB-1 must be constructed in a watertight manner with rubber joint seals and watertight pipe connection seals. The Design Engineer must provide a call-out on the plan for this requirement.

20. CME recommends that the stormwater operation and management plan be added to the plan set. This keeps the operation and management plan with the plan set and ensures that the Town and the contractor are aware of stormwater management needs.
The stormwater operation and management plan has been included on the revised site plans (Sheet G-1.0.)

21. **The Plan revisions satisfied the comments made by CME (December 23, 2019) and Linda Painter as to the details of the Affordability Plan, but we remind the Commission that, when ultimately acting upon the application, it should include provisions in the terms of approval noting:**
    a. **The specific entity at the Town to whom the annual report is to be submitted.**
    b. **The Mansfield Housing Authority should be in possession of the "housing software program" as cited by the Plan.**

Please contact us if you have any questions on the above comments.

Sincerely,

Chuck Eaton, PE, LEED-AP
Civil Engineering Manager

John Guszkowski, AICP
Lead Planner

u:\muni_ct\mansfield\application reviews\mansfield-green-hud-s.eagleville\reviews\2020-02-19_pzc-review-letter.docx

BSC GROUP
Transportation ▪ Energy ▪ Land Development

300 Winding Brook Drive
Glastonbury, CT 06033

Tel: 860-652-8227
800-288-8123

www.bscgroup.com

January 15, 2020

Kathleen A. Dorgan, FAIA, LEED-AP
Principal
Dorgan Architecture & Planning
10 Eastwood Road
Storrs, CT 06268

RE: Eagleville Green, 113-121 South Eagleville Road
Response to CME Review Comments

Dear Kathy:

Below are our responses to the comments prepared by CME on the site plan application documents.

Site Plan Review Comments to Planning & Zoning Commission
Dated December 23, 2019; Prepared by CME

1. There are two drainage areas: one to the grassed area to the southwest and one to the eastern on-site wetlands. Due to the difference in times of concentration flow paths, peak flows for the two design points should be considered separately. In the provided calculations, peak flows for the two design points are combined to show an overall decrease; however, under the current design, peak flows will be increased to the eastern wetland system.

   Response: The two drainage areas connect and both discharge to the wetlands located on the eastern half of the site. BSC feels it is appropriate to combine the drainage areas using the wetlands as a single design point.

2. The submitted geotechnical report cites a possible high groundwater table at elevation 612 to 613 based on soil borings and wetland elevation observations. The Connecticut Stormwater Quality Manual (SQM) requires test pits to determine an accurate high groundwater elevation for use in stormwater management design. Test pits must be completed pursuant to the SQM for this site and the design must be revised accordingly including required separation from groundwater for each stormwater management system.

   Response: Based on the geotechnical report, the highest groundwater elevation that was observed was 612.4 (B-9) which is the furthest from the detention systems. The majority of the other groundwater elevations were observed in the 610+ range. All detention systems will be reviewed to ensure they are sufficiently above the observed groundwater. See information provided on Sheet C-4.0

3. Drawdown calculations must be provided for each of the four detention systems (1 basin and 3 underground systems). CME recommends verifying the soil type through

Engineers
Environmental Scientists
Custom Software Developers
Landscape Architects
Planners
Surveyors

test pits and utilizing USDA soil types and the associated Rawl's Rate to determine infiltration rates. Percolation tests provided to verify drawdown were not performed at the bottom elevations of the proposed systems, additionally, pursuant to the SQM, percolation testing cannot be used in place of infiltration testing.

Response: Drawdown calculations are provided for each system. See revised Stormwater Management Report.

4. The Stormwater Management Report indicates that the detention basin is designed as a dry basin; however, the outlet is set 1.5-feet above the bottom of the basin. Without drawdown calculations to confirm that the basin will drain in less than 24 hours (pursuant to the SQM), the starting water surface elevation must be set at the outlet elevation in the drainage calculation for detention storage. If the basin does not drain, this storage will not be available for detention and the detention will be overestimated.

   Response: Drawdown calculations are provided. See revised Stormwater Management Report.

5. The outlet elevation of the detention basin is noted as 614.5 on the site plans, this must be properly modeled in the HydroCAD calculations.

   Response: The outlet control structure for the basin has an invert of 614.05. The pipe from the basin to the outlet control structure #1 is considered storage.

6. The outlet control structure table on Sheet C-6.1 indicates a 15-inch diameter for Orifice B in Outlet Control Structure #1. It appears this information is for the overflow invert. The Design Engineer must review and revise the table as necessary.

   Response: Table has been revised accordingly.

7. A detail for the two vegetated outlets must be provided and velocity calculations should be provided to verify the outlets will remain stable. If the outlets are not stable erosion may occur and sediment may enter the wetland system.

   Response: Outlet velocities are low (approximately 4 fps) and should not have an issue with the outlet protection being stable. Erosion control matting is called for to stabilize the ground until the vegetation can be fully established.

8. Additional details including maintenance manholes must be shown on the plans for the three underground detention systems. High level overflow grates for Systems 2P and 3P must be provided on the plans and details. If these details are not shown, the system may not be constructed correctly and function as designed.

   Response: Maintenance manholes have been shown and will be constructed in accordance with the approved shop drawing from the manufacturer.

9. The design engineer must provide a detail of Detention System 2P (36-inch corrugated metal pipe) to verify the drainage calculations and ensure the system is properly constructed. Additionally, CME recommends that plastic pipe be utilized in

the detention system to avoid salt corrosion damage. The plastic pipe will have a considerably longer service life than metal pipe.

Response: Corrugated Metal Pipe has been switched to HDPE pipe. A detail of the pipe bedding has been included. See sheet C-6.1.

10. The design engineer must review and revise the plans and calculations for the bottom elevation of Detention System 2P. The plans indicate a bottom elevation of 611.75 and the report includes a bottom stone elevation of 611.25. The system detail states a minimum 9-inches of stone below the system.

    Response: Detention System 2P is the 36-inch HDPE pipe storage, which has a 6" stone bedding. See detail provided in previous response.

11. The Pre- and Post-Development Comparison table in the Stormwater Management Report contains addition errors in the Total Site rows, Proposed conditions column. The design engineer must review and revise as required.

    Response: The Total Site rows are not strictly additive between the two discharge areas due to their different time of concentrations. The two hydrographs were combined to create the total site flow.

12. The Design Engineer must review and revise the invert elevations for the drainage manhole downstream of Outlet Control Structure #1. It appears too many inverts are listed for this structure and the pipe to the vegetated outlet is sloped in reverse.

    Response: Outlet invert has been revised. Overflow from System 3P enters this manhole.

13. Any proposed free-standing signs must be included on the site plans to ensure there are no sight line conflicts from the driveways.

    Response: Signage is not currently proposed for this site. If considered in the future, it will be located to ensure there are no sight line conflicts from the driveways.

14. Provide a sediment barrier at the bottom elevation of the proposed stormwater quality basin immediately after grading to protect the basin from contamination with fine particles. The barrier must be maintained until the basin slopes are stabilized. If fine sediment eroded during construction enters the bottom of the basin, it will clog the soil pores and infiltration capacity will be significantly reduced.

    Response: Silt fence has been added to the bottom of slopes leading into the basin. It is also required for the contractor to remove any collected sediment from the basin.

15. The gas line on the abutting parcel(s) should be included on the site plans to ensure that no conflicts with proposed infrastructure exist.

    Response: Survey of the abutting parcels is not required. Gas line easement is not located near the improvements with the drainage easement.

16. The proposed landscaping plan may limit location options for stockpiling snow. Snow stockpile location(s) should be shown on the site plans.

    Response: Snow stockpile areas will be identified.

17. The Sewer Design Notes on Sheet G-1.0 reference 42 bedrooms in the calculations for pump chamber sizing; however, it appears the development will have 73 bedrooms. The design engineer must review and revise this calculation must be updated.

    Response: Calculations have been updated for the additional bedrooms. See Sheet G-1.0.

18. Pursuant to the Mansfield Zoning Regulations, the stormwater management design must reduce the peak runoff from the 2-year storm event to fifty percent of the pre-development conditions as well as provide zero increase in peak runoff for the 10-, 25-, and 100- year storm events. The SQM requires a reduction in the 2-year peak runoff to prevent downstream channel degradation. The design engineer must evaluate the downstream watercourse to determine if the 2-year storm reduction is required.

    Response: Stormwater management design has been modified to include a 50% reduction on the 2-year storm event over pre-construction conditions.

19. The proposed pump station must meet the Separation Distances for stormwater pipes & structures outlined by Table 1 of the CT Public Health Code. Watertight pipe can be utilized to reduce these separation distances however, the code does not allow groundwater to be collected in the stormwater system. The proposed perforated pipes are subject to larger separation distances from the pump station

    Response: The separation between the pump station tank and the proposed detention system and catch basins meet separation distance requirements of 25 feet and 10 feet respectively.

20. CME recommends that the stormwater operation and management plan be added to the plan set. This keeps the operation and management plan with the plan set and ensures that the Town and the contractor are aware of stormwater management needs.

    Response: The Operation and management plan listed in the stormwater report has been placed on the plans as well. See Sheet G-1.0.

CME offers the following comments on the Affordability Plan:

21. The Affordability Plan appears to be largely in order. There several items of clarification that the Commission may wish to consider prior to final approval of this document:

    a. The annual status report of the Affordability Plan is submitted, per Section III, to "the Town" by January 31 to show the prior year's activity. The Commission should clarify the specific entity at the Town to whom this report should be

directed.

Response: See separate response for Affordability Plan by Kathleen Dorgan.

b. In the Tenant Selection Process section VII.C.(a).1., a reference is made to a waiting list lottery created using the Administrator's "housing software program". The Commission should verify that the proposed Administrator – in this case, the Mansfield Housing Authority – is in possession of such software.

Response: See separate response for Affordability Plan by Kathleen Dorgan.

c. In the Tenant Selection Process section VII.C.(b).4.(iii).A, the background report for tenant applications must show that "No Applicant has a felony conviction within the last five (5) years for drug-related or violent criminal activity". In the case of drug-related convictions, particularly for non-violent crimes, the national standards appear to be changing, with recent state and federal level commutation of sentences reflecting a recalibration of the severity of non-violent drug-crime penalties. The Commission may wish to reconsider this automatic disqualification standard.

Response: See separate response for Affordability Plan by Kathleen Dorgan.

Site Plan Review Comments to Inland Wetlands Commission
Dated December 23, 2019; Prepared by CME

1. There are two drainage areas: one to the grassed area to the southwest and one to the eastern on-site wetlands. Due to the difference in times of concentration flow paths, peak flows for the two design points should be considered separately. In the provided calculations, peak flows for the two design points are combined to show an overall decrease; however, under the current design, peak flows will be increased to the eastern wetland system.

   Response: See response to Item 1 (Planning & Zoning Comments)

2. The submitted geotechnical report cites a possible high groundwater table at elevation 612 to 613 based on soil borings and wetland elevation observations. The Connecticut Stormwater Quality Manual (SQM) requires test pits to determine an accurate high groundwater elevation for use in stormwater management design. Test pits must be completed pursuant to the SQM for this site and the design must be revised accordingly including required separation from groundwater for each stormwater management system.

   Response: See response to Item 2 (Planning & Zoning Comments)

3. Drawdown calculations must be provided for each of the four detention systems (1 basin and 3 underground systems). CME recommends verifying the soil type through test pits and utilizing USDA soil types and the associated Rawl's Rate to determine infiltration rates. Percolation tests provided to verify drawdown were not performed

at the bottom elevations of the proposed systems, additionally, pursuant to the SQM, percolation testing cannot be used in place of infiltration testing.

Response: See response to Item 3 (Planning & Zoning Comments)

4. The Stormwater Management Report indicates that the detention basin is designed as a dry basin; however, the outlet is set 1.5-feet above the bottom of the basin. Without drawdown calculations to confirm that the basin will drain in less than 24 hours (pursuant to the SQM), the starting water surface elevation must be set at the outlet elevation in the drainage calculation for detention storage. If the basin does not drain, this storage will not be available for detention and the detention will be overestimated.

   Response: See response to Item 4 (Planning & Zoning Comments)

5. A detail for the two vegetated outlets must be provided and velocity calculations must be provided to verify the outlets will remain stable. If the outlets are not stable erosion may occur and sediment may enter the wetland system.

   Response: See response to Item 7 (Planning & Zoning Comments)

6. Provide a sediment barrier at the bottom elevation of the proposed stormwater quality basin immediately after grading to protect the basin from contamination with fine particles. The barrier must be maintained until the basin slopes are stabilized. If ine sediment eroded during construction enters the bottom of the basin, it will clog the soil pores and infiltration capacity will be significantly reduced.

   Response: See response to Item 14 (Planning & Zoning Comments)

7. Pursuant to the Mansfield Zoning Regulations, the stormwater management design must reduce the peak runoff from the 2-year storm event to fifty percent of the pre-development conditions as well as provide zero increase in peak runoff for the 10-, 25-, and 100- year storm events. The SQM requires a reduction in the 2-year peak runoff to prevent downstream channel degradation. The design engineer must evaluate the downstream watercourse(s) to determine if the 2-year storm reduction is required.

   Response: See response to Item 18 (Planning & Zoning Comments)

8. CME recommends that the stormwater operation and management plan be added to the plan set. This keeps the operation and management plan with the plan set and ensures that the Town and the contractor are aware of stormwater maintenance needs.

   Response: See response to Item 20 (Planning & Zoning Comments)

9. Upon review at the field site visitation, the majority of the inland wetland delineation appears correct; however, upon close inspection of an area to the south-central portion of the property, along the rear property line, an area had a large amount of standing water at the surface with obligate wetland species identifiable. The wetland delineation was performed by Ian Cole in June of 2016. The existing flags in the field

were re-staked by a land surveyor based on previous surveyed locations. This area may be an inland wetland based on subsurface soil characteristics of a wetland and the standing water at the surface. Note that the ground was not frozen, though there was an ice layer on the standing water. The soil scientist should review this area to determine if it is in fact a wetland and delineate the its limits accordingly.

Response: See attached correspondence from Ian Cole (Mansfield Housing Authority- Wetlands Delineation Review) dated January 3, 2020 and Ian Cole resume 12-9-19.pdf.

10. The report by Ms. Kaplan indicates that the wetlands on the site are established by surface runoff; however, there is a major groundwater component that exists. While there is some surface discharge into this wetland, it appears that groundwater is the primary source of water in this wetland given its size and height of some of the tussock sedges. The report does not address or classify the inland wetland soil and upland soil types on the site. Furthermore, the report does not evaluate the functions and values of the existing wetlands. This could have been done using the rationales of a standardized evaluation method (e.g. the US Army Corps of Engineers' escriptive Approach 1995) and using her best professional judgment. These functions include: ground water recharge, flood flow alteration, sediment/shoreline stabilization, sediment/pathogen retention, nutrient removal, production export, aquatic habitat, endangered species habitat, visual quality/aesthetics, educational/scientific value, recreation- passive or active and uniqueness/historical.

    Response: Ms. Kaplan was not responsible for the wetland delineation, soil characterization. Ms. Kaplan's report was to identify the health and quality of the wetland and the potential impact this proposed project would have on this natural resource. The Soil Scientist will provide the soil evaluation and characterization.

11. The stormwater basin is designed as a dry basin with many proposed plantings in the basin bottom. Due to the already existing high groundwater at the surface towards the rear property line, it may be appropriate to design the basins as wet basins and adjust the plantings accordingly.

    Response: The dry basin is approximately 2 feet above groundwater as identified in nearby borings. It is not expected to be a wet basin.

12. We generally agree with Ms. Kaplan's evaluation of the potential effects on the wetlands from the proposed development. In addition to the evaluation, below are additional suggestions to enhance and protect the wetland system:
    a. Use native plantings for the trees, shrubs and groundcover in the landscape design.
    b. No use of fertilizers, pesticides and/or herbicides in close proximity of the wetlands.
    c. That placards on fence posts be placed along the existing wetland that acknowledges the wetland resource and that no dumping of any type is allowed, including brush and leaves and other types of debris.

    Response: a. Only native and adaptively native plants have been called for on the plans. We are reviewing the recommendations provided for alternate plantings and

will respond at a future time. b. Agreed c. Placards will be considered if funding is available.

13. In conclusion, based on the proposed activities and the physical characteristics of the site we do not expect that there will be a significant adverse effect to the inland wetlands and watercourses on or off the site from the development.

    Response: Agreed

Very truly yours,

BSC Group-Connecticut, Inc.

Robert S, Newton, PE, LEED AP

Site Plan Review

Engineers
Designers
Consultants
Planners
Scientists

December 23, 2019

Mansfield Planning & Zoning Commission
C/O Linda Painter, Director of Planning & Development and Jennifer Kaufman, Senior Planner & Inland Wetlands Agent
Audrey P. Beck Municipal Building
4 South Eagleville Road
Storrs Mansfield, CT 06268
Via email: painterlm@mansfieldct.org and kaufmanjs@mansfieldct.org

RE: **Eagleville Green, 113-121 South Eagleville Road**

Commission Members,

As requested, CME Associates, Inc. (CME) have reviewed the following materials for the proposed house development on South Eagleville Road:

Item 1 Thirty-eight (38) sheet site plans "Eagleville Green, 113-121 South Eagleville Road, Mansfield, Connecticut" prepared by BSC Group, dated November 25, 2019

Item 2 Stormwater Management Report, Eagleville Green, prepared by BSC Group, dated October 2019, Revised November 2019

Item 3 Affordability Plan entitled The Mansfield Nonprofit Housing Development Corporation, Eagleville Green, 113-121 South Eagleville Road, Mansfield, Connecticut prepared by Shipman & Goodwin LLP, dated November 2019 and noted as "Zoning Submission Draft".

Based on a review of these materials, we offer the following review comments based upon the Mansfield Zoning Regulations, the requirements of CT General Statute Chapter 126a, Section 8-30g, and other applicable standards. This type of development

(8-30g) provides relief from most local zoning regulations, therefore the majority of CME's review focused on items that may present health and safety risks and prevention of drainage and utility issues:

1. There are two drainage areas: one to the grassed area to the southwest and one to the eastern on-site wetlands. Due to the difference in times of concentration flow paths, peak flows for the two design points should be considered separately. In the provided calculations, peak flows for the two design points are combined to show an overall decrease; however, under the current design, peak flows will be increased to the eastern wetland system.

2. The submitted geotechnical report cites a possible high groundwater table at elevation 612 to 613 based on soil borings and wetland elevation observations. The Connecticut Stormwater Quality Manual (SQM) requires test pits to determine an accurate high groundwater elevation for use in stormwater management design. Test pits must be completed pursuant to the SQM for this site and the design must be revised accordingly including required separation from groundwater for each stormwater management system.

3. Drawdown calculations must be provided for each of the four detention systems (1 basin and 3 underground systems). CME recommends verifying the soil type through test pits and utilizing USDA soil types and the associated Rawl's Rate to determine infiltration rates. Percolation tests provided to verify drawdown were not performed at the bottom elevations of the proposed systems, additionally, pursuant to the SQM, percolation testing cannot be used in place of infiltration testing.

4. The Stormwater Management Report indicates that the detention basin is designed as a dry basin; however, the outlet is set 1.5-feet above the bottom of the basin. Without drawdown calculations to confirm that the basin will drain in less than 24 hours (pursuant to the SQM), the starting water surface elevation must be set at the outlet elevation in the drainage calculation for detention storage. If the basin does not drain, this storage will not be available for detention and the detention will be overestimated.

5. The outlet elevation of the detention basin is noted as 614.5 on the site plans, this must be properly modeled in the HydroCAD calculations.

6. The outlet control structure table on Sheet C-6.1 indicates a 15-inch diameter for Orifice B in Outlet Control Structure #1. It appears this information is for the overflow invert. The Design Engineer must review and revise the table as necessary.

7. A detail for the two vegetated outlets must be provided and velocity calculations should be provided to verify the outlets will remain stable. If the outlets are not stable erosion may occur and sediment may enter the wetland system.

8. Additional details including maintenance manholes must be shown on the plans for the three underground detention systems. High level overflow grates for Systems 2P and 3P must be provided on the plans and details. If these details are not shown, the system may not be constructed correctly and function as designed.

9. The design engineer must provide a detail of Detention System 2P (36-inch corrugated metal pipe) to verify the drainage calculations and ensure the system is properly constructed. Additionally, CME recommends that plastic pipe be utilized in the detention system to avoid salt corrosion damage. The plastic pipe will have a considerably longer service life than metal pipe.

10. The design engineer must review and revise the plans and calculations for the bottom elevation of Detention System 2P. The plans indicate a bottom elevation of 611.75 and the report includes a bottom stone elevation of 611.25. The system detail states a minimum 9-inches of stone below the system.

11. The Pre- and Post-Development Comparison table in the Stormwater Management Report contains addition errors in the Total Site rows, Proposed conditions column. The design engineer must review and revise as required.

12. The Design Engineer must review and revise the invert elevations for the drainage manhole downstream of Outlet Control Structure #1. It appears too many inverts are listed for this structure and the pipe to the vegetated outlet is sloped in reverse.

13. Any proposed free-standing signs must be included on the site plans to ensure there are no sight line conflicts from the driveways.

14. Provide a sediment barrier at the bottom elevation of the proposed stormwater quality basin immediately after grading to protect the basin from contamination with fine particles. The barrier must be maintained until the basin slopes are stabilized. If fine sediment eroded during construction enters the bottom of the

basin, it will clog the soil pores and infiltration capacity will be significantly reduced.

15. The gas line on the abutting parcel(s) should be included on the site plans to ensure that no conflicts with proposed infrastructure exist.

16. The proposed landscaping plan may limit location options for stockpiling snow. Snow stockpile location(s) should be shown on the site plans.

17. The Sewer Design Notes on Sheet G-1.0 reference 42 bedrooms in the calculations for pump chamber sizing; however, it appears the development will have 73 bedrooms. The design engineer must review and revise this calculation must be updated.

18. Pursuant to the Mansfield Zoning Regulations, the stormwater management design must reduce the peak runoff from the 2-year storm event to fifty percent of the pre-development conditions as well as provide zero increase in peak runoff for the 10-, 25-, and 100- year storm events. The SQM requires a reduction in the 2-year peak runoff to prevent downstream channel degradation. The design engineer must evaluate the downstream watercourse to determine if the 2-year storm reduction is required.

19. The proposed pump station must meet the Separation Distances for stormwater pipes & structures outlined by Table 1 of the CT Public Health Code. Watertight pipe can be utilized to reduce these separation distances however, the code does not allow groundwater to be collected in the stormwater system. The proposed perforated pipes are subject to larger separation distances from the pump station.

20. CME recommends that the stormwater operation and management plan be added to the plan set. This keeps the operation and management plan with the plan set and ensures that the Town and the contractor are aware of stormwater management needs.

CME offers the following comments on the Affordability Plan:

21. The Affordability Plan appears to be largely in order. There several items of clarification that the Commission may wish to consider prior to final approval of this document:

a. The annual status report of the Affordability Plan is submitted, per Section III, to "the Town" by January 31 to show the prior year's activity. The Commission should clarify the specific entity at the Town to whom this report should be directed.

b. In the Tenant Selection Process section VII.C.(a).1., a reference is made to a waiting list lottery created using the Administrator's "housing software program". The Commission should verify that the proposed Administrator – in this case, the Mansfield Housing Authority – is in possession of such software.

c. In the Tenant Selection Process section VII.C.(b).4.(iii).A, the background report for tenant applications must show that "No Applicant has a felony conviction within the last five (5) years for drug-related or violent criminal activity". In the case of drug-related convictions, particularly for non-violent crimes, the national standards appear to be changing, with recent state and federal level commutation of sentences reflecting a recalibration of the severity of non-violent drug-crime penalties. The Commission may wish to reconsider this automatic disqualification standard.

Please contact us if you have any questions on the above comments.

Sincerely,

Chuck Eaton, PE, LEED-AP
Civil Engineering Manager

John Guszkowski, AICP
Lead Planner

u:\muni_ct\mansfield\application reviews\mansfield-green-hud-s.eagleville\2019-12-23_pzc-review-letter.docx

Site Plan Review Comments

OVERVIEW

All Article, Section, and Page Numbers refer to the November 1, 2019 Zoning Regulations of the Town of Mansfield, which can be accessed at http://www.mansfieldct.gov/DocumentCenter/View/4570/Zoning-Regulations, with the exception of regulations to the SER-HO District. The SER-HO regulations are expected to be adopted on December 16, 2019 and become effective on January 1, 2020. Excerpts of applicable regulations are provided in the green rows in *italics.* Staff comments relevant to that regulation are in the white rows beneath with bullets.

ARTICLE NUMBER	SECTION NUMBER	PAGE NUMBER	REGULATION/COMMENT
5	A.3.a	5.2	**A completed application form, including fee payment:** Said application must be signed by the owner of the subject property or by an individual with a legally binding contract to purchase the subject property. *Response: Noted.*
			Need signed copy of site plan checklist; also need to check off whether approval block requirements were met on the checklist. *Response: Noted.*

5	A.3.c	5.2	**Notification of Abutting Property Owners:** The applicant shall be responsible for notifying all property owners abutting the site of a proposed use or activity requiring site plan approval, including property owners across the street from a subject site (as measured at right angles to straight street lines and radial to curved street lines). Said notification, which shall be sent by Certified Mail, within seven (7) days of the Commission's receipt of the application, shall include the applicant's Statement of Use and mapping that depicts areas of proposed activity. The notice also shall reference the fact that the complete application is available for review in the Mansfield Planning Office. Notification forms available in the Mansfield Planning Office shall be utilized for notifying abutting property owners. *Response: Noted.*
			Copies of notice, attachments and proof of mailing shall be submitted prior to the opening of the public hearing. *Response: Noted.*
5	A.3.d	5.2	**Site Plan Requirements**
			• *Label proposed drainage easement on plans* *Response: Proposed easement location will be shown on Sheet C-4.* • *Provide specifications for dumpster enclosure (see staff memo and attachments for additional information)* *Response: Dumpster Enclosure Detail is Shown on Sheet C-6.5* • *Change reference to "hay bale" on Sheet C-60.0 to "straw bale"* *Response: Reference to "hay bale" on Sheet C-6.0 has been changed to "straw bale"*

5	A.3.e	5.4	**Sanitation Report:** The application shall submit a written sanitation report, with information on site characteristics and the proposed sanitary systems, including water supply and waste disposal. As necessary said report shall be prepared by the applicant's registered professional engineer or registered sanitarian. The report shall demonstrate that the subject sanitary systems will comply with state and local Health Department requirements and all other applicable regulations including the Town's Sand and Gravel Regulations. Where a separate permit to fill a site is necessary, said permit shall be obtained and the fill shall be placed prior to the submission of a site plan application for the subject use or development project. Necessary onsite testing must be coordinated with the Town Health Officer. *Response: Noted*
			As the site will be served by public water and sewer, the requirements of the sanitation report can be met by updating the Statement of Use to describe the proposed water and sewer connections. *Response: Statement of Use will be updated accordingly.*
5	A.3.g	5.4	**Other information:** Dependent on the nature of the proposal, the Commission shall have the right to require additional detailed information if it finds the information is necessary to review the application and determine compliance with applicable regulations and performance standards. Such information may include but shall not be limited to: traffic impact analysis, including specific information on how construction traffic will be regulated, routed and monitored; aquifer, watershed and flooding data; drainage calculations and documentation of necessary drainage rights or easements; environmental and neighborhood impact analysis; erosion and sedimentation control plans, future plans for adjacent land under the control of the subject applicant or owner; information on homeowner or property-owner associations; maintenance provisions; estimates of site improvements costs, and bonding agreements. *Response:Noted*
			See comments in staff memo and from CME with regard to traffic statement. *Response: Traffic Statement will be updated with the additional traffic information provided by the DOT*

6	B.4.n	6.5	**Energy Considerations -** Where Planning and Zoning Commission approval is required for a land use activity, applicants shall demonstrate to the Commission that their pending proposal has considered, to the degree physically and economically possible, the utilization of the physical environment and natural energy sources, such as solar orientation, to help heat, cool or illuminate the proposed use and accordingly minimize a dependence on fossil fuels and mechanical equipment. Potential impacts on neighboring properties shall also be evaluated. Factors to be considered include: roadway, lot and building orientation, natural and manmade topographic features, soil and subsoil characteristics, existing and proposed vegetative cover, and shadow patterns on neighboring properties. Wherever feasible: • building orientation and design should maximize south facing walls; • an east-west orientation should be considered for streets and private access roads; • building height and bulk and landscaping improvements should minimize shadow patterns on adjacent properties; and • walls and accessory structures should be located in areas that will not diminish south wall exposure. *Response: Noted*
			Update Statement of Use to describe measures taken to address the energy consideration requirements *Response: See revised Statement of Use.*
6	B.4.o	6.5	**Parking and Loading Areas** - Adequately sized, constructed and located onsite parking areas shall be provided for all land use activities so that the use of adjacent roadways is not obstructed. Where required, on- site loading areas which do not conflict with parking areas or circulation ways shall be provided. See Article X, Section D for more specific requirements. In addition, state standards for fire access and handicapped parking shall be incorporated into all parking and loading designs. *Response: Noted. Parking has been designed in accordance with local and state requirement.*
			See comments in memo with regard to fire/emergency vehicle access and turning radius for ladder trucks. *Response: Site has been designed to accommodate emergency vehicle access. See Sheet C-3.1*

6	B.4.p	6.5	**Road and Drainage Standards** - All road and drainage improvements, including private roads, driveways and parking and loading areas, must be designed and constructed to promote vehicular and pedestrian safety and the proper discharge of storm water run off. Appropriate separation of pedestrian and vehicular traffic and adequate sightlines for all intersections, including those within a private parking or loading areas, must be incorporated into development plans. All road and drainage improvements, with the possible exception of roadway width, should conform with the standards and specifications of the Mansfield Public Works *Response: Noted*
			Department (available in the Mansfield Engineering Office). As appropriate, peak storm water discharges should be retained on site to minimize or prevent downstream impacts. *Response: Noted. Detention systems are design in accordance with local regulations.*
			See comments in staff memo and from CME with regard to proposed second curbcut and stormwater management.

6	B.4.q	6.5	**Landscaping and Buffering** **1. General** - All land use activities and particularly structures, parking areas and outdoor storage areas associated with commercial, industrial, or multi-family residence uses, shall include strategically placed landscape and buffer areas, which shall be designed to protect and preserve property values; to provide privacy from visual intrusion, light, dirt and noise; to prevent the erosion of soil and to provide water recharge areas; to promote pedestrian and vehicular safety; and to enhance the environmental quality and attractiveness of Mansfield. Except where alternative uses, such as parking areas, are provided for in other sections of these regulations, all required setback areas shall either be attractively landscaped with lawns trees and shrubs or, where appropriate, left in a sightly and well kept natural state. Landscape plans submitted in conjunction with a land use application shall identify, by type, size, height and placement, all proposed landscaping and all existing landscape features to be retained. Plants identified in the current State Department of Environmental Protection Agency listing of invasive species shall not be used. All submitted landscape plans must be adequate to meet the intended aesthetic, buffer and environmental purposes. Particular attention should be given to parking and loading areas, outside storage areas and shadow patterns with respect to south wall and rooftop solar access. See Article X, Section D.18 for supplemental interior parking lot landscaping requirements and Article X, Section R for architectural and design standards. *Response: Noted.* **2. Landscape Buffer -** The Commission shall have the authority to require up to a 75 foot wide landscaped buffer area where a site abuts a more restrictive zone or an existing residential use. In addition, the Commission shall have the authority to require a landscaped buffer area when a commercial, industrial, multi- family or other non-residential use abuts a historic structure or a cemetery. The width of the buffer for commercial, industrial, multi-family or other non-residential use that abuts a historic structure or cemetery shall be determined with reference to the existing physical characteristics of the property, such as topography, adjacent flood hazard, the location of existing structures, existing non-conforming lot characteristics, the nature of activity or the nature of the landscaping plan but in no event may the Commission require more than a 75 foot buffer. Buffers for a commercial, industrial, multi-family or other non-residential use that abuts an environmentally sensitive feature such as a river, brook, pond or wetland area shall be as determined by the Inland Wetlands Agency. The designated buffer area shall be attractively landscaped and shall be designed to achieve the desired buffering objectives, which may include the visual screening of the proposed use from abutting properties, the minimizing of auditory impacts and the protection and enhancement of historic structures, cemeteries or environmentally sensitive features. The buffer design shall consider vegetated earthen berms, multiple rows of staggered evergreens, selective plantings, walls, fencing, existing vegetation and other landscape measures. Due to special provisions contained or referenced in Article X, Section S, the landscape buffer requirements contained in this subparagraph shall not apply to land zoned SC-SDD. *Response: Noted.*

			• *Given that the property abuts another multi-family residential development and a natural gas facility, no buffering to protect adjacent uses is needed.* *Response: Noted.*
			• *Staff defers to the Inland Wetlands Agent and Agency with regard to the proposed setback buffer between the area of disturbance and the on-site wetland. The applicant should consider some type of visual screening along the property line abutting the natural gas facility to screen that facility from view of the residents.* *Response: Noted.* • *The architectural site plan identifies a "rain garden in the courtyard formed by three of the buildings; however, this is identified as a detention pond on the engineering plans. If this is intended to be a rain garden, landscape plantings should be revised to be consistent with rain garden design and a formal maintenance plan should be developed.* *Response: This area will function as a detention basin.* • *Suggest adding another dogwood next to the dumpster enclosure to screen view of the utility box.* *Response: Noted.* • *Consider shifting the tree located in the landscape island between buildings 5 and 6 closer to the parking lot to improve summer shade coverage* *Response: Noted.* • *Why is there a light fixture next to the detention pond/rain garden in the courtyard? Is the entire courtyard intended to be lit for safety?* *Response: The lighting was located in the courtyard area to provide accent lighting in the area. Not designed as security lighting.* • *Clarify whether there is a path around the detention pond/rain garden. Shows on photometrics plan but not on site layout plan or landscape plan.* *Response: There will not be a path around the basin.*

6	B.4.r	6.6	**Site Development Principles** **2.j:** Unless approved by the Commission, topsoil shall not be removed from developing areas except for sites of structures or manmade improvements. The topsoil from areas intended for such improvements shall be redistributed within the boundaries of the subject site to facilitate the provision of a suitable base for seeding and plantings. As necessary, additional topsoil shall be brought to the site. Soil and other materials shall not be temporarily or permanently stored in locations, which would cause suffocation of root systems of trees to be preserved. Applicable sand and gravel regulations shall be complied with.
			Add note that no topsoil is to be removed from the site. *Response: See Sheet G-1.0 for note indicating no topsoil to be removed from the site.*
6	B.4.S	6.9	**Erosion and Sedimentation Control**
			Update plan to address the following: • *4.b.1-No schedule is provided in narrative for grading and construction activities, including sequencing* *Response: Sequencing will be provided by the selected contractor.* • *4.g-No contingency plan provided* *Response: Site will be monitored weekly for erosion control issues.* • *4.h-No information provided on specific individual responsible for compliance* *Response: Person will be identified at the time of construction.* • *7.b-No zoning permit to be issued until erosion and sedimentation controls have been installed per the approved specifications and a certificate is provided to this effect.* *Response: Sedimentation controls will be installed at the on-set of construction.*

6	B.4.t	6.12	**Stormwater Management**
			See comments from CME *Response: Noted.*
10	A.12	New	**Special Provisions for SER-HO Zone**
			Revise plans to address following: • *d. Include bed per acre calculation on sheet T-1.0* *Response: Table on T-1.0 will be updated.* • *d. Revise table on A1.1a to match density on sheet T-1.0* *Response: Table will be updated to match* • *l. Please verify that the linear feet of planted parking lot perimeter shown on sheet L-1.1 is native or adaptive landscaping, not turf.* *Response: The landscaping is native or adaptive landscaping*
10	C	10.14	**Signs**
			No sign information has been provided for review. Recommend providing sign design for PZC review, specifically with regard to free-standing signs per comment from CME regarding sight lines. *Response: No signs are proposed at this time. If a sign is desired by the owner, a permit will be applied for at that time.*

10	D.11	10.29	**Accessible Parking Spaces** - All proposed commercial, industrial, governmental and multi-family residential land uses shall provide accessible parking spaces for handicapped individuals. Said spaces shall conform with Section 14-253a(h) of the State Statutes. At a minimum, accessible parking spaces shall be provided in the number required by the State Building Code. However, additional handicap spaces may, depending on the number of entrances and the nature of the population served, be required by the Commission. Wherever feasible, the parking spaces located closest to a primary entrance shall be designated as accessible parking spaces. Appropriate access ways to and from the adjacent primary entrance shall be developed in association with all accessible parking spaces. All accessible parking spaces shall be clearly designated with signs situated approximately 5 feet above grade and, wherever possible, with pavement markings. The required crosshatch area shall be located on the right-hand side of each accessible space. *Response: Noted. Accessible parking is provided in accordance with state regulations.*
			Revise site plan to meet requirements related to location of crosshatch area for accessible spaces *Response: The crosshatch meets state regulations as designed.*
10	D.17	10.30	**Lighting** - All parking and loading areas shall be adequately illuminated in order to prevent vehicular and pedestrian safety problems. All lighting fixtures shall be arranged (and, where appropriate, shielded) to prevent glare and to direct light away from any neighboring residential properties (also see Article VI, Section B.4.g.). *Response: Noted.*
			There are areas in the parking lot with less than 0.5 footcandles, which is considered the minimum for safety in low activity areas. Revise spacing of light poles to ensure that minimum lighting for pedestrian safety is maintained. *Response: Lighting will be modified to provide a minimum of 0.5 footcandles.*

10	D.18	10.30	**Snow Removal** - All parking and loading areas shall be designed, constructed and maintained to address snowplowing and snow removal needs for the site. All loading areas and the minimum number of parking spaces required by these regulations and any Commission approval requirements shall be available for year- round use. *Response: Noted.*
			No snow removal storage areas are identified on the plan. When locating, consult with Inland Wetlands Agent to reduce impact of salt and other deicing materials on wetland. *Response: Snow storage areas have been identified on the plans.*
10	H	10.45	**FILLING/GRADING/EXCAVATION/REMOVAL/PROCESSING OF SOIL, STONE, SAND AND GRAVEL, PEAT MOSS AND OTHER SIMILAR MATERIALS**
			No information on volume of material to be brought to the site, removed from the site or relocated on the site has been provided. Please provide so that staff can determine whether the provisions of this Section of the Regulations apply. *Response: Cut/Fill calculations will be provided.*

10	R	10.65	**Architectural and Design Standards**
			Due to the fact that this is an 8-30g application and these standards do not strictly relate to public health and safety, the following comments are advisory in nature and are not requirements. • *3.c. Given the small, compact nature of the site, it may be beneficial to reduce the number of different building elevations (proposed at 4). There seems to be a mix of traditional(buildings 1, 2, 3 and 7) and more modern elements (buildings 4, 5 and 6), which on a larger site may help reduce monotony but on a small site such as this may simply be introducing too much and become visually confusing.* *Response: Thank you this advice will be considered as the project advances.* • *3.f. No information is provided regarding mechanical systems. In addition to roof-mounted systems, consideration should also be given to potential location and screening of ground systems.* *Response: Thank you this advice will be considered as the project advances.* • *3.g. No information has been provided with regard to building materials.* *Response: Thank you this advice will be considered as the project advances.*

			• *3.j. No information has been provided with regard to signage, lighting, accessory structures etc. It is unclear where the fencing detail provided applies as the renderings appear to show low fencing associated with individual units and the spec identifies a 6 foot tall fence. In particular, building- mounted lighting and design of the waste/garden sheds should be provided given their impact on the overall design.* *Response: Thank you this advice will be considered as the project advances.* • *4.d. No information has been provided with regard to building lighting.* *Response: Thank you this advice will be considered as the project advances.* • *4.e. To reduce blue-light impacts on wetlands and wildlife habitat, lighting should be changed to 3,000 Kelvin or less for a warmer fixture.* *Response: Noted.* • *4f. As noted previously, please provide pavement markings to indicate pedestrian crossings of drive aisles.* *Response: pedestrian crosswalks are not typically required in residential parking areas.*

dorgan architecture & planning

10 Eastwood Road, Storrs, CT 06268 01.518.469.6464 Registered Architect NCARB

To: Linda Painter

From: Kathleen A. Dorgan, Principal

Re: Eagleville Green Affirmative Fair Housing Marketing Plan

Attached please find a revised Affordability Plan and the Affirmative Fair Housing Marketing Plan. This plan along with zoning regulations approved and the submitted map amendment meets the requirements of Connecticut Chapter 126a Section 8-30g(b)(1)

> "Any person filing an affordable housing application with a commission shall submit, as part of the application, an affordability plan which shall include at least the following: (A) Designation of the person, entity or agency that will be responsible for the duration of any affordability restrictions, for the administration of the affordability plan and its compliance with the income limits and sale price or rental restrictions of this chapter; (B) an affirmative fair housing marketing plan governing the sale or rental of all dwelling units; (C) a sample calculation of the maximum sales prices or rents of the intended affordable dwelling units; (D) a description of the projected sequence in which, within a set-aside development, the affordable dwelling units will be built and offered for occupancy and the general location of such units within the proposed development; and (E) draft zoning regulations, conditions of approvals, deeds, restrictive covenants or lease provisions that will govern the affordable dwelling units."

Please find the following in response to the comments received: from CME and Linda Painter:

CME offered the following comments on the Affordability Plan:

1. The Affordability Plan appears to be largely in order. There several items of clarification that the Commission may wish to consider prior to final approval of this document:

    a. The annual status report of the Affordability Plan is submitted, per Section III, to "the Town" by January 31 to show the prior year's activity. The Commission should clarify the specific entity at the Town to whom this report should be directed.

    Response: *This comment is directed to the Commission not the applicant.*

    b. In the Tenant Selection Process section VII.C.(a).1., a reference is made to a waiting list lottery created using the Administrator's "housing software program". The Commission should verify that the proposed Administrator – in this case, the Mansfield Housing Authority – is in possession of such software.

Response: This comment is directed to the Commission not the applicant.

c. In the Tenant Selection Process section VII.C.(b).4.(iii).A, the background report for tenant applications must show that "No Applicant has a felony conviction within the last five (5) years for drug-related or violent criminal activity". In the case of drug-related convictions, particularly for non-violent crimes, the national standards appear to be changing, with recent state and federal level commutation of sentences reflecting a recalibration of the severity of non-violent drug-crime penalties. The Commission may wish to reconsider this automatic disqualification standard.

Response: *This provision is not included in the revised Affordability Plan.*

Linda Painter offered the following comments regarding the Affordable Housing Plan on behalf of Mansfield Planning and Zoning:

Draft Affordability Plan
The note at the beginning of the Affordability Plan states that the Plan is in draft form due to
changes in income data from year to year as well as the fact that the developer has not yet secured the principal financing that will qualify the project as "assisted housing" pursuant to Sec.
8-30g(a)(3), C.G.S. Accordingly, the provisions of Article 10, Section W.8 related to provision of
deed restrictions do not apply. Should this development change from assisted housing to a setaside development pursuant to Sec. 8-30g, a revised affordablility plan will need to be submitted and approved by the Commission.

Response: *This language is not included in the revised Affordability Plan.*

Comment: See CME's comments on the affordable housing plan
Response: *See above.*

Recommendations. Revise affordable housing plan per CME's comments.
Response: *See above*

Comment: The sample calculations for establishing maximum rent (Section IX) as well as calculation of maximum income (Sections V and VII, Schedule D) address the ways in which updated annual income data will be used to determine tenant eligibility and maximum rent. The definition of Community and Schedule C identify the number and type of income-restricted units based on the assumption that 30% of units will be affordable. If the financing product results in changes to the percentage, number and type of income-restricted units, these sections should be updated accordingly.

Response: *MNHDC will submit revisions if required by 8-30g due to a decrease in the number or percentage of affordable units serving each required category.*

P1364-2 Staff Review Comments-Original Submission
Page 10
Recommendations:
1. Introductory Note. Delete the second sentence of the Introductory Note and replace with the following:
"The Affordability Plan will be updated once financing is secured to revise the following information in accordance with the specific requirements of the lending program: tenant selection, application, income verification, annual recertification procedures, and number and type of affordable units (by income level). The revised Affordability Plan and a summary of changes shall be submitted for the Commission's records within 30 days of completion."

Response: *This provision is not included in the revised Affordability Plan.*

2. Plan Revisions. Add a section on Affordability Plan Revisions (suggested Article XII, renumbering existing Articles XII and XIII. This Section should identify when plan revisions are required (i.e. if the financing requirements change); and the types of changes to the Affordability Plan that would require PZC approval (i.e. any change that reduces the number of affordable units/income requirements below that which was approved by the Commission; change from assisted housing to set-aside development, etc.) Changes that are needed to comply with financing requirements should be submitted for records but may not need Commission approval.

Response: *MNHDC will submit revisions as required by law including any reduction in the number or percentage of affordable units in each of the required categories.*

Affirmative Fair Housing Marketing Plan
Pursuant to Sec. 8-30g(b)(1)(B), C.G.S., the affordability plan required as part of the affordable housing application must include "an affirmative fair housing marketing plan governing the sale or rental of all dwelling units." The minimum standards for compliance with this requirement are further established in Section 8-30g-7 of the Regulations of Connecticut State Agencies:
"(3) With respect to an affirmative fair housing marketing plan filed in accordance with an affordable housing development application, the provisions of sections 8-37ee-1 et seq. of the Regulations of Connecticut State Agencies, and particularly sections 8-37ee-301 and 302, shall serve as the basis for such plan, provided that such regulations, including the procedures therein, shall be guidelines, not requirements. Collection and dissemination of information about available price restricted and market rate dwelling units shall include, at a minimum:

(A) Analyzing census and other data to identify racial and ethnic groups least represented in the population;
(B) Announcements/advertisements in publications and other media that will reach minority populations;
(C) Announcements to social service agencies and other community contacts serving low-income minority families in the region (including churches, civil rights organizations, housing authorities, and legal services organizations);
(D) Assistance to minority applicants in processing applications;
(E) Marketing efforts in geographic area of high minority concentrations within the housing market area;
(F) Beginning marketing efforts prior to general marketing of units, and repeating again during initial marketing, at fifty percent (50%) completion, and thereafter at reasonable period intervals with respect to resales or re-rentals; and
(G) Collection of basic racial and ethnic information for all residents and persons on the wait list for the development.

Response: *The Mansfield Housing Authority Affirmative Fair Housing Marketing Plan is attached.*

THE MANSFIELD NONPROFIT HOUSING DEVELOPMENT CORPORATION

Eagleville Green
113-121 SOUTH EAGLEVILLE ROAD
MANSFIELD, CONNECTICUT

Affordability Plan

Zoning Submission Draft
January 2020

Submitted by The Mansfield Nonprofit Housing Development Corporation

Updated January 21, 2020

DEFINITIONS:

"**Community**" – means Eagleville Green, a multi-family rental development at 113-121 South Eagleville Road approved as a South Eagleville Road-Housing Opportunity District ("SER-HO") in **Schedule A**. The site plan is on file with the Commission. All units within the Community shall be constructed in compliance with the minimum specifications set forth in **Schedule B**. The initial location, design and features of the income-restricted housing units in the Community are set forth in **Schedule C**. The Community shall have 42 dwelling units, a minimum of thirty percent (30%) of which shall be income restricted. The specific location of the income-restricted units within the Community may be subject to change; however, the required number and mix of income-restricted units shall be maintained at all times, and all units, market and income-restricted, shall be comparable in design and amenities.

"**Developer**" – means The Mansfield Nonprofit Housing Development Corporation, of Mansfield, Connecticut, or its successors and assigns.

1. The following Affordability Plan is submitted pursuant to CGS Section 8-30g (b)(1)(A) – (E).

A. Entity Responsible for Administration and Compliance.

This Affordability Plan will be administered by the Mansfield Housing Authority or its successors and assigns, and in such role is hereafter referred to as "Administrator." The point of contact for the Administrator shall be Rebecca Fields, Executive Director or her successor, who can be reached at (860) -487-0693. The Administrator shall submit a status report in the format agreed upon by the Administor and the Commission, to the Town on compliance with this Affordability Plan annually by January 31 to show the prior year's activity.

B. Following is the Affirmative Fair Housing Marking Plan which can be found on the Mansfield Housing Authority's webpage as it may change from time to time.

MANSFIELD HOUSING AUTHORITY
Affirmative Fair Housing Marketing Plan (AFHMP)

1. Housing Program Name and Address:
   Affordable Housing (Excluding Section 8 Voucher Program)
   Mansfield Housing Authority
   309 Maple Road Storrs, Tolland County, CT 06268

2. Census Tracts used for Town of Mansfield Housing Market: 8811, 8813, 8815

3. **Local Market** Demographics includes the jurisdiction of the Mansfield Housing Authority (MHA): Towns of Mansfield, Coventry, Willington Ashford and Chaplin.

4. **Expanded Market** Demographics includes Windham, Tolland, Hartford, and New London Counties

5. All correspondence should be sent to the Managing Agent :
   Mansfield Housing Authority
   309 Maple Road
   Storrs, CT 06268
   Telephone: 860-487-0693
   Email: Rfields@mansfieldhousingct.org

6. Entity Responsible for Marketing: See 5 above

7. Current Adult Participants (Non-Section 8) and Demographics:
   a. Current Participants (Dec. 2019)

White	62.50%
Black	2.67%
Hispanic	4.46%
Asian	34.82%
Am. Indian and Alaskan Native	0.00%
Native Hawaiian or Pacific Islander	0.00%
Persons with Disabilities	19.64%
Families with Children (households)	46.66%
Elderly (62+)	27.67%

   b. Local Market Demographics:

White	83.31%
Black	2.86%
Hispanic	5.39%
Asian	5.84%
Am Indian	.09%
Native Hawaiian or Pacific Islander	0.00%
Persons with Disability	7.87%
Families with Children	26.73%
Elderly (62+)	13.37%

   c. Local Market: Renters with income < 80% Area Median Income

White	83.24%
Black	1.05%
Hispanic	6.91%
Asian	7.56%
American Indian	0%

Pacific Islander	0%
Other	1.23%

d. Town of Mansfield Demographics: (Census Tracks 8811, 8813, and 8815)

White	75.69%
Black	4.90%
Hispanic	6.42%
Asian	9.91%
Am Indian	.10%
Native Hawaiian or Pacific Islander	0.00%
Persons with Disability	7.86%
Families with Children	8.65%
Elderly (62+)	16.79%

e. Town of Mansfield: Renters with incomes < 80% Area Median Income

White	80.04%
Black	1.70%
Hispanic	6.06%
Asian	11.51%
American Indian	0%
Pacific Islander	0%
Other	0.68%

8. a. Expanded Housing Market Demographics

White	70.68%
Black	9.79%
Hispanic	14.58%
Asian	4.44%
American Indian	.17%
Native Hawaiian or Pacific Islander	0.00%
Persons with Disability	12.14%
Families with Children	26.99%
Elderly (62+)	16.76%

b. Renters <80% AMI

White	51.96%
Black	16.81%
Hispanic	26.03%
Asian	2.49%
American Indian	0.25%
Pacific Islander	0.04%
Other	2.41%

Least Likely to Apply:
We consider the least likely to apply to be persons who are Black and Hispanic families.

9. Residency Preference: The MHA has no preferences.

10. Marketing Activities.
The following will be sent with the initial opening announcement attached to all Partner Organization:
Mansfield's Waiting List for Non-Section 8 Housing will Remain Open
Providing housing first can help individuals and families successfully deal with life's challenges. We understand this and want to reach out to all individuals and families that might be interested in applying to our affordable housing programs. We are sending this announcement to you in an effort to reach as many people as possible. We would appreciate it if you would share this with anyone you think would be interested. Information on each town in our jurisdiction can be found at the following web addresses:
    1. www.mansfieldct.gov
    2. www.willingtonct.org
    3. www.coventryct.org
    4. www.ashfordtownhall.org
    5. www.chaplinct.org

Partner Organizations to receive the initial opening of the waiting List

1. Town of Mansfield
    a. Social Services
    b. Senior Center
    c. Library
    d. Community Center

2. Town of Willington
    a. Social Services
    b. First Selectman Office
    c. Senior Center

3. Town of Coventry
    a. Social Services
    b. Senior Center

4. Town of Ashford
    a. Social Services
    b. First Selectman Office
    c. Senior Center

5. Town of Chaplin

a. First Selectman Office
b. Senior Center

6. Hartford HealthCare
   a. Natchaug Hospital - Sachem House Adult Program
   b. Older Adult Program (Over 55) Windham Hospital
   c. Quinebaug Treatment Center

7. Access Agency - Willimantic

8. Dept. of Social Services: Willimantic Branch

9. Social Security Administration: Willimantic Branch

10. www.cthcvp.org (covers the entire state and nation)

11. Windham No Freeze Shelter

12. Connecticut Coalition Against Domestic Violence – United Services of Willimantic
    a. Dayville
    b. Willimantic
    c. Wauregan
    d. Columbia

13. Windham Regional Community Council

14. UCONN Veterans Affairs and Military Programs
    a. University of Connecticut
    b. VA Willimantic Outpatient Clinic

13. Fair Housing Poster.
    This is displayed on the bulletin board in the lobby of the MHA.

14. This Affirmative Fair Housing Marketing Plan.
    This is available at the MHA office and on its webpage.

15. Evaluation of Marketing Plan.
    a. After the creation of the waiting lists, the demographics of those applying compared to those in the expanded market area will be assessed.
    b. Specifically, the MHA will look at the number of applicants in the "least likely to apply" groups.
    c. Any determination to change the existing marketing plan would be made if, and when, there is a statistically significant change to the category of families found to be "least likely to apply."

16. Marketing Staff.

Due to the size of the program, the MHA has no marketing staff positions. As part of their other duties, the Executive Director and staff will coordinate marketing.

17. Staff Training and Assessment: AFHMP

a. All office staff was trained on December 8, 2016 by Open Community Alliances, both orally and in writing, on non-discrimination and fair housing policies.

b. The MHA will endeavor to have employees attend formal training on an annual basis, however employees continue informal training on an ongoing basis through information provided by HUD, free online educational webcasts, and reading fair housing notices submitted to professional organizations who advocate for fair housing.

c. The AFHMP will be reviewed when:

i. the Consolidated Plan as set by the State of Connecticut is updated, or

ii. there are material changes in the demographics or housing market.

18. Selection of Applicants.

a. Applicants are selected by lottery for each opening in conformance with the Mansfield Housing Authority Tenant Selection Policy as it may be amended from time to time.

b. Staff does not select applicants. Applicants are randomly chosen by lottery via a housing software program.

C. The sample calculations of the maximum rents of the intended affordable dwellsing units are as follows:

ONE BEDROOM RENTAL UNIT FOR FAMILY EARNING LESS THAN 80 PERCENT OF STATEWIDE MEDIAN INCOME	SAMPLE COMPUTATIONS BASED ON FY 2019 DATA
1. Determine lower of relevant year (2019) area median income for Hartford-West Hartford-East Hartford, CT HMFA ($97,900) or statewide median income ($100,400), adjusted for family size (family of 4), as published by HUD	$97,900
2. Determine adjusted income for a household of 1.5 persons by calculating 75 percent of Item 1	$73,425
3. Calculate 80 percent of Item 2	$58,740
4. Calculate 30 percent of Item 3, representing maximum portion of a family's income that may be used for housing	$17,622
5. Divide Item 4 by 12 to determine maximum monthly housing expense	$1,469
6. Compare HUD 2019 Fair Market Rents for Hartford-West Hartford-East Hartford, CT HMFA ($960) times 120 percent	$1,152
7. Use lesser of calculated maximum monthly expense (Item 5) and HUD fair market rent (Item 6)	$1,152
8. Determine by reasonable estimate monthly expenses for heat and utility costs, excluding television, telecommunications, and information technology services, but including any fee required for all tenants (tenant responsible for such expenses)	$125
9. Subtract reasonable monthly expenses (Item 8) from maximum housing expense (Item 7) to determine maximum amount available for rent	$1,027

ONE BEDROOM RENTAL UNIT FOR FAMILY EARNING LESS THAN 60 PERCENT OF STATEWIDE MEDIAN INCOME	SAMPLE COMPUTATIONS BASED ON FY 2019 DATA
1. Determine lower of relevant year (2019) area median income for Hartford-West Hartford-East Hartford, CT HMFA ($97,900) or statewide median income ($100,400), adjusted for family size (family of 4), as published by HUD	$97,900
2. Determine adjusted income for a household of 1.5 persons by calculating 75 percent of Item 1	$73,425
3. Calculate 60 percent of Item 2	$44,055
4. Calculate 30 percent of Item 3, representing maximum portion of a family's income that may be used for housing	$13,217
5. Divide Item 4 by 12 to determine maximum monthly housing expense	$1,101
6. Compare HUD 2019 Fair Market Rents for Hartford-West Hartford-East Hartford, CT HMFA	$960
7. Use lesser of calculated maximum monthly expense (Item 5) and HUD fair market rent (Item 6)	$960
8. Determine by reasonable estimate monthly expenses for heat and utility costs, excluding television, telecommunications, and information technology services, but including any fee required for all tenants (tenant responsible for such expenses)	$125
9. Subtract reasonable monthly expenses (Item 8) from maximum housing expense (Item 7) to determine maximum amount available for rent	$835

TWO BEDROOM RENTAL UNIT FOR FAMILY EARNING LESS THAN 80 PERCENT OF STATEWIDE MEDIAN INCOME	SAMPLE COMPUTATIONS BASED ON FY 2019 DATA
1. Determine lower of relevant year (2019) area median income for Hartford-West Hartford-East Hartford, CT HMFA ($97,900) or statewide median income ($100,400), adjusted for family size (family of 4), as published by HUD	$97,900
2. Determine adjusted income for a household of 3 persons by calculating 90 percent of Item 1	$88,110
3. Calculate 80 percent of Item 2	$70,488
4. Calculate 30 percent of Item 3, representing maximum portion of a family's income that may be used for housing	$21,146
5. Divide Item 4 by 12 to determine maximum monthly housing expense	$1,762
6. Compare HUD 2019 Fair Market Rents for Hartford-West Hartford-East Hartford, CT HMFA ($1,194) times 120 percent	$1,433
7. Use lesser of calculated maximum monthly expense (Item 5) and HUD fair market rent (Item 6)	$1,433
8. Determine by reasonable estimate monthly expenses for heat and utility costs, excluding television, telecommunications, and information technology services, but including any fee required for all tenants (tenant responsible for such expenses)	$150
9. Subtract reasonable monthly expenses (Item 8) from maximum housing expense (Item 7) to determine maximum amount available for rent	$1,283

TWO BEDROOM RENTAL UNIT FOR FAMILY EARNING LESS THAN 60 PERCENT OF STATEWIDE MEDIAN INCOME	SAMPLE COMPUTATIONS BASED ON FY 2019 DATA
1. Determine lower of relevant year (2019) area median income for Hartford-West Hartford-East Hartford, CT HMFA ($97,900) or statewide median income ($100,400), adjusted for family size (family of 4), as published by HUD	$97,900
2. Determine adjusted income for a household of 3 persons by calculating 90 percent of Item 1	$88,110
3. Calculate 60 percent of Item 2	$52,866
4. Calculate 30 percent of Item 3, representing maximum portion of a family's income that may be used for housing	$15,860
5. Divide Item 4 by 12 to determine maximum monthly housing expense	$1,322
6. Compare HUD 2019 Fair Market Rents for Hartford-West Hartford-East Hartford, CT HMFA	$1,194
7. Use lesser of calculated maximum monthly expense (Item 5) and HUD fair market rent (Item 6)	$1,194
8. Determine by reasonable estimate monthly expenses for heat and utility costs, excluding television, telecommunications, and information technology services, but including any fee required for all tenants (tenant responsible for such expenses)	$150
9. Subtract reasonable monthly expenses (Item 8) from maximum housing expense (Item 7) to determine maximum amount available for rent	$1,044

THREE BEDROOM RENTAL UNIT FOR FAMILY EARNING LESS THAN 80 PERCENT OF STATEWIDE MEDIAN INCOME	SAMPLE COMPUTATIONS BASED ON FY 2019 DATA
1. Determine lower of relevant year (2019) area median income for Hartford-West Hartford-East Hartford, CT HMFA ($97,900) or statewide median income ($100,400), adjusted for family size (family of 4), as published by HUD	$97,900
2. Determine adjusted income for a household of 4.5 persons by calculating 104 percent of Item 1	$101,816
3. Calculate 80 percent of Item 2	$81,453
4. Calculate 30 percent of Item 3, representing maximum portion of a family's income that may be used for housing	$24,436
5. Divide Item 4 by 12 to determine maximum monthly housing expense	$2,036
6. Compare HUD 2019 Fair Market Rents for Hartford-West Hartford-East Hartford, CT HMFA ($1,496) times 120 percent	$1,795
7. Use lesser of calculated maximum monthly expense (Item 5) and HUD fair market rent (Item 6)	$1,795
8. Determine by reasonable estimate monthly expenses for heat and utility costs, excluding television, telecommunications, and information technology services, but including any fee required for all tenants (tenant responsible for such expenses)	$150
9. Subtract reasonable monthly expenses (Item 8) from maximum housing expense (Item 7) to determine maximum amount available for rent	$1,645

THREE BEDROOM RENTAL UNIT FOR FAMILY EARNING LESS THAN 60 PERCENT OF STATEWIDE MEDIAN INCOME	SAMPLE COMPUTATIONS BASED ON FY 2019 DATA
1. Determine lower of relevant year (2019) area median income for Hartford-West Hartford-East Hartford, CT HMFA ($97,900) or statewide median income ($100,400), adjusted for family size (family of 4), as published by HUD	$97,900
2. Determine adjusted income for a household of 4.5 persons by calculating 104 percent of Item 1	$101,816
3. Calculate 60 percent of Item 2	$61,090
4. Calculate 30 percent of Item 3, representing maximum portion of a family's income that may be used for housing	$18,327
5. Divide Item 4 by 12 to determine maximum monthly housing expense	$1,527
6. Compare HUD 2019 Fair Market Rents for Hartford-West Hartford-East Hartford, CT HMFA	$1,496
7. Use lesser of calculated maximum monthly expense (Item 5) and HUD fair market rent (Item 6)	$1,496
8. Determine by reasonable estimate monthly expenses for heat and utility costs, excluding television, telecommunications, and information technology services, but including any fee required for all tenants (tenant responsible for such expenses)	$150
9. Subtract reasonable monthly expenses (Item 8) from maximum housing expense (Item 7) to determine maximum amount available for rent	$1,346

D. All units will be constructed and offered for lease concurrently. The initial location, design and features of the income-restricted housing units are set forth in Schedule C.

E. a. Restrictive Covenants - Affordability Period.

The SER-HO units shall be designated as affordable for the period set forth in state law. The affordability period shall be calculated separately for each SER-HO unit, and the period shall begin on the date of initial rental of such SER-HO unit to an eligible tenant household.

b. Lease Provisions governing affordable dwelling units

i. Principal Residence.

SER-HO units shall be occupied only as a tenant's principal residence. Subleasing of SER-HO units shall be prohibited.

ii. Requirement to Maintain Condition.

All tenants are required to maintain their units. The tenant shall not destroy, damage or impair the unit, allow the unit to deteriorate, or commit waste on the unit. When a SER-HO unit is offered for re-rental, the Administrator may cause the unit to be inspected.

iii. Affordable apartment home is subject to income limitions:

This apartment home is an affordable housing unit and is therefore subject to a limitation at the date of leasing and occupancy on the maximum annual income of the household that may occupy the apartment home, and is subject to a limitation on the maximum monthly rent. These limitations shall be strictly enforced.

2. General

a. Calculation of the maximum monthly payment for affordable apartment homes, so as to satisfy C.G.S. § 8-30g, shall utilize the median income data as published by the U.S. Department of Housing and Urban Development in effect on the day a lease is executed.

b. The maximum monthly payment that the tenant of an affordable apartment home shall pay shall not be greater than the amount that will preserve such unit as defined in C.G.S. § 8-30g.

c. The affordability period shall be calculated separately for each affordable apartment home in the Community, and the period shall begin on the date, as stated in the lease, of occupancy of the affordable apartment home. The designation of an affordable unit

may change over time due to an affordability tenant becoming ineligible and for other reasons in compliance with fair housing requirements.

d. In the event a tenant who occupies an affordable apartment home becomes ineligible due to an increase in income, the next available apartment in the Community would become an affordable apartment home. A temporary lapse in compliance with affordability requirements shall not result in a forfeiture or reversion of title, but the Commission or its designated agent shall otherwise retain all enforcement powers granted by the Connecticut General Statutes, including the authority under C.G.S. § 8-12 to issue notices of violation, to impose fines, and to seek injunctive relief.

3. Enforcement.

A violation of this Affordability Plan shall not result in a forfeiture of title, but the Mansfield Planning and Zoning Commission or its designated agent shall otherwise retain all enforcement powers granted by the Connecticut General Statutes, including § 8-12, which powers include, but are not limited to, the authority, at any reasonable time, to inspect the property and to examine the books and records of the Administrator to determine compliance of SER-HO units with the affordable housing regulations.

4. Binding Effect.

This Affordability Plan shall be binding on the successors and assigns of the Developer and may be amended as set forth within.

SCHEDULE A

PROPERTY DESCRIPTION

A certain piece or parcel of land situated in the Town of Mansfield, County of Tolland and State of Connecticut, and shown on a map or plan entitled, "PROPERTY/BOUNDARY SURVEY PREPARED FOR MANSFIELD NON-PROFIT HOUSING DEVELOPMENT CORP. 113-121 SOUTH EAGLEVILLE ROAD STORRS, CONNECTICUT Drawing date: June 27, 2016 Drawing Scale: 1" = 40'," prepared by Lenard Engineering, Inc., 2210 Main Street, Glastonbury, Connecticut. Said parcel is more particularly bounded and described as follows:

Beginning at a point on the easterly side of South Eagleville Road (Rt. #275), which point is the northeasterly corner of now or formerly Connecticut Natural Gas Corporation and the northwesterly corner of the property herein described, said point being the POINT OF BEGINNING;

thence N 48° 09' 39" E, along South Eagleville Road a distance of 50.17 feet;

thence N 51° 43' 39" E., along South Eagleville Road a distance of 292.42 feet;

thence N 58° 34' 39" E, along South Eagleville Road a distance of 65.70 feet;

thence N 53° 21' 59" E, along South Eagleville Road a distance of 234.96 feet;

thence N 53° 21' 59" E, along South Eagleville Road a distance of 61.13 feet;

thence S 46° 13' 11" E, along land now or formerly Storrs Acquisition LLC a distance of 320.15 feet;

thence S 53° 52' 25" W, along land now or formerly N/F Storrs Acquisition LLC a distance of 743.71 feet;

thence N 39° 10' 34" W, along land now or formerly Connecticut Natural Gas Corporation a distance of 302.45 feet to the POINT OF BEGINNING.

SCHEDULE B

dorgan architecture & planning

10 Eastwood Road, Storrs, CT 06268 01.518.469.6464 Registered Architect NCARB

Draft Outline Specifications Eagleville Green 11/2/19

Please note that all units will be constructed to the same standard.

Structure

- Reinforced concrete footings set on gravel over undisturbed soil.
- Concrete slab on grade
- Wood frame

Building Envelope

- Energy Star Rated Windows
- Continuous air barrier including high performance caulking
- Continuous moisture barrier
- Architectural roof shingle (25 year)
- Insulation to exceed code requirements
- Fiber cement siding

Interior

- Water Saver Rated plumbing fixtures
- Energy Star Rated appliances
- North America sourced gypsum wallboard
- Cement board in bathrooms
- Low VOC caulk
- Low VOC paint
- Low VOC mastic
- Washer dryer connections
- Solid surface countertops
- Energy Star Rated mechanical equipment
- Energy Star Rated ventilation equipment
- Smoke and CO2 detectors
- Durable cabinets and flooring

Site

- Night sky protective lighting
- Native and natively adapted plantings
- Private outdoor patio or deck for all units
- Asphalt paving

SCHEDULE C

LOCATION, DESIGN AND FEATURES OF INCOME-RESTRICTED HOUSING UNITS

Low-income, affordable and workforce housing units in the Community shall:

a. Be situated within the Community so as not to be in less desirable locations than market-rate units, and shall, on average, be no less accessible to public amenities, such as open space and recreational facilities, than the market rate units.

b. Be integrated with the rest of the Community and be compatible in size, number of bedrooms, design, appearance, exterior features, construction, and quality of materials to the market rate units. Interior features and mechanical systems shall conform to the same specifications as market rate units.

c. Use building materials that have a compatible exterior style to other units in the Community.

d. Be ready for occupancy no later than the date of the initial occupancy of the market-rate portion of the Community. If the project is developed in phases, the affordable residential units shall be developed in proportion to the phases.

As set forth in the approved site plan on file with the Commission, the affordable and market-rate units will all be comparable in terms of construction, amenities and bedroom sizes. The following will be the initially-designated affordable units. The unit designation may change due to the needs or preferences of the resident households or other reasons compliant with fair housing requirements.

EAGLEVILLE GREEN
AFFORDABLE HOUSING
UNITS

UNIT TYPE	UNIT QUANTITY		AFFORDABLE UNITS			MARKET UNITS
	#	Subtotal	60%	80%	Total	
1 BEDROOM - Type #1	6		1	2		3
1 BEDROOM - Type #2	8		2	1		5
1 BEDROOM - Type #3	1					1
1 BEDROOM - Type #4	1					1
1 BEDROOM - Accessible	2					2
TOTAL 1 BEDROOM UNITS		**18**	**3**	**3**	**6**	**12**
2 BEDROOM - Type #1	12		2	2		8
2 BEDROOM - Type #2 (Accessible)	2					2
2 BEDROOM - Type #3	2		1			1
2 BEDROOM - Existing Building	1					1
TOTAL 2 BEDROOM UNITS		**17**	**3**	**2**	**5**	**12**
3 BEDROOM - Type #1	6		1	1		4
3 BEDROOM - Type #2 (Accessible)	1					1
TOTAL 3 BEDROOM UNITS		**7**	**1**	**1**	**2**	**5**
TOTAL UNITS		**42**	**7**	**6**	**13**	**29**
PERCENTAGE oF TOTAL UNITS					31%	69%

LEGEND
1 BED
2 BED
3 BED
SUPPORT
(A) = ACCESSIBLE GROUND FLOOR UNIT
(60%) = 60% OF MEDIAN INCOME AFFORDABLE UNIT
(80%) = 80% OF MEDIAN INCOME AFFORDABLE UNIT
ACCESSIBLE & 1 BED UNITS ARE 1 STORY/ STACKED. ALL OTHER UNITS ARE 2 STORIES

MANSFIELD
CONNECTICUT

Town of Mansfield
Department of Planning and Development

MEMO

To: Mansfield Nonprofit Housing Development Corporation
(c/o Agents Kathy Dorgan and Robert Newton)

CC: Jennifer Kaufman; Derek Dilaj; Adam Libros, Chuck Eaton (CME)

From: Linda Painter, AICP, Director

Date: December 13, 2019

Subject: P1364-2 Eagleville Green Site Plan Application
Preliminary Review Comments-Set #1
Plan Set Prepared by BSC Group dated November 25, 2019

OVERVIEW

The following comments are based on staff review of plans dated November 25, 2019 for Eagleville Green. They do not include peer review comments that are being prepared by CME on behalf of the Planning and Zoning Commission. These comments are organized and based on the Site Plan approval criteria identified in Article 5, Section A.5 of the Mansfield Zoning Regulations.

Please provide a revised plan set and response to comments by Friday, January 3, 2019 to allow staff and CME time to review the plan revisions prior to the public hearing currently scheduled for January 21, 2019.

Disclaimers

1. These comments are provided as a courtesy. It is the applicant's responsibility to ensure that the submitted plans comply with current regulations. In any revision process, it is possible that addressing one comment will have impacts on compliance with another regulation. The applicant is responsible for reviewing revised plans prior to submittal to ensure that any domino effects from one correction are caught and addressed prior to resubmittal.

2. While staff has attempted to identify every potential issue to be addressed, we may miss something or identify additional comments upon review of the revised plans.

3. These comments have been provided with the understanding that pursuant to Sec. 8-30g(g), C.G.S., the burden is on the Planning and Zoning Commission to prove that their ultimate decision is:

   - Necessary to protect substantial public interests in health, safety or other matters which the commission may legally consider
   - Such public interests clearly outweigh the need for affordable housing; and
   - Such public interests cannot be protected by reasonable changes to the affordable housing development.

COMPLETENESS OF APPLICATION

Relevant Approval Criterion ▪ Article 5, Section A.5.a

All required or necessary information has been provided by the applicant so that compliance with applicable regulations can be determined.

Recommendation: Where requested in these comments, please provide additional information.

COMPLIANCE WITH REGULATIONS

Relevant Approval Criterion ▪ Article 5, Section A.5.b

The proposal complies with all other applicable sections of the Zoning Regulations including but not limited to: parking and loading; landscaping and buffering; aquifer areas; prohibited uses, performance standards; architectural and design standards; height and area requirements; signs, bonding, filling, grading, excavation, removal, processing of soil, stone, sand and gravel, peat moss, and other similar materials regulations and any special provisions applying to the subject use.

The applicant has submitted Site and Architectural Plans along with the required Site Plan checklist.

Comment: See the attached table that identifies revisions that are needed to comply with specific requirements of the Zoning Regulations.

Recommendation: Revise plans and associated documentation as described in the attached table and resubmit by January 6, 2020.

OTHER STATE AND LOCAL REQUIREMENTS

Relevant Approval Criterion ▪ Article 5, Section A.5.c

The application has considered all other applicable local, state and federal requirements, including subdivision approval and necessary permits from the Mansfield Inland Wetlands Agency, the Mansfield Water Pollution Control Authority, the Mansfield Fire Marshal, the Mansfield Historic District Commission and the state Departments of Health, Environmental Protection and Transportation. For applications involving concurrent Inland Wetland Agency (IWA) license applications, no decision shall be made until the IWA has submitted a report with its final decision.

Comment: The following summary identifies the need for other state and local permits based on the information submitted.

Recommendation: Unless otherwise noted, no Zoning Permit shall be issued for the development until all of the required state and local permits have been obtained pursuant to Article 11, Section 3.c.

Subdivision Approval

No subdivision approval is needed for this application.

Inland Wetlands License

A concurrent application was submitted to the Inland Wetlands Agency. The public hearing is scheduled for January 21, 2020. No decision on the site plan application shall be made until the IWA has submitted a report with its final decision.

Mansfield Water Pollution Control Authority

Comment. The connection for the proposed development is shown to the Town of Mansfield's Wastewater Collection System. The Applicant shall complete a Sewer Permit with the Town of Mansfield for consideration by the Town of Mansfield Water Pollution Control Authority (WPCA). As of December 23, 2019, the WPCA has adequate capacity within the Sewer Service Agreement by and between Town of Mansfield and University of Connecticut for the proposed 42 unit multi-family residential project. The proposed plans will require further detail for consideration as part of the Sewer Permit. This detail will include pump sizing, operating levels, community sewer service agreement, and potential impact statement concerning the downstream pumping station.

Mansfield Fire Marshal

While the Fire Marshal has not yet provided formal comments, this memo addresses suggestions from the Fire Marshal and Fire Chief identified during a preliminary plan review meeting of Town staff.

Mansfield Historic District Commission

The subject property is not located within a local Historic District; therefore, no review or approval from the Mansfield Historic District Commission is needed.

Connecticut Department of Public Health (DPH)

Provided the development is served by public water (CWC) as proposed, no approval is needed from CTDPH.

Connecticut Department of Energy and Environmental Protection (CTDEEP)

Provided the development is served by public sanitary sewers as proposed, no approval from CTDEEP will be needed for the wastewater disposal system.

See comments from CME with regard to whether an Army Corps of Engineers permit is required.

Connecticut Department of Transportation (CTDOT)

As described in the Traffic Summary prepared by BSC dated November 25, 2019, encroachment and driveway permits will be needed from CTDOT prior to construction.

Comment: Refer to the section of this memo titled "Vehicular and Pedestrian Access" for additional comments and recommendations regarding proposed ingress/egress circulation.

INFRASTRUCTURE, PUBLIC SAFETY AND PROTECTION OF NATURAL AND CULTURAL RESOURCES

Relevant Approval Criterion ▪ Article 5, Section A.5.d

The proposal has made safe and suitable provisions for water supply, waste disposal, flood control, fire and police protection, the protection of the natural environment, including air quality and surface and groundwater quality and the protection of existing aquifers and existing and potential public water supplies, cemeteries, historic structures and other features of historic value.

For all properties within one of the ten (10) historic village areas identified in Article X, Section J, the special historic village area review criteria contained in Article X, Section J.2 also shall be complied with

Potable Water

The applicant has provided an April 3, 2019 letter from Connecticut Water Company indicating that domestic water and fire protection water service is available from the 8" main in South Eagleville Road. The letter notes that an engineered main extension may be required. Furthermore, the letter indicates that should a Customer Agreement for service not be executed within one year of the letter, CWC reserves the right to reevaluate its ability to service the project.

Comments:

(1) Pursuant to the January 21, 2014 Water Supply Definitive Agreement and the subsequent a Memorandum of Agreement between the Town and Connecticut Water Company, main extensions and any connection to the CWC system that requires a change in zoning or approval by a local land use commission must be referred to the Water System Advisory Committee for review and comment. **This application was referred to the WSAC on December 3, 2019. A special meeting of the committee is scheduled for January 8, 2020.**

(2) Please identify the proposed main extension on the plans.

Recommendations:

(1) The applicant is encouraged to attend the special meeting of the WSAC to explain the project and answer questions.

(2) Approval of the site plan should be contingent upon execution of a Customer Agreement for Service as well as the required permits for any main extension prior to issuance of a Zoning Permit for the development to ensure that potable water service will be available for the development.

Wastewater

See Mansfield Water Pollution Control Authority.

Solid Waste/Recycling

Comments: The Town's recycling coordinator has reviewed the proposal and provided the following recommendations with regard to dumpster and recycling enclosure sizing:

- The gate opening should be at least 18 feet to accommodate both trash and recycling dumpsters, both of which measure just under 7 feet across. This will allow for clearance around each dumpster for both users and the truck.
- The depth of the dumpster pad/enclosure will depend on size. She has provided two specification sheets with dumpster dimensions for use by the designer. Based on the proposed size of the development, she recommended an 8 cubic yard dumpster and a 4 cubic yard recycle dumpster.

Recommendations: Revise the site layout plan and specifications to provide a solid waste enclosure that meets the minimum dimensional requirements outlined in the above comments and per the attached specifications. Additionally, the fence specification for the enclosure should be revised to require a minimum height at least 1 foot taller than the dumpster containers.

Flood Control

The subject property is not located within a flood hazard area.

Fire and Police Protection

Comments. Based on a preliminary review of the site plan, the Fire Department has requested that the two hydrant locations be moved closer to South Eagleville Road next to each entrance driveway, approximately 25 feet from each property line. Additionally, confirmation is needed that the proposed layout meets the accessibility needs of a ladder truck (see attached specifications).

Depending on the type of building construction proposed, a separate water service line to each building may be required for fire protection.

Recommendations.

(1) Revise site layout and utility plan to relocate hydrants pursuant to the above comments.

(2) Provide vehicle turning movements demonstrating that the site is accessible via ladder truck.

Protection of Natural Resources

See comments and recommendations provided by CME and Jennifer Kaufman with regard to the associated wetlands application.

Historic Structures and Features

There are two small remnants of stone walls on the property in the area of disturbance.

Recommendations: Add a note requiring the stones from the walls to be retained and reused on site in another location as part of the overall site landscaping.

VEHICULAR AND PEDESTRIAN ACCESS

Relevant Approval Criterion ▪ Article 5, Section A.5.e

Vehicular and pedestrian access to the property and egress from the property and internal vehicular and pedestrian traffic patterns are safe and suitable and have been designed to maximize safety and avoid hazards and congestion. Adequate provisions have been made to address accessibility problems of handicapped individuals. All curb cuts shall have adequate sightlines and adjacent streets shall have adequate capacity to safely accommodate the traffic flows associated with the proposed use(s). As deemed necessary, offsite road and drainage improvements may be required by the Commission;

Sidewalks, bikeways, trails and/or other improvements designed to encourage and enhance safe pedestrian and bicycle use shall be required, unless specifically waived by a three-quarter (3/4) vote of the entire Commission (7 votes), for all sites within or proximate to Plan of Conservation and Development designated "Planned Development Areas"; proximate to schools, playgrounds, parks and other public facilities; or proximate to existing or planned walkway, bicycle or trail routes. In evaluating any waiver request, the Commission shall consider the size and the location of the proposed development, its relationship to existing or planned development, school sites, playground areas and other public areas and the location and nature of existing or planned sidewalk, bikeway or trail improvements.

Safe Vehicular and Pedestrian Access

The site layout plan proposes a second full-access curbcut to South Eagleville Road. As South Eagleville is a state road, the ultimate decision with regard to whether to authorize a second curb cut lies with the CTDOT.

Comment. In the vicinity of the proposed project, CTDOT has identified the need for a signal at the intersection of Separatist Road and South Eagleville Road. As such, recent data for the 85th percentile is available. The Applicant's traffic review investigated the Intersection Sight Distance based upon a Design Speed of 30 mph which is also the speed limit.

Recommendations.

(1) **Speed Study.** Conduct or obtain 85th percentile speed data to confirm adequacy of the Intersection and Stopping Sight Distances to demonstrate that a second access can be safely installed in the proposed location.

(2) **Plan Modification.** If the CTDOT does not approve a second access, revisions to the site plan shall require additional PZC review as the current design does not provide for closing one of the driveways without impacting accessibility for large vehicles including fire trucks and garbage trucks. As designed, with one curb-cut removed, there is not sufficient area for large vehicles to turn around within the development to exit. Backing up into South Eagleville Road would create significant safety problems due to the volume and speed of traffic in the area as well as potential impacts on accessibility for emergency vehicles.

Accessibility for Persons with Disabilities

Comment: All sidewalks require ADA ramps where meeting the parking lot or a driving aisle.

Recommendation: Revise plans and specifications to include ADA ramps for all sidewalks as well as striped crossings between ramps. See attached table for additional corrections with regard to ADA parking space/access aisle locations.

Roadway Capacity and Anticipated Impacts

The applicant has provided a traffic summary statement prepared by BSC Group and dated November 25, 2019. The summary provides a narrative overview of the development, including proposed ingress/egress, on-site circulation and parking. It also notes that the project does not qualify as a Major Traffic Generator based on its size.

Comment: The traffic summary does not include any information regarding current traffic volumes or levels of service for Route 275, nor does it include any information regarding projected trip generation for the project.

Recommendation: Update the traffic summary statement to address existing traffic volumes, levels of service and projected trip generation rates for the project as well as any potential impacts the project may have on traffic flow on Route 275.

It should be noted that the CTDOT Division of Traffic Engineering recently completed a review of the intersection of Route 275 and Maple Road, including traffic counts, roadway characteristics and crash history. Based on their findings, a traffic signal will be installed at that intersection with construction of the signal estimated to start in spring 2023.

Sidewalks, Bikeways and Trails

There is currently a sidewalk extending along the frontage of the subject property.

Comment: The existing walkway will need to be repaired/replaced to its current condition if impacted by site work and/or associated utility construction. The construction entrance is proposed over the existing walkway preventing wheelchairs or other assistive devices from traveling along it during construction.

Recommendation: The Applicant shall make the walkway available to all users during construction.

OFF-STREET PARKING AND LOADING, GRADING AND DRAINAGE

Relevant Approval Criterion ▪ Article 5, Section A.5.f

Off-street parking and loading, storm drainage improvements and grading plans are adequate, having been designed to promote vehicular and pedestrian safety and to prevent flooding, storm drainage and sediment and erosion problems. All required easements have been obtained by the applicant.

Off-Street Parking and Loading

The site layout plan indicates that there will be a total of 87 parking spaces provided for the development; however, the stormwater management plan indicates a total of 81 spaces.

Recommendations:

(1) Clarify the correct number of spaces

(2) See attached table for specific comments regarding design of ADA spaces

Grading

See comments in attached table regarding information needed on filling and grading.

Drainage/Stormwater Management

Drainage Easement

The applicant has provided an executed copy of a drainage easement authorizing them to construct drainage improvements and a right to drain within a designated area depicted on the site plan (to be further described in a legal description). The applicant is also authorized to use this area for construction and maintenance of buildings and improvements along the southerly boundary of the subject property. These rights are contingent upon the Planning and Zoning Commission confirming as part of its site plan approval that designated easement area can still be counted as open space as part of any development application for the abutting property.

Comment. This is an issue that will need to be resolved by the Planning and Zoning Commission as part of its review.

Recommendation. To assist the Commission in its review, the applicant is encouraged to provide photographs of similar installations or appropriately rendered landscape plans.

Stormwater Management Plan

See comments from CME with regard to the proposed stormwater management plan, compliance with Article 6, Section B.4.t as well as the Town's MS-4 permit.

Recommendation. Revise plans as needed to address CME comments and comply with MS-4 requirements.

MITIGATION OF POTENTIAL NUISANCES

Relevant Approval Criterion ▪ Article 5, Section A.5.g

The proposal has adequately considered all potential nuisances such as noise and outdoor lighting. Except where specifically authorized by these Regulations, all lighting shall be the minimum necessary to address safety and security needs taking into account manufacturer's installation charts and spacing recommendations for the proposed lighting. All lighting fixtures shall be designed to prevent undesirable illumination or glare above the site or beyond the site's

property lines. All lighting fixtures shall be shielded and aimed downward unless it can be demonstrated that alternative designs will not result in spill light (undesirable light that falls outside the area of intended illumination).

Noise

As a residential development, significant noise impacts are not anticipated. The property is subject to the Town's Noise ordinance, Chapter 134 of the Code of Ordinances.

Outdoor Lighting

The applicant has proposed use of shielded lighting to reduce light spill.

Comment. See the attached table for specific comments with regard to outdoor lighting.

Recommendation. Revise plan and specifications per attached comments.

ENERGY CONSERVATION

Relevant Approval Criterion ▪ Article 5, Section A.5.h

Passive solar and energy conservation techniques have been considered in the design of structures, structure orientation, street and lot layout, placement of vegetation, use of natural and manmade topographical features and protection of solar access within a development.

Comment. While not specifically referenced in the application, the architectural plans appear to include rooftop solar installations for 5 of the 7 buildings.

Recommendation. Please provide additional information with regard to techniques used to promote passive solar and energy conservation.

CONSTRUCTION TRAFFIC

Relevant Approval Criterion ▪ Article 5, Section A.5.i

The proposal has adequately considered construction traffic and potential onsite and offsite vehicular and pedestrian safety problems, potential neighborhood impact problems and potential road and property damage that could occur due to the nature and timing of proposed construction activity.

Comment. No specific information on construction traffic or timing has been submitted as part of the site plan.

See above comment concerning sidewalks, etc.

Recommendation. Please provide information with regard to construction traffic management.

UNDERGROUND UTILITIES

Relevant Approval Criterion ▪ Article 5, Section A.5.j

Unless specifically waived by the Commission due to site and environmental constraints or adverse impacts to stonewalls or other historic features, existing significant trees or other natural or manmade features, all new wired utility lines (telephone, electric, cable, etc.) shall be installed underground within suitable conduits. For significant land use projects, the Commission also may require existing overhead utility lines to be replaced with underground lines.

The site plan identifies an overhead connection from an existing utility pole on the opposite side of South Eagleville Road to a new utility pole on the subject site. Individual service connections

for new buildings will be installed underground; the existing building to remain will continue to be served by an overhead connection.

Comment. While it is strongly encouraged that the transition to underground utilities occur on the other side of South Eagleville Road and that the connection to the site be made underground, it is understood that such a connection could come at great expense and potentially impact the overall affordability of the development.

Recommendations. While the applicant is encouraged to pursue an underground connection and changing the service for the existing building to underground lines, staff recommends that the Commission not require such modifications due to the project's status as an 8-30g application and the fact that the use of overhead utilities does not rise to the level of a significant public health and safety concern.

ARCHITECTURAL DESIGN STANDARDS

Relevant Approval Criterion ▪ Article 5, Section A.5.k

The basic design of the proposed uses, buildings or development; the relationship between the buildings and the land; the relationships between uses and between buildings or structures; and the overall physical appearance of the proposed use, building or development; comply with all applicable architectural and design standards of Article X, Section R, are in general harmony with the character of the surrounding neighborhood and will not serve to blight or detract from the value of abutting residences or other property.

Comment. See specific comments and recommendations in attached table.

Recommendations. While the applicant is encouraged to consider the comments provided, staff will recommend to the Commission that such comments not be considered requirements due to the project's status as an 8-30g application and the fact that such design considerations do not rise to the level of a significant public health or safety concern.

AFFORDABLE HOUSING PLAN

Draft Affordability Plan

The note at the beginning of the Affordability Plan states that the Plan is in draft form due to changes in income data from year to year as well as the fact that the developer has not yet secured the principal financing that will qualify the project as "assisted housing" pursuant to Sec. 8-30g(a)(3), C.G.S. Accordingly, the provisions of Article 10, Section W.8 related to provision of deed restrictions do not apply. Should this development change from assisted housing to a set-aside development pursuant to Sec. 8-30g, a revised affordablility plan will need to be submitted and approved by the Commission.

Comment: See CME's comments on the affordable housing plan

Recommendations. Revise affordable housing plan per CME's comments.

Comment: The sample calculations for establishing maximum rent (Section IX) as well as calculation of maximum income (Sections V and VII, Schedule D) address the ways in which updated annual income data will be used to determine tenant eligibility and maximum rent. The definition of Community and Schedule C identify the number and type of income-restricted units based on the assumption that 30% of units will be affordable. If the financing product results in changes to the percentage, number and type of income-restricted units, these sections should be updated accordingly.

Recommendations:
1. Introductory Note. Delete the second sentence of the Introductory Note and replace with the following:
"The Affordability Plan will be updated once financing is secured to revise the following information in accordance with the specific requirements of the lending program: tenant selection, application, income verification, annual recertification procedures, and number and type of affordable units (by income level). The revised Affordability Plan and a summary of changes shall be submitted for the Commission's records within 30 days of completion."

2. Plan Revisions. Add a section on Affordability Plan Revisions (suggested Article XII, renumbering existing Articles XII and XIII. This Section should identify when plan revisions are required (i.e. if the financing requirements change); and the types of changes to the Affordability Plan that would require PZC approval (i.e. any change that reduces the number of affordable units/income requirements below that which was approved by the Commission; change from assisted housing to set-aside development, etc.) Changes that are needed to comply with financing requirements should be submitted for records but may not need Commission approval.

Affirmative Fair Housing Marketing Plan

Pursuant to Sec. 8-30g(b)(1)(B), C.G.S., the affordability plan required as part of the affordable housing application must include "an affirmative fair housing marketing plan governing the sale or rental of all dwelling units." The minimum standards for compliance with this requirement are further established in Section 8-30g-7 of the Regulations of Connecticut State Agencies:

> "(3) With respect to an affirmative fair housing marketing plan filed in accordance with an affordable housing development application, the provisions of sections 8-37ee-1 et seq. of the Regulations of Connecticut State Agencies, and particularly sections 8-37ee-301 and 302, shall serve as the basis for such plan, provided that such regulations, including the procedures therein, shall be guidelines, not requirements. Collection and dissemination of information about available price restricted and market rate dwelling units shall include, at a minimum:
>
> (A) Analyzing census and other data to identify racial and ethnic groups least represented in the population;
>
> (B) Announcements/advertisements in publications and other media that will reach minority populations;
>
> (C) Announcements to social service agencies and other community contacts serving low-income minority families in the region (including churches, civil rights organizations, housing authorities, and legal services organizations);
>
> (D) Assistance to minority applicants in processing applications;
>
> (E) Marketing efforts in geographic area of high minority concentrations within the housing market area;
>
> (F) Beginning marketing efforts prior to general marketing of units, and repeating again during initial marketing, at fifty percent (50%) completion, and thereafter at reasonable period intervals with respect to resales or re-rentals; and
>
> (G) Collection of basic racial and ethnic information for all residents and persons on the wait list for the development.

Comment: The Affirmative Fair Housing Marketing Plan provided in Section VI of the Affordability Plan does not address the minimum requirements established in the Regulations of State Agencies and therefore does not meet the requirement that an Affirmative Fair Housing Marketing Plan be submitted with the application in accordance with Sec. 8-30g(b)(1)(B) C.G.S.

Recommendation: Prepare and submit an Affirmative Housing Marketing Plan that complies with the provisions outlined in Section 8-30g-7 of the Regulations of Connecticut State Agencies.

OVERVIEW

All Article, Section, and Page Numbers refer to the November 1, 2019 Zoning Regulations of the Town of Mansfield, which can be accessed at http://www.mansfieldct.gov/DocumentCenter/View/4570/Zoning-Regulations, with the exception of regulations to the SER-HO District. The SER-HO regulations are expected to be adopted on December 16, 2019 and become effective on January 1, 2020. Excerpts of applicable regulations are provided in the green rows in *italics.* Staff comments relevant to that regulation are in the white rows beneath with bullets.

ARTICLE NUMBER	SECTION NUMBER	PAGE NUMBER	REGULATION/COMMENT
5	A.3.a	5.2	**A completed application form, including fee payment:** Said application must be signed by the owner of the subject property or by an individual with a legally binding contract to purchase the subject property.
			Need signed copy of site plan checklist; also need to check off whether approval block requirements were met on the checklist.
5	A.3.c	5.2	**Notification of Abutting Property Owners:** The applicant shall be responsible for notifying all property owners abutting the site of a proposed use or activity requiring site plan approval, including property owners across the street from a subject site (as measured at right angles to straight street lines and radial to curved street lines). Said notification, which shall be sent by Certified Mail, within seven (7) days of the Commission's receipt of the application, shall include the applicant's Statement of Use and mapping that depicts areas of proposed activity. The notice also shall reference the fact that the complete application is available for review in the Mansfield Planning Office. Notification forms available in the Mansfield Planning Office shall be utilized for notifying abutting property owners.
			Copies of notice, attachments and proof of mailing shall be submitted prior to the opening of the public hearing.
5	A.3.d	5.2	**Site Plan Requirements**
			• *Label proposed drainage easement on plans* • *Provide specifications for dumpster enclosure (see staff memo and attachments for additional information)* • *Change reference to "hay bale" on Sheet C-60.0 to "straw bale"*
5	A.3.e	5.4	**Sanitation Report:** The application shall submit a written sanitation report, with information on site characteristics and the proposed sanitary systems, including water supply and waste disposal. As necessary said report shall be prepared by the applicant's registered professional engineer or registered sanitarian. The report shall demonstrate that the subject sanitary systems will comply with state and local Health Department requirements and all other applicable regulations including the Town's Sand and Gravel Regulations. Where a separate permit to fill a site is necessary, said permit shall be obtained and the fill shall be placed prior to the submission of a site plan application for the subject use or development project. Necessary onsite testing must be coordinated with the Town Health Officer.

			As the site will be served by public water and sewer, the requirements of the sanitation report can be met by updating the Statement of Use to describe the proposed water and sewer connections.
5	A.3.g	5.4	**Other information:** Dependent on the nature of the proposal, the Commission shall have the right to require additional detailed information if it finds the information is necessary to review the application and determine compliance with applicable regulations and performance standards. Such information may include but shall not be limited to: traffic impact analysis, including specific information on how construction traffic will be regulated, routed and monitored; aquifer, watershed and flooding data; drainage calculations and documentation of necessary drainage rights or easements; environmental and neighborhood impact analysis; erosion and sedimentation control plans, future plans for adjacent land under the control of the subject applicant or owner; information on homeowner or property-owner associations; maintenance provisions; estimates of site improvements costs, and bonding agreements.
			See comments in staff memo and from CME with regard to traffic statement.
6	B.4.n	6.5	**Energy Considerations -** Where Planning and Zoning Commission approval is required for a land use activity, applicants shall demonstrate to the Commission that their pending proposal has considered, to the degree physically and economically possible, the utilization of the physical environment and natural energy sources, such as solar orientation, to help heat, cool or illuminate the proposed use and accordingly minimize a dependence on fossil fuels and mechanical equipment. Potential impacts on neighboring properties shall also be evaluated. Factors to be considered include: roadway, lot and building orientation, natural and manmade topographic features, soil and subsoil characteristics, existing and proposed vegetative cover, and shadow patterns on neighboring properties. Wherever feasible: • building orientation and design should maximize south facing walls; • an east-west orientation should be considered for streets and private access roads; • building height and bulk and landscaping improvements should minimize shadow patterns on adjacent properties; and • walls and accessory structures should be located in areas that will not diminish south wall exposure.
			Update Statement of Use to describe measures taken to address the energy consideration requirements
6	B.4.o	6.5	**Parking and Loading Areas** - Adequately sized, constructed and located onsite parking areas shall be provided for all land use activities so that the use of adjacent roadways is not obstructed. Where required, on-site loading areas which do not conflict with parking areas or circulation ways shall be provided. See Article X, Section D for more specific requirements. In addition, state standards for fire access and handicapped parking shall be incorporated into all parking and loading designs.
			See comments in memo with regard to fire/emergency vehicle access and turning radius for ladder trucks.
6	B.4.p	6.5	**Road and Drainage Standards** - All road and drainage improvements, including private roads, driveways and parking and loading areas, must be designed and constructed to promote vehicular and pedestrian safety and the proper discharge of storm water run off. Appropriate separation of pedestrian and vehicular traffic and adequate sightlines for all intersections, including those within a private parking or loading areas, must be incorporated into development plans. All road and drainage improvements, with the possible exception of roadway width, should conform with the standards and specifications of the Mansfield Public Works

			Department (available in the Mansfield Engineering Office). As appropriate, peak storm water discharges should be retained on site to minimize or prevent downstream impacts.
			See comments in staff memo and from CME with regard to proposed second curbcut and stormwater management.
6	B.4.q	6.5	**Landscaping and Buffering** **1. General** - All land use activities and particularly structures, parking areas and outdoor storage areas associated with commercial, industrial, or multi-family residence uses, shall include strategically placed landscape and buffer areas, which shall be designed to protect and preserve property values; to provide privacy from visual intrusion, light, dirt and noise; to prevent the erosion of soil and to provide water recharge areas; to promote pedestrian and vehicular safety; and to enhance the environmental quality and attractiveness of Mansfield. Except where alternative uses, such as parking areas, are provided for in other sections of these regulations, all required setback areas shall either be attractively landscaped with lawns trees and shrubs or, where appropriate, left in a sightly and well kept natural state. Landscape plans submitted in conjunction with a land use application shall identify, by type, size, height and placement, all proposed landscaping and all existing landscape features to be retained. Plants identified in the current State Department of Environmental Protection Agency listing of invasive species shall not be used. All submitted landscape plans must be adequate to meet the intended aesthetic, buffer and environmental purposes. Particular attention should be given to parking and loading areas, outside storage areas and shadow patterns with respect to south wall and rooftop solar access. See Article X, Section D.18 for supplemental interior parking lot landscaping requirements and Article X, Section R for architectural and design standards. **2. Landscape Buffer -** The Commission shall have the authority to require up to a 75 foot wide landscaped buffer area where a site abuts a more restrictive zone or an existing residential use. In addition, the Commission shall have the authority to require a landscaped buffer area when a commercial, industrial, multi-family or other non-residential use abuts a historic structure or a cemetery. The width of the buffer for commercial, industrial, multi-family or other non-residential use that abuts a historic structure or cemetery shall be determined with reference to the existing physical characteristics of the property, such as topography, adjacent flood hazard, the location of existing structures, existing non-conforming lot characteristics, the nature of activity or the nature of the landscaping plan but in no event may the Commission require more than a 75 foot buffer. Buffers for a commercial, industrial, multi-family or other non-residential use that abuts an environmentally sensitive feature such as a river, brook, pond or wetland area shall be as determined by the Inland Wetlands Agency. The designated buffer area shall be attractively landscaped and shall be designed to achieve the desired buffering objectives, which may include the visual screening of the proposed use from abutting properties, the minimizing of auditory impacts and the protection and enhancement of historic structures, cemeteries or environmentally sensitive features. The buffer design shall consider vegetated earthen berms, multiple rows of staggered evergreens, selective plantings, walls, fencing, existing vegetation and other landscape measures. Due to special provisions contained or referenced in Article X, Section S, the landscape buffer requirements contained in this subparagraph shall not apply to land zoned SC-SDD.
			• *Given that the property abuts another multi-family residential development and a natural gas facility, no buffering to protect adjacent uses is needed.*

			• *Staff defers to the Inland Wetlands Agent and Agency with regard to the proposed setback buffer between the area of disturbance and the on-site wetland. The applicant should consider some type of visual screening along the property line abutting the natural gas facility to screen that facility from view of the residents.* • *The architectural site plan identifies a "rain garden in the courtyard formed by three of the buildings; however, this is identified as a detention pond on the engineering plans. If this is intended to be a rain garden, landscape plantings should be revised to be consistent with rain garden design and a formal maintenance plan should be developed.* • *Suggest adding another dogwood next to the dumpster enclosure to screen view of the utility box.* • *Consider shifting the tree located in the landscape island between buildings 5 and 6 closer to the parking lot to improve summer shade coverage* • *Why is there a light fixture next to the detention pond/rain garden in the courtyard? Is the entire courtyard intended to be lit for safety?* • *Clarify whether there is a path around the detention pond/rain garden. Shows on photometrics plan but not on site layout plan or landscape plan.*
6	B.4.r	6.6	**Site Development Principles** **2.j:** Unless approved by the Commission, topsoil shall not be removed from developing areas except for sites of structures or manmade improvements. The topsoil from areas intended for such improvements shall be redistributed within the boundaries of the subject site to facilitate the provision of a suitable base for seeding and plantings. As necessary, additional topsoil shall be brought to the site. Soil and other materials shall not be temporarily or permanently stored in locations, which would cause suffocation of root systems of trees to be preserved. Applicable sand and gravel regulations shall be complied with.
			Add note that no topsoil is to be removed from the site.
6	B.4.S	6.9	**Erosion and Sedimentation Control**
			Update plan to address the following: • *4.b.1-No schedule is provided in narrative for grading and construction activities, including sequencing* • *4.g-No contingency plan provided* • *4.h-No information provided on specific individual responsible for compliance* • *7.b-No zoning permit to be issued until erosion and sedimentation controls have been installed per the approved specifications and a certificate is provided to this effect.*
6	B.4.t	6.12	**Stormwater Management**
			See comments from CME
10	A.12	New	**Special Provisions for SER-HO Zone**
			Revise plans to address following: • *d. Include bed per acre calculation on sheet T-1.0* • *d. Revise table on A1.1a to match density on sheet T-1.0* • *l. Please verify that the linear feet of planted parking lot perimeter shown on sheet L-1.1 is native or adaptive landscaping, not turf.*
10	C	10.14	**Signs**

			No sign information has been provided for review. Recommend providing sign design for PZC review, specifically with regard to free-standing signs per comment from CME regarding sight lines.
10	D.11	10.29	**Accessible Parking Spaces** - All proposed commercial, industrial, governmental and multi-family residential land uses shall provide accessible parking spaces for handicapped individuals. Said spaces shall conform with Section 14-253a(h) of the State Statutes. At a minimum, accessible parking spaces shall be provided in the number required by the State Building Code. However, additional handicap spaces may, depending on the number of entrances and the nature of the population served, be required by the Commission. Wherever feasible, the parking spaces located closest to a primary entrance shall be designated as accessible parking spaces. Appropriate access ways to and from the adjacent primary entrance shall be developed in association with all accessible parking spaces. All accessible parking spaces shall be clearly designated with signs situated approximately 5 feet above grade and, wherever possible, with pavement markings. The required crosshatch area shall be located on the right-hand side of each accessible space.
			Revise site plan to meet requirements related to location of crosshatch area for accessible spaces
10	D.17	10.30	**Lighting** - All parking and loading areas shall be adequately illuminated in order to prevent vehicular and pedestrian safety problems. All lighting fixtures shall be arranged (and, where appropriate, shielded) to prevent glare and to direct light away from any neighboring residential properties (also see Article VI, Section B.4.g.).
			There are areas in the parking lot with less than 0.5 footcandles, which is considered the minimum for safety in low activity areas. Revise spacing of light poles to ensure that minimum lighting for pedestrian safety is maintained.
10	D.18	10.30	**Snow Removal** - All parking and loading areas shall be designed, constructed and maintained to address snowplowing and snow removal needs for the site. All loading areas and the minimum number of parking spaces required by these regulations and any Commission approval requirements shall be available for year-round use.
			No snow removal storage areas are identified on the plan. When locating, consult with Inland Wetlands Agent to reduce impact of salt and other deicing materials on wetland.
10	H	10.45	**FILLING/GRADING/EXCAVATION/REMOVAL/PROCESSING OF SOIL, STONE, SAND AND GRAVEL, PEAT MOSS AND OTHER SIMILAR MATERIALS**
			No information on volume of material to be brought to the site, removed from the site or relocated on the site has been provided. Please provide so that staff can determine whether the provisions of this Section of the Regulations apply.
10	R	10.65	**Architectural and Design Standards**
			Due to the fact that this is an 8-30g application and these standards do not strictly relate to public health and safety, the following comments are advisory in nature and are not requirements. • *3.c. Given the small, compact nature of the site, it may be beneficial to reduce the number of different building elevations (proposed at 4). There seems to be a mix of traditional(buildings 1, 2, 3 and 7) and more modern elements (buildings 4, 5 and 6), which on a larger site may help reduce monotony but on a small site such as this may simply be introducing too much and become visually confusing.* • *3.f. No information is provided regarding mechanical systems. In addition to roof-mounted systems, consideration should also be given to potential location and screening of ground systems.* • *3.g. No information has been provided with regard to building materials.*

			• *3.j. No information has been provided with regard to signage, lighting, accessory structures etc. It is unclear where the fencing detail provided applies as the renderings appear to show low fencing associated with individual units and the spec identifies a 6 foot tall fence. In particular, building-mounted lighting and design of the waste/garden sheds should be provided given their impact on the overall design.* • *4.d. No information has been provided with regard to building lighting.* • *4.e. To reduce blue-light impacts on wetlands and wildlife habitat, lighting should be changed to 3,000 Kelvin or less for a warmer fixture.* • *4f. As noted previously, please provide pavement markings to indicate pedestrian crossings of drive aisles.*

FRONT LOAD CONTAINERS
TOTAL DIMENSIONS

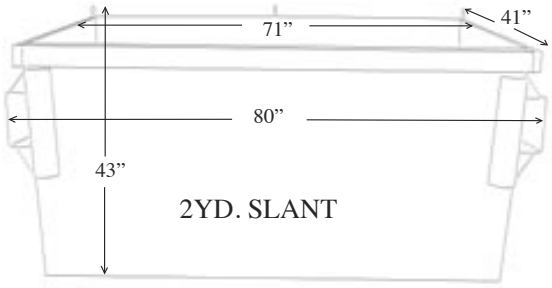

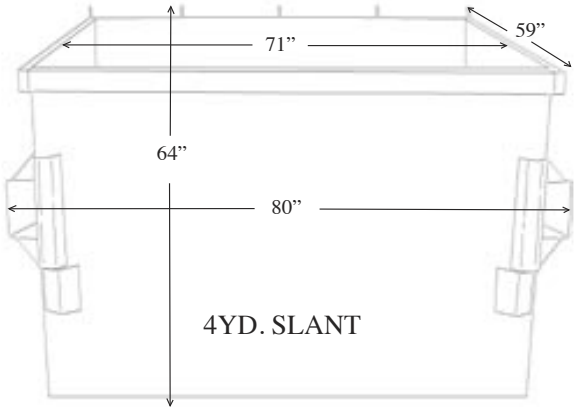

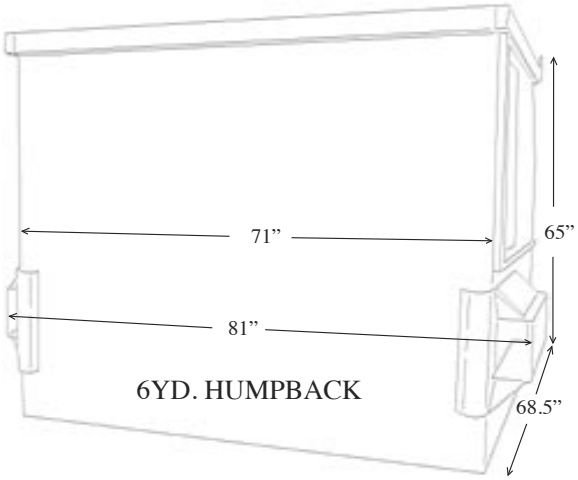

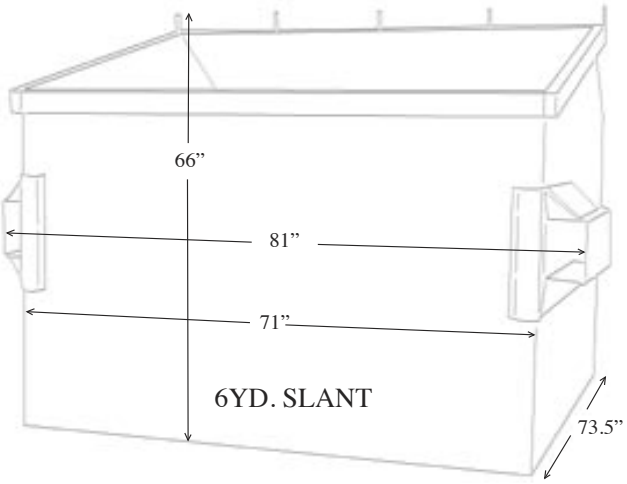

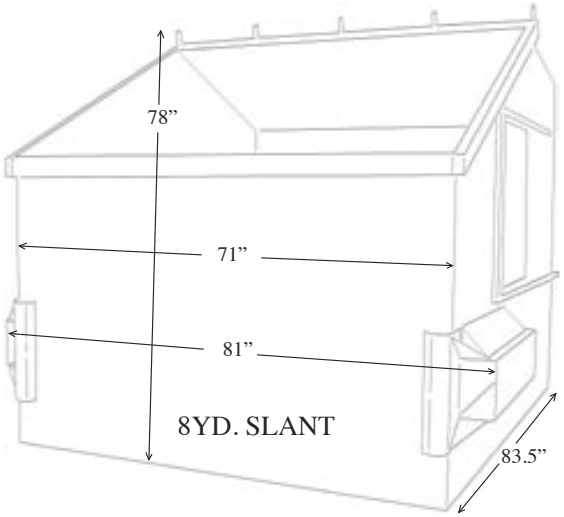

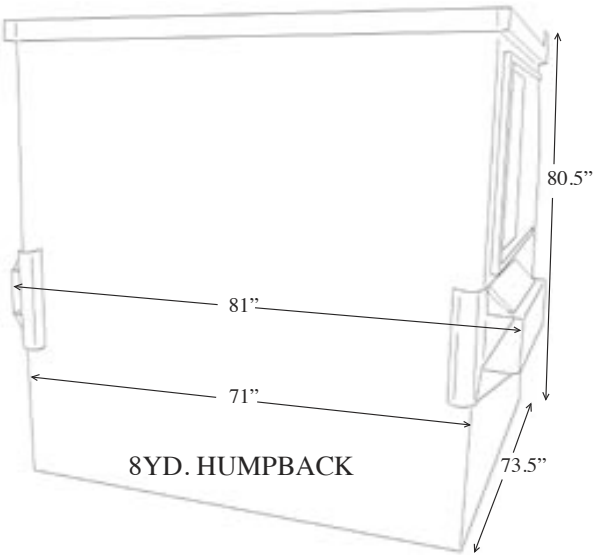

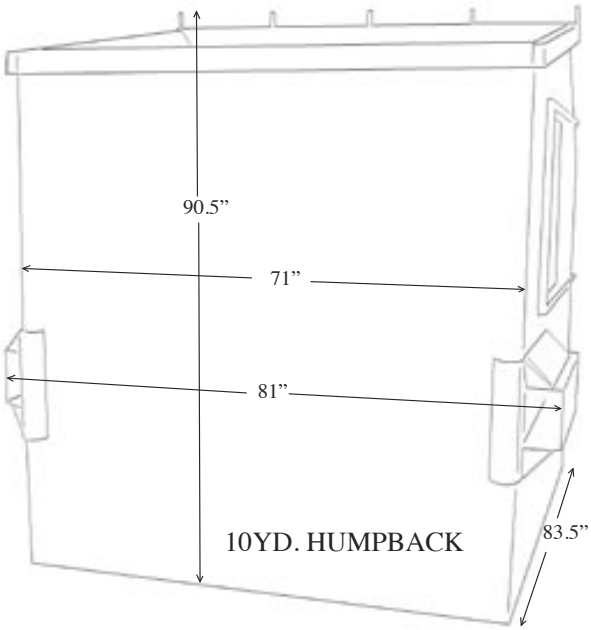

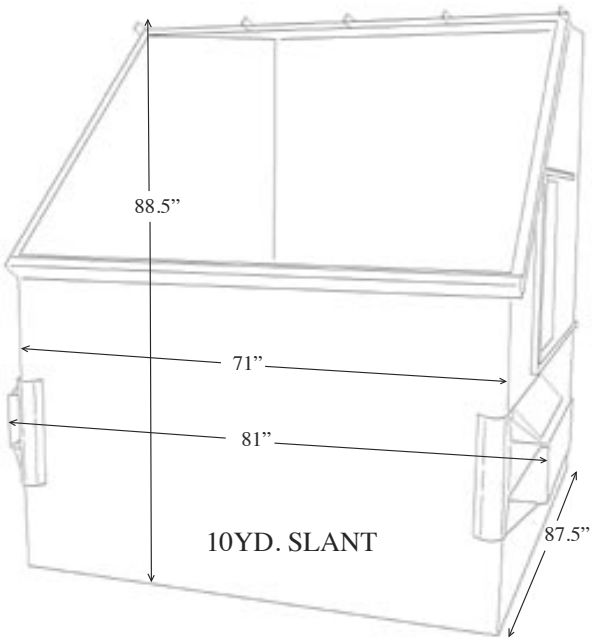

FRONT LOAD SPECIFICATIONS

- FLOOR: 12 GAUGE ON 2YD., 10 GAUGE ON 3YD. - 10YD.
- WALLS: 12 GAUGE
- BOTTOM SKIDS: 2.75” X 2.75” X 10GA. FORMED (2 ON 2YD. - 4YD., 3 ON 6YD. - 10YD.)
- TOP STIFFENERS: 3” X 3.5LB STRUCTURAL CHANNEL (ALL AROUND ON 2YD. - 4YD., FRONT & SIDE ON 6YD. - 10YD.)
- 6YD. - 10YD. REAR STIFFENER: 3 X 3 X 7GA. ANGLE (3 X 4 X 7GA. ANGLE ON 8YD. SLANT)
- LIFT ARM POCKETS: 5” DEEP X 8.25” HIGH X 30” LONG (24” LONG ON 2YD. & 3YD.) X 7 GAUGE (FULLY WELDED)
- POCKET COVERS: 12 GAUGE FULLY WELDED
- POCKET GUIDES: 7GA. FLARED
- BUMPER GUARDS: 16” HIGH, CIRCULAR BENT AROUND FRONT
- GUSSETS: 7 GAUGE
- HINGES: 7 GAUGE X 5/8” DIAMETER HOLE (3 HINGES 2YD. & 3YD.)(5 HINGES 4YD. - 10YD.)
- WINDOW FRAMES: 12 GAUGE FORMED W/ 27 X 27 OPENING
- SINGLE WALL PLASTIC SLIDING SIDE DOORS
- COVERS: (2) 36 X 41 PLASTIC SINGLE WALL ON 2YD. & 3YD.
  (2) 36 X 58 PLASTIC SINGLE WALL ON 4YD. - 10YD.
- 1/2” ZINC COATED THREADED HINGE ROD X 75”
- INSIDE BOTTOM AND CORNER SEEMS FULLY WELDED, WHERE SIDES MUST BE 2PCS. THEY ARE WELDED FULLY ON THE OUTSIDE & STITCHED ON THE INSIDE
- ALL CONTAINERS FITTED WITH RECEPTORS FOR MANUAL LOCK BARS & WINDOW LOCKS

OPTIONS

- MANUAL LOCKING BARS
- WINDOW LOCKS
- AUTO LOCK SYSTEM
- DOCK LID PACKAGE (27 X 60 OPENING ON REAR OF TOP OF 8YD. SLANT & 10YD. SLANT & 10YD. HUMPBACK STYLE)
- CARDBOARD SLOTS (6 X 60 OPENING IN FRONT TOP OF CONTAINER)
- CASTERS FOR 2YD.

Front Load Containers: Overall Dimensions

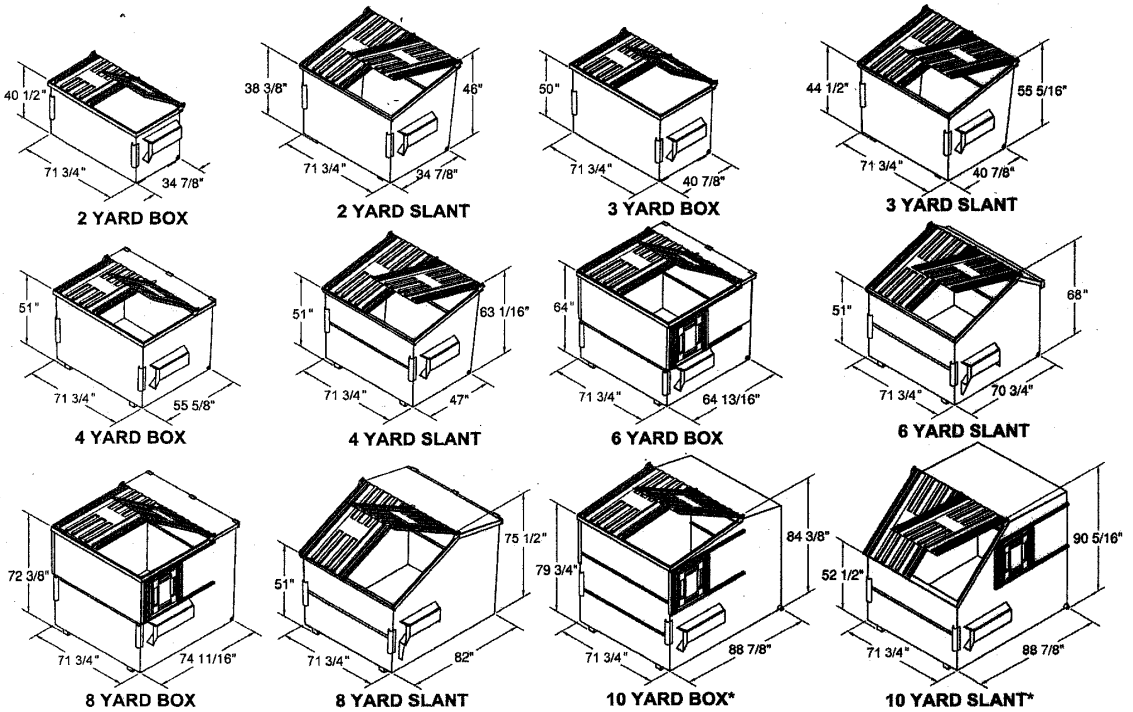

NOTE: 71-3/4" ID width is top dimension – floor width varies by model. * Indicates non-nested containers. Product dimensions may vary.

Model Size	2 YD BOX	3 YD BOX	4 YD BOX	6 YD BOX	8 YD BOX	10 YD BOX*	2 YD SLANT	3 YD SLANT	4 YD SLANT	6 YD SLANT	8 YD SLANT	10 YD SLANT*
Truckload Quantities 48' tr./53' tr.	53/57	34/37	25/28	14/16	13/14	6/7	49/53	31/36	28/31	14/16	13/14	6/7
Plastic Lid Standard	37" x 41" Single Wall	37" x 46" Single Wall	37" x 46" Single Wall	37" x 58" Single Wall	37" x 58" Single Wall	37" x 58" Single Wall	37" x 46" Single Wall	37" x 48" Single Wall	37" x 58" Single Wall	37" x 58" Single Wall	37" x 58" Single Wall	37" x 58" Single Wall
Side Door	N/A	N/A	N/A	30 x 30 Single Wall	30 x 30 Single Wall	30 x 30 Single Wall	N/A	N/A	N/A	N/A	N/A	Optional 30 x 30 Single Wall
Sides	12 GA.	12 GA.	12 GA.	12 GA.	12 GA.	12 GA.	12 GA.	12 GA.	12 GA.	12 GA.	12 GA.	12 GA.
Front	12 GA.	12 GA.	12 GA.	12 GA.	12 GA.	12 GA.	12 GA.	12 GA.	12 GA.	12 GA.	12 GA.	12 GA.
Rear	12 GA.	12 GA.	12 GA.	12 GA.	12 GA.	12 GA.	12 GA.	12 GA.	12 GA.	12 GA.	12 GA.	12 GA.
Bottom	10 GA.	10 GA.	10 GA.	10 GA.	10 GA.	10 GA.	10 GA.	10 GA.	10 GA.	10 GA.	10 GA.	10 GA.
Pockets	10 GA.	10 GA.	10 GA.	10 GA.	10 GA.	10 GA.	10 GA.	10 GA.	10 GA.	10 GA.	10 GA.	10 GA.
Bumpers	7 GA. Rounded	7 GA. Rounded	7 GA. Rounded	7 GA. Rounded	7 GA. Rounded	7 GA. Rounded	7 GA. Rounded	7 GA. Rounded	7 GA. Rounded	7 GA. Rounded	7 GA. Rounded	7 GA. Rounded
Bottom Channel	(4) Formed Caster Pads	(4) Formed Caster Pads	(2) Formed 3 x 4 x 10 GA. Channels	(2) Formed 3 x 4 x 10 GA. Channels	(2) Formed 3 x 4 x 10 GA. Channels	(2) Formed 3 x 4 x 10 GA. Channels	(4) Formed Caster Pads	(4) Formed Caster Pads	(2) Formed 3 x 4 x 10 GA. Channels	(2) Formed 3 x 4 x 10 GA. Channels	(2) Formed 3 x 4 x 10 GA. Channels	(2) Formed 3 x 4 x 10 GA. Channels
Back Tube	10 GA. Formed G-Channel	10 GA. Formed G-Channel	10 GA. Formed G-Channel	10 GA. Formed G-Channel	10 GA. Formed G-Channel	10 GA. Formed G-Channel	10 GA. Formed G-Channel	10 GA. Formed G-Channel	10 GA. Formed G-Channel	10 GA. Formed G-Channel	10 GA. Formed G-Channel	10 GA. Formed G-Channel
Front Tube	10 GA. Formed G-Channel	10 GA.Formed G-Channel	10 GA. Formed G-Channel	10 GA. Formed G-Channel	10 GA. Formed G-Channel	10 GA. Formed G-Channel	10 GA. Formed G-Channel	10 GA. Formed G-Channel	10 GA. Formed G-Channel	10 GA. Formed G-Channel	10 GA. Formed G-Channel	10 GA. Formed G-Channel
Side Tubes	12 GA. Formed G-Channel	12 GA. Formed G-Channel	12 GA. Formed G-Channel	12 GA. Formed G-Channel	12 GA. Formed G-Channel	12 GA. Formed G-Channel	12 GA. Formed G-Channel	12 GA. Formed G-Channel	12 GA. Formed G-Channel	12 GA. Formed G-Channel	12 GA. Formed G-Channel	12 GA. Formed G-Channel
Drain Plug	1 1/2" Dia. Plastic	1 1/2" Dia. Plastic	1 1/2" Dia. Plastic	1 1/2" Dia. Plastic	1 1/2" Dia. Plastic	1 1/2" Dia. Plastic	1 1/2" Dia. Plastic	1 1/2" Dia. Plastic	1 1/2" Dia. Plastic	1 1/2" Dia. Plastic	1 1/2" Dia. Plastic	1 1/2" Dia. Plastic
Theo. Weight	500#	625#	775#	1010#	1225#	1350#	531#	645#	765#	955#	1160#	1620#

NOTE: For XHD specifications, consult factory. Unless stated otherwise in writing, container sizes indicated on sales literature, invoices, price list, quotations, and delivery tickets are nominal sizes. Actual volume may vary from nominal sizes. *Shipping quantities based on typical 48' and 53' droppdeck trailers. Actual quantities may vary.

FIRE DEPARTMENT NAME UCONN

Wheel Base:	255
Tire Size:	425
Bumper Extension:	14

OUTSIDE CURB TO CURB TURNING RADIUS

Input wheelbase?	255
Input front wheel INSIDE turn angle?	46
Input offset from kingpin to outside of wheel	16

Turn radius is 37.14 ft.

WALL TO WALL TURNING RADIUS

Input wheelbase?	255
Input length of extension?	14
Input width of extension?	101
Input front wheel INSIDE turn angle?	46
Input radius at front corner?	12

Turn radius is 40.98 ft.

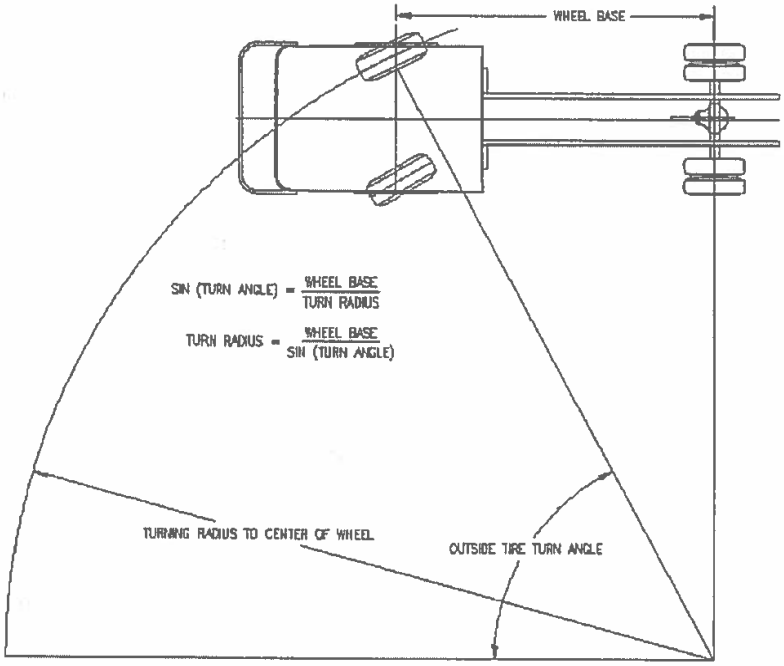

BSC GROUP
Transportation ▪ Energy ▪ Land Development

300 Winding Brook Drive
Glastonbury, CT 06033

Tel: 860-652-8227
800-288-8123

www.bscgroup.com

November 25, 2019

Planning and Development Department
Mansfield Town Hall
4 South Eagleville Road
Stors, CT 06268

RE: Site Plan Application and Wetlands Application Submission

To Whom It May Concern:

We are pleased to submit this package for your review. Please find enclosed the following documents as part of this submission:

Application Package

- Site Plan Application Form
- Site Plan Checklist
- Geotechnical Report
- Wetland Characterization Report
- Affordability Plan
- Windham Water Works Notification
- CT State IWW Activity Reporting Form
- Drainage Easement
- Connecticut Water Letter
- Traffic Summary
- IWW Application (Submitted Online)
- IWW Checklist (Found Online)
- Stormwater Management Report

Drawing Package – 1 Full Size Set and 2 Full Size Copies

- T-1.0 Title Sheet
- Sheet 1 Survey
- Sheet 1of 1 Survey
- Sheet 2 of 2 Survey
- EC-1.0 Existing Conditions Plan
- OV-1.0 Overall Site Improvements
- G-1.0 General Notes
- C-1.0 Erosion and Sedimentation Control Plan
- C-2.0 Site Preparation Plan
- C-3.0 Layout and Materials Plan
- C-4.0 Grading and Drainage Plan
- C-5.0 Utility Plan
- C-5.1 Sanitary Sewer Plan and Profile
- C-6.0-6.5 Details
- C-7.0 Intersection Sight Distance Plan
- L-1.0 Planting Plan
- L-1.1 Planting Ratios
- L-1.2 Shade Study
- L-2.0 Photometrics Plan
- A-1.1 Site Plan
- A-1.1A Site Information
- A-1.2 Overall First Floor Plan
- A-1.3 Overall Second Floor Plan
- A-2-1-2,3 Unit Type Plans
- A-3-1-3,7 Exterior Elevations

Please do not hesitate to contact Rob Newton at rnewton@bscgroup.com or 617-896-4564 with any inquiries you may have.

Very truly yours,
BSC Group-Connecticut, Inc.

Rachel Salch, PLA

Engineers
Environmental Scientists
Custom Software Developers
Landscape Architects
Planners
Surveyors

SITE PLAN APPLICATION
Mansfield Planning and Zoning Commission
(see Article V, Section A of the Zoning Regulations)

File #_____
Date 11/25/19

1. **Name of development** (where applicable) Eagleville Green

2. The **proposed use** of the property is Multifamily Residential
in accordance with Sec.(s)_____ of Article VII (Permitted Use provisions) of the Zoning Regulations

3. **Address/location** of subject property 113-121 South Eagleville Road, Storrs, CT 06268
Assessor's Map_____ Block 764 Lot(s)_____ Vol._____ Page 555

4. **Zone** of subject property South Eagleville Road Housing Zone Acreage of subject property 5.2

5. **Acreage** of adjacent land in same ownership (if any) N/A

6. **Applicant** Mansfield Nonprofit Housing Development Corporation
(please **PRINT**) Signature
Street Address 309 Maple Road Telephone 860-487-0693

Town Mansfield Zip code 06268

Interest in property: Owner x Optionee_____ Lessee_____ Other_____

(If "Other," please explain)_____

7. **Owner** of Record: Name Mansfield Nonprofit Housing Development Corporation Telephone 860-487-0693
(please **PRINT**)
Street Address 309 Maple Road Town Mansfield

Signature_____ Zip Code 06268

(OR attached Purchase Contract ____ OR attached letter consenting to application ____)

8. **Agent**(s) if any) representing the applicant who may be directly contacted regarding this application:
Name (PRINT) Kathy Dorgan St. Addr. 10 Eastwood Road
Town Storrs Zip Code 06268 Phone 860-487-6740
Involvement (legal, engineering, surveying, etc.) Architect

Name (PRINT) BSC Group, Inc. c/o Robert Newton St. Addr. 300 Winding Brook Drive
Town Glastonbury Zip Code 06033 Phone 617-896-4564
Involvement (legal, engineering, surveying, etc,) Engineering

(over)

Posted 1/2007

9. The following items have been submitted as part of this application:

x Application fee in the amount of $ 3,210
x Statement of Use further describing the nature and extent of the proposed use, and proposed site improvements. To assist the Commission with its reviews, applicants are encouraged to be as detailed as possible and to address the approval criteria contained in Art. V, Sec. A.5.
x Site plan (6 copies) as per Art. V, Sec. A.3.C of the Zoning Regulations
x Site Plan Checklist, including any waiver requests (Art. V, Sec. A.4)
N/A Sanitation report as per Art. V, Sec. A.3.D of the Zoning Regulations
x Other information (see Art. V, Sec. A.3.F). Please list items submitted (if any)

Geotechnical Report	Plans and Elevations
Wetland Characterization Report	
Affordability Plan	Drainage Easement
Windham Water Works Notification	
CT State IWW Activity Reporting Form	Connecticut Water Letter
	Traffic Summary

10. Neighborhood notification: All site plan applicants must notify abutting property owners pursuant to Art. V, Section 3.C (utilize Neighborhood Notification Form.)

11. All applications, including maps and other submissions, must comply with all applicable sections of the Zoning Regulations, including, but not limited to, the following:

Art. X, Sec. E	Flood Hazard Areas, Areas Subject to Flooding
Art. V, Sec. A	Site Plan Requirements (includes procedure, application requirements, approval criteria, conditions of approval and revisions)
Art. VI, Sec. A	Prohibited Uses
Art. VI, Sec. C	Bonding
Art. VI, Sec. B	Performance Standards
Art. VII	Permitted Uses
Art. VIII	Dimensional Requirements/Floor Area Requirements
Art. X, Sec. A	Special Regulations for Designed Development Districts
Art. X, Sec. C	Signs
Art. X, Sec. D	Parking and Loading
Art. X, Sec. H	Regulations Regarding Filling and Removal of Materials

* * * * * * * *

Statement of Use

The Mansfield Non-Profit Housing Development Corporation is proposing a project located at 113-121 South Eagleville Road in Mansfield, CT. This project involves the construction of a residential development containing 42 mixed-family residential units in 7 multi-story buildings spread over a 5.2-acre parcel. In addition to the constructed building complex, the site will include access via two driveway entrances, paved surface parking for approximately 87 vehicle spaces, and a community garden area that will improve the sense of community. The total area of construction activity (disturbed area) is approximately 3.2 acres.

Approximately 47,518 square feet of construction will be performed within the 150-foot wetland buffer zone and therefore the proposed activities are under the jurisdiction of the Mansfield Inland Wetland Agency (IWA). The IWA license application has been received by the Town of Mansfield and is currently under review. The IWA and Planning & Zoning Commission will be meeting on December 2, 2019 at 6:30pm to set a date for the public hearing.

BSC GROUP
Transportation ▪ Energy ▪ Land Development

300 Winding Brook Drive
Glastonbury, CT 06033

Tel: 860-652-8227
800-288-8123
Fax: 860-652-8229

www.bscgroup.com

November 25, 2019

Ms. Kathleen A. Dorgan, FAIA, LEED-AP
Principal
Dorgan Architecture & Planning
10 Eastwood Road
Storrs, CT 06268

RE: Traffic Summary
Mansfield Nonprofit Housing Development Corporation
Traffic Summary - Eagleville Green
113-121 South Eagleville Road
Mansfield, Connecticut

Dear Ms. Dorgan:

BSC Group-Connecticut, Inc. (BSC) is pleased to submit this summary of traffic-related considerations associated with *Mansfield Nonprofit Housing Development Corporation's* proposed Eagleville Green housing project located at 113-121 South Eagleville Road (S.R. 275) in the Town of Mansfield (the "Town"), Connecticut.

1.0 INTRODUCTION

The Eagleville Green development is located on a 5.2-acre parcel and will consist of seven (7) new multi-story housing buildings, accommodating 42 dwelling units, renovation of an existing house, surface parking for 87 vehicles, and other "typical" site improvements to support the proposed building program. In addition to the constructed building complex, the site will include access via two driveways intersection S.R. 275, an exterior play area for increase in activity and an improved sense of community, and a stone dust walking path through the middle of the site.

2.0 REGULATORY SUMMARY

2.1 Local Regulations

The project is located in the South Eagleville Road Housing Zone. Local regulations were used as the standard for the site design.

2.2 State Regulations

Office of the State Traffic Administration - Pursuant to Sections 14-311 and 14-311c of the Connecticut General Statutes, major traffic generators (MTG) are regulated as to their traffic impact on the state highway system in Connecticut by the Office of the State Traffic Administration (OSTA). A MTG is defined by Section 14-312-1 of the OSTA regulations as any development of 100,000 square feet or more of gross floor area or 200 or more parking spaces. The OSTA authority under these statutes applies to new MTGs as well as expansions or land use changes to those already in existence. However, entirely residential developments of 100 units or less are exempt from OSTA regulation under these statutes. The regulation of MTGs by the OSTA is accomplished via either an Administrative Decision (AD) or certification process (Certificate).

Engineers
Environmental Scientists
GIS Consultants
Landscape Architects
Planners
Surveyors

Although located on a State Highway (Route 275), the project does not require a MTG as it does not include 100,000 square feet or more of gross floor area, 200 or more parking spaces, and is an entirely residential development less than 100 units.

Encroachment Permit - The regulations associated with encroachments on the State highway system are defined in Section 13b-17 ("Encroachment Permit Regulations") of the Connecticut General Statutes. The proposed development includes two (2) driveways that will encroach on the state highway system (intersecting the S.R. 275 right-of-way) and therefore will require an Encroachment Permit from CTDOT District 2. Project plans depicting the proposed improvements will be submitted to CTDOT District 2 for their review following issuance of local land-use approvals. In accordance with the Encroachment Permit process, the contractor will secure the actual Encroachment Permit when the work has been scheduled.

Driveway Permit - Section 13a-143a (Driveway Permits) of the Connecticut General Statutes, requires a permit from the Commissioner of Transportation to construct a new driveway or relocate an existing driveway leading onto a state highway. In determining the advisability of issuing such permit, the commissioner shall include, in his consideration, the location of the driveway with respect to its effect on highway drainage, highway safety, the width and character of the highway affected, the density of traffic thereon and the character of such traffic.

3.0 DEVELOPMENT SUMMARY

Ingress/Egress - Ingress/egress for the project is accommodated with two (2) driveways intersection S.R. 275. S.R. 275 (South Eagleville Road) is classified by CTDOT as a two-lane bi-directional minor arterial. Each driveway is comprised of a 12-foot entrance lane and a 12-foot exit lane. The exit lanes are stop-controlled with a stop sign (MUTCD R1-1/CTDOT 31-0536) and a 12-inch wide white stop bar. The curb radius of each driveway is 25-feet. The intersection site distance at each driveway has been assessed at over 335-ft., which exceeds the minimum sight distance required for the posted limit of 30mph on S.R. 275 in the vicinity of both driveways.

Circulation and Parking - The parking area is configured as a single, continuous loop with a 24-foot drive isle that meets each driveway at S.R. 275. Parking fields are generally laid-out in three (3) primary areas, accommodating a total of 87 spaces (79 standard spaces and 8 handicapped parking spaces). Standard parking spaces are configured 90-degrees to the curb, and are 9 feet wide by 20-feet deep, delineated with 4-inch white lines. Handicapped parking spaces are configured 90-degrees to the curb, and consist of passenger car spaces (10-foot wide with a 5-foot access isle) and van spaces (8-foot wide with an 8-foot access isle). Handicapped parking signs are in accordance with the 2018 Connecticut State Building Code.

We appreciate the opportunity to be part of your team for this project. Please contact me at 860-652-8227 (extension 4558) if you have any questions or comments.

Sincerely,
BSC Group – Connecticut, Inc.

Dale L. Spencer, P.E. for

Kurt A. Prochorena, PE, LEED AP
Principal

WELTI GEOTECHNICAL, P.C.

227 Williams Street · P.O. Box 397
Glastonbury, CT 06033-0397

(860) 633-4623 / FAX (860) 657-2514

October 4, 2019

Ms. Rebecca M. Fields
Executive Director
Mansfield Housing Authority
309 Maple Road
Storrs, CT 06268

Re: Geotechnical Study for Proposed Housing, 113-121 South Eagleville Road, Storrs, CT

Dear Ms. Fields:

1.0 Herewith are the boring data pertaining to the above. Twelve borings were drilled to maximum depth of 26.5 feet or to auger refusal if above 26.5 feet. The boring locations are shown on the attached plan. *The borings were drilled by Clarence Welti Associates, Inc. and sampling was conducted by this firm solely to obtain indications of subsurface conditions as part of a geotechnical exploration program. No services were performed to evaluate subsurface environmental conditions.* Grain size gradation tests and water content tests were performed on six representative soil samples taken from the borings. The results of those tests are included in the Appendix.

2.0 The **Subject Project** will include the construction of a seven two story slab on grade housing structures with a total of 42 apartment units. The site development will include pavements for 72 regular spaces and 8 handicapped accessible spaces. The existing grades in the proposed developed area range from about Elev.622 to about Elev.612. There are two existing 2 ½ story residences on the site. At least one would be removed based on the proposed apartment building configuration. The site abuts a large wetland to the east of the developed area. A proposed grading plan was not available for this study.

3.0 The **Geologic Origin** of the natural inorganic soils consist generally of glacial lake deposits atop glacial moraine deposit. The lake deposits consist generally of medium compact to loose sand with trace to silt and gravel; or silt and fine sand.

3.1 The **Soils Cross Section** from the borings is generally as follows:

Topsoil to 6" to 12"

Locally Subsoil; fine to medium SAND, little to some Silt, trace Roots to 1.5 to 3 feet, loose

WELTI GEOTECHNICAL, P.C.

227 Williams Street · P.O. Box 397
Glastonbury, CT 06033-0397

(860) 633-4623 / FAX (860) 657-2514

October 4, 2019

Ms. Rebecca M. Fields
Executive Director
Mansfield Housing Authority
309 Maple Road
Storrs, CT 06268

Re: Geotechnical Study for Proposed Housing, 113-121 South Eagleville Road, Storrs, CT

Dear Ms. Fields:

1.0 Herewith are the boring data pertaining to the above. Twelve borings were drilled to maximum depth of 26.5 feet or to auger refusal if above 26.5 feet. The boring locations are shown on the attached plan. *The borings were drilled by Clarence Welti Associates, Inc. and sampling was conducted by this firm solely to obtain indications of subsurface conditions as part of a geotechnical exploration program. No services were performed to evaluate subsurface environmental conditions.* Grain size gradation tests and water content tests were performed on six representative soil samples taken from the borings. The results of those tests are included in the Appendix.

2.0 The **Subject Project** will include the construction of a seven two story slab on grade housing structures with a total of 42 apartment units. The site development will include pavements for 72 regular spaces and 8 handicapped accessible spaces. The existing grades in the proposed developed area range from about Elev.622 to about Elev.612. There are two existing 2 ½ story residences on the site. At least one would be removed based on the proposed apartment building configuration. The site abuts a large wetland to the east of the developed area. A proposed grading plan was not available for this study.

3.0 The **Geologic Origin** of the natural inorganic soils consist generally of glacial lake deposits atop glacial moraine deposit. The lake deposits consist generally of medium compact to loose sand with trace to silt and gravel; or silt and fine sand.

3.1 The **Soils Cross Section** from the borings is generally as follows:

Topsoil to 6" to 12"

Locally Subsoil; fine to medium SAND, little to some Silt, trace Roots to 1.5 to 3 feet, loose

Glacial Lake Soils: Stratified fine to fine to coarse SAND, trace to little Silt and Gravel; or SILT and fine SAND to 4.5 to 26+ feet, medium compact to about 8 feet and loose to medium compact below 8 feet

Moraine Soils: fine to medium SAND, some Silt, little Gravel and Cobbles to auger refusal on probable bedrock at 9.5 feet to 26+ feet, dense to very dense

3.2 The **ground water** in the boreholes was at 2 to 10 feet below the existing grades at the completion of the borings (Elev. 610 to Elev.612). It is possible with heavy spring rains the water table could rise locally for short periods to 2 to 3 feet above the wetlands water level of Elev. 610. This mounding of the water table would normally be some distance from the wetland and could possibly be atop low permeability soil. Building slabs on grade should be kept above Elev. 616 and foundations should if possible be kept above Elev. 614.

4.0 The **Criteria for Foundation Type and Loading** are as follows:

1. The maximum total settlement should not exceed 3/4" and the maximum differential settlement shall not exceed ½ the maximum settlement.

2. The Foundations and Structures must address the seismic section of the building code

3. The Slab at Grade floors must not settle differentially more than ½" in excess of the main structure subsidence.

4.1 Regarding item 2 (above), the seismic site soil profile classification can be **"D"**. The mapped MCE spectral response acceleration values for Mansfield, CT are $\mathbf{S_1 = 0.062}$ for one second period and $\mathbf{S_S = 0.173}$ for short period. For transfer of ground shear into the soil the ultimate friction factor can be **0.60.**

5.0 Regarding the **Foundation Type,** the building can be supported on spread footings. The footing sub grades can be on the natural inorganic soils, or on a controlled fill placed after the removal of any existing fills, topsoil and locally frost disturbed subsoils (assume frost disturbed soil to at least 2.5 feet below the existing grades). There should be minimum 4" layer of processed base or 3/8" crushed stone on a geotextile beneath the footings on the natural soils. Controlled fills should conform to section 6.0 below and should extend horizontally beyond the footings for a distance equal to at least the depth of fill beneath the footings.

5.1 The **Allowable Bearing Pressure** for spread footings on the crushed stone layer atop the natural soils or on the controlled fill can be 4,000 psf. The allowable loading can be increased by 1/3 for seismic or wind loading. At retaining walls the maximum pressure on the toe can be 50% higher than the average pressure, cited above.

5.2 The static **Lateral Soil Loading** on retaining walls that are part of the building (if any), should be based on at-rest pressure using the coefficient $\mathbf{K_O = 0.45}$ as cited in the table below. Lateral soil loading on retaining walls apart from the building can be designed with active pressure using the coefficient $\mathbf{K_A = 0.28}$ for level backfill. The ultimate sliding coefficient for concrete cast on crushed stone or on controlled fill is **0.60.**

5.3 The **Frost Protection Depth** is 3.5 feet below the finish grades in areas, which are exposed to weather.

5.4 Summary of Foundation Design Parameters:

Parameter	Value
Allowable Bearing Pressure	4,000 psf
Soil Unit Weight (Backfill) *	125 pcf
Internal Friction Angle (Backfill) *	34°
At-Rest Pressure Coefficient, K_O	0.45
Active Pressure Coefficient, K_A (level backfill)	0.28
Ultimate Sliding Coefficient, concrete on crushed stone over soil	0.60
Seismic Site Soil Profile Classification	D
Mapped MCE Spectral Response Acceleration for one second period, S_1	0.062
Mapped MCE Spectral Response Acceleration for short period, S_S	0.173
Frost Protection Depth	3.5 feet

* Backfill material conforming to section 6.0 below

6.0 Regarding **Controlled Fill, Backfill for Retaining Walls and Excavations at Columns and Walls, plus Slab at Grade Underlayment** (to 4" below the slab bottom) the material should conform to the following or be 3/8" crushed stone:

Percent Passing	Sieve Size
100	3.5"

50 - 100	3/4"
25 - 75	No.4

The fraction, passing the No.4 sieve should have less than 15%, passing the No. 200 sieve.

All backfill and fill must be compacted to at least 95% of modified optimum density.

6.1 All existing fill, topsoil and subsoils should be removed beneath the building floor and replaced with controlled fill conforming to section 6.0 above. There should be at least 18" of controlled fill beneath the floor slabs. The final 4" layer beneath the floor slab should be 3/8" crushed stone or 3/4"minus processed base. A vapor retarder is required beneath the slab at grade floors.

7.0 Regarding **Earthwork,** excavations in the natural soils will fall in OSHA Class C. This will require sloping of excavations, which are unshored and exceed 5 feet in height, to be cut back to slopes less than 34° from the horizontal (1.5H:1V).

8.0 Regarding **New Pavements,** there should be at least 10" of CTDOT gravel subbase or material conforming to section 6.0 above placed beneath the pavement sections. If the sub grades are on wet subsoils, the subsoils would probably have to be removed to provide a stable sub grade for placement of fills and the pavement sections. The recommended pavement sections above the subbase are as follows:

For main access road; 4" of bituminous concrete (1.5" Class 2 over 2.5" Class 1) on 6" of processed stone base

For car parking areas; 3" of bituminous concrete on 6" of processed stone base

For concrete pavements; (1) truck access; 7" concrete over 8" of processed stone base, (2) for passenger vehicles; 5" of concrete on 8" processed stone base.

For pavers: below sand bedding over 8" of processed stone base

8.1 ***For concrete aprons contiguous to the building there should be free draining material, either gravel subbase or controlled fill conforming to section 6.0 above, to 18" below grade. This is to avoid movement of the slab at flush doorways.*** The modulus of sub grade reaction atop the subbase would be at least 200 pci.

9.0 This report has been prepared for specific application to the subject project in accordance with generally accepted soil and foundation engineering practices. No other warranty, express or implied, is made. In the event that any changes in the nature, design and location of structures are planned, the conclusions and recommendations contained in this report should not be considered valid unless the changes are reviewed and conclusions of this report modified or verified in writing.

The analyses and recommendations submitted in this report are based in part upon data obtained from referenced explorations. The extent of variations between explorations may not become evident until construction. If variations then appear evident, it will be necessary to re-evaluate the recommendations of this report.

Welti Geotechnical, P.C., should perform a general review of the final design and specifications in order that geotechnical design recommendations may be properly interpreted and implemented as they were intended.

If you have any questions, please call our office.

Very truly yours,

Max Welti, P.E.
President, Welti Geotechnical, P.C.

Clarence Welti Ph.D., P. E.

APPENDIX

Boring Location Plan

Boring Data

Laboratory Test Results

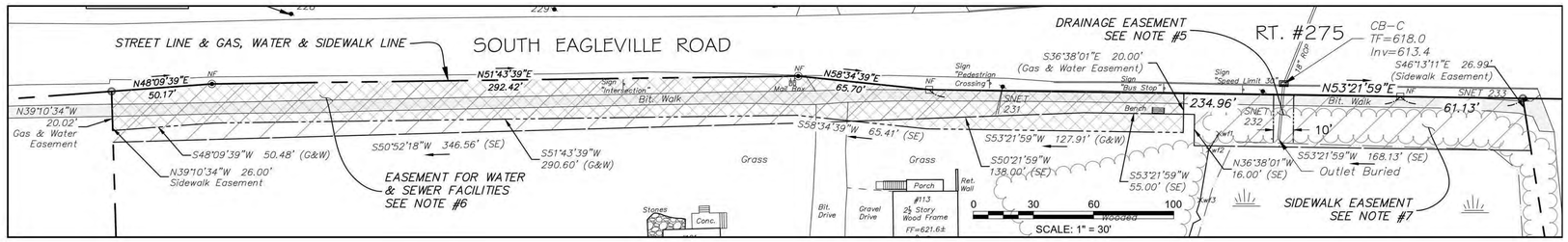

DETAIL DEPICTING EASEMENTS
Scale 1"=30'

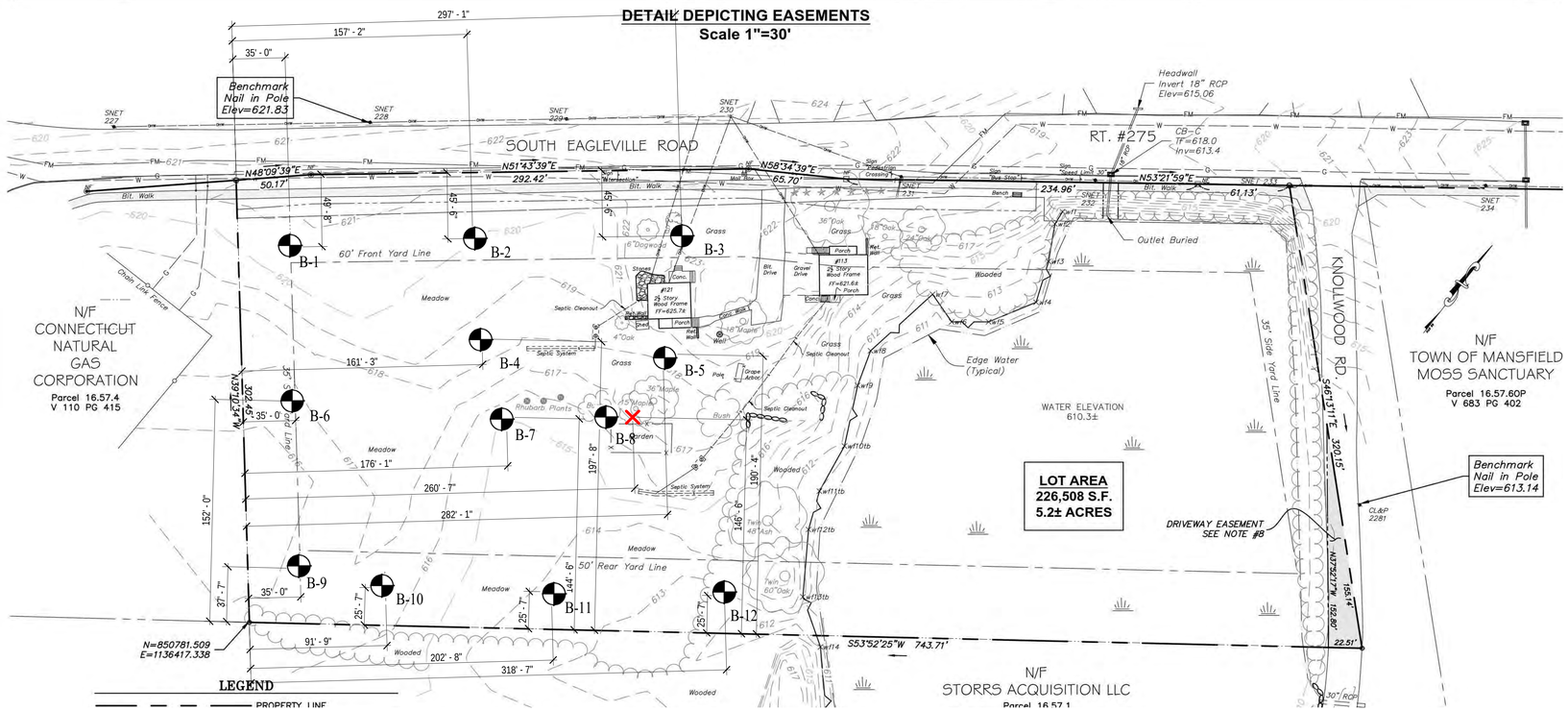

TEST BORING LOCATIONS
CLARENCE WELTI ASSOCIATES, INC.
9/26/19

1 A1.1 CONCEPTUAL SITE PLAN
SCALE: 1" = 30'-0"

PARKING

(73) REGULAR SPACES
(8) ACCESSIBLE SPACES

(81) TOTAL SPACES

81 SPACES/ 42 DWELLING UNITS = 1.92 SPACES/ UNIT

BUILDING HEIGHT

MAXIMUM BUILDING HEIGHT
(WITHOUT CUPOLA) = 33'-0"
(WITH CUPOLA) = 38'-6"

UNITS PER ACRE

PROPERTY AREA = 226,508 SF = +/-5.2 ACRES

UNITS/ ACRE, TOTAL SITE = 8.08

PROPERTY AREA - WETLANDS AREA = 150,720 SF = +/-3.46 ACRES

UNITS/ ACRE, TOTAL SITE - WETLANDS = 12.14

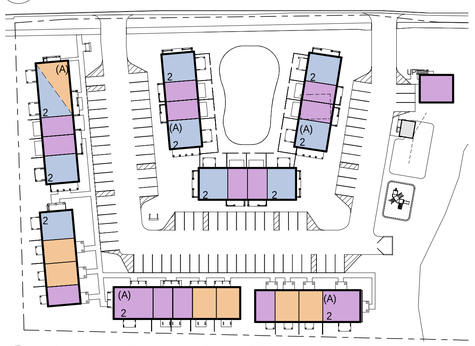

2 A1.1 DWELLING UNIT BREAKDOWN
SCALE: 1" = 60'-0"

LEGEND

1 BED
2 BED
3 BED

(A) = ACCESSIBLE GROUND FLOOR UNIT

ACCESSIBLE & 1 BED UNITS ARE 1 STORY/ STACKED.
ALL OTHER UNITS ARE 2 STORIES

PROJECT NORTH

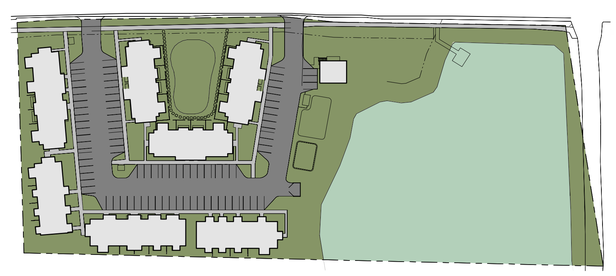

TOTAL PROPERTY AREA = 226,508 SF
BLDG. COVERAGE AREA = 32,620 SF
COVERAGE % = 14.40%

3 A1.1 SITE COVERAGE PLAN
SCALE: 1" = 80'-0"

UNIT BREAKDOWN

SOUTH EAGLEVILLE RD. HOUSING
MANSFIELD NON-PROFIT HOUSING DEVELOPMENT CORP.

UNIT TYPE	UNIT QTY.	BEDS		BATHS		1/2 BATHS		NET AREA	
		PER UNIT	TOTAL	PER UNIT	TOTAL	PER UNIT	TOTAL	PER UNIT	TOTAL
1 BEDROOM - TYPE #1	6	1	6	1	6	0	0	706	4,236
1 BEDROOM - TYPE #2	8	1	8	1	8	0	0	780	6,240
1 BEDROOM - TYPE #3	1	1	1	1	1	0	0	780	780
1 BEDROOM - TYPE #4	1	1	1	1	1	0	0	750	750
1 BEDROOM - ACCESSIBLE	2	1	2	1	2	0	0	706	1,412
2 BEDROOM - TYPE #1	12	2	24	1	12	1	12	1,045	12,540
2 BEDROOM - TYPE #2 (ACCESSIBLE)	2	2	4	1	2	0	0	980	1,960
2 BEDROOM - TYPE #3	2	2	4	1	2	0	0	1,060	2,120
2 BEDROOM - EXISTING BUILDING	1	2	2	1	1	1	1	1,200	1,200
3 BEDROOM - TYPE #1	6	3	18	2	12	0	0	1,260	7,560
3 BEDROOM - TYPE #2 (ACCESSIBLE)	1	3	3	2	2	0	0	1,400	1,400
TOTAL	42		73		49		13		40,198

S. EAGLEVILLE RD. HOUSING

MANSFIELD NON-PROFIT HOUSING DEVELOPMENT CORP.

dorgan architecture & planning

REVISIONS:

SHEET TITLE: SITE PLAN

PROJECT NAME: S. EAGLEVILLE RD. HOUSING

PROJECT #:

DRAWN BY:

DATE: 5/17/19

SHEET NUMBER

A1.1

CLARENCE WELTI ASSOC., INC.
P.O. BOX 397
GLASTONBURY, CONN 06033

CLIENT
MANSFIELD HOUSING AUTHORITY

PROJECT NAME
PROPOSED HOUSING

LOCATION
113-121 SOUTH EAGLEVILLE ROAD, MANSFIELD, CT

	AUGER	CASING	SAMPLER	CORE BAR.
TYPE	HSA		SS	
SIZE I.D.	3.75"		1.375"	
HAMMER WT.			140lbs	
HAMMER FALL			30"	

OFFSET
LINE & STA.
N. COORDINATE
E. COORDINATE

SURFACE ELEV. 620.5
HOLE NO. **B-1**

GROUND WATER OBSERVATIONS
AT 10.0 FT. AFTER 0 HOURS
AT FT. AFTER HOURS

START DATE 9/24/19
FINISH DATE 9/24/19

DEPTH	SAMPLE NO.	BLOWS/6"	DEPTH	A	STRATUM DESCRIPTION + REMARKS		ELEV.
0	1	1-2-1-10	0.0'-2.0'		TOPSOIL	0.50	620
					BR.FINE-MED.SAND, LITTLE SILT, TRACE GRAVEL	2.0	
	2	9-15-20-15	2.0'-4.0'		LIGHT BR. FINE-CRS.SAND, LITTLE SILT & GRAVEL		
	3	9-11-11-13	4.0'-6.0'				
5							615
10	4	3-3-4	10.0'-11.5'		BR.FINE SAND, LITTLE SILT	10.0	610
15	5	2-3-4	15.0'-16.5'		GREY/BR.SILT, TRACE FINE SAND	15.0	605
20	6	3-3-3	20.0'-21.5'				600
					GREY FINE-MED.SAND, SOME SILT, LITTLE GRAVEL	24.0	
25	7	60	25.0'-25.3'		BOTTOM OF BORING @ 25.4'	25.4	595
30							590
35							

LEGEND: COL. A:
SAMPLE TYPE: D=DRY A=AUGER C=CORE U=UNDISTURBED PISTON S=SPLIT SPOON
PROPORTIONS USED: TRACE=0-10% LITTLE=10-20% SOME=20-35% AND=35-50%

DRILLER: K. CHRISTIANA
INSPECTOR:

SHEET 1 OF 1 HOLE NO. **B-1**

CLARENCE WELTI ASSOC., INC. P.O. BOX 397 GLASTONBURY, CONN 06033	CLIENT MANSFIELD HOUSING AUTHORITY	PROJECT NAME PROPOSED HOUSING LOCATION 113-121 SOUTH EAGLEVILLE ROAD, MANSFIELD, CT

	AUGER	CASING	SAMPLER	CORE BAR.
TYPE	HSA		SS	
SIZE I.D.	3.75"		1.375"	
HAMMER WT.			140lbs	
HAMMER FALL			30"	

OFFSET
LINE & STA.
N. COORDINATE
E. COORDINATE

SURFACE ELEV. 620.0 | HOLE NO. **B-2**

GROUND WATER OBSERVATIONS
AT 10.0 FT. AFTER 0 HOURS
AT FT. AFTER HOURS

START DATE 9/24/19
FINISH DATE 9/24/19

DEPTH	SAMPLE NO.	BLOWS/6"	DEPTH	A	STRATUM DESCRIPTION + REMARKS		ELEV.
0	1	1-0-1-0	0.0'-2.0'		TOPSOIL	0.50	620
					BR.FINE-MED.SAND, SOME SILT, TRACE GRAVEL		
	2	1-2-2-4	2.0'-4.0'				
					LIGHT BR.FINE SAND, LITTLE SILT	3.0	
	3	4-7-8-8	4.0'-6.0'				
5							615
					GREY FINE-MED.SAND, SOME SILT & GRAVEL, FEW COBBLES	8.0	
10	4	60	10.0'-10.3'				610
15	5	4-24-32	15.0'-16.5'				605
					BOTTOM OF BORING @ 19.5' (AUGER REFUSAL)	19.5	
20							600
25							595
30							590
35							585

LEGEND: COL. A:
SAMPLE TYPE: D=DRY A=AUGER C=CORE U=UNDISTURBED PISTON S=SPLIT SPOON
PROPORTIONS USED: TRACE=0-10% LITTLE=10-20% SOME=20-35% AND=35-50%

DRILLER: K. CHRISTIANA
INSPECTOR:

SHEET 1 OF 1 | HOLE NO. **B-2**

CLARENCE WELTI ASSOC., INC. P.O. BOX 397 GLASTONBURY, CONN 06033	CLIENT MANSFIELD HOUSING AUTHORITY	PROJECT NAME PROPOSED HOUSING LOCATION 113-121 SOUTH EAGLEVILLE ROAD, MANSFIELD, CT

	AUGER	CASING	SAMPLER	CORE BAR.	OFFSET	SURFACE ELEV. 622.6	HOLE NO. B-3
TYPE	HSA		SS		LINE & STA.	GROUND WATER OBSERVATIONS	START DATE 9/24/19
SIZE I.D.	3.75"		1.375"		N. COORDINATE	AT none FT. AFTER 0 HOURS	
HAMMER WT.			140lbs			AT FT. AFTER HOURS	FINISH DATE 9/24/19
HAMMER FALL			30"		E. COORDINATE		

DEPTH	SAMPLE NO.	BLOWS/6"	DEPTH	A	STRATUM DESCRIPTION + REMARKS		ELEV.
0	1	1-2-4-3	0.0'-2.0'		TOPSOIL	0.50	
					BR.FINE-MED.SAND, SOME SILT, TRACE GRAVEL		
	2	2-3-2-12	2.0'-4.0'		LIGHT BR.FINE-MED.SAND, LITTLE SILT, TRACE GRAVEL	2.5	620
	3	10-28-60	4.0'-5.1'		GREY/BR. FINE-CRS.SAND, LITTLE TO SOME SILT & GRAVEL	4.5	
5							615
					BOTTOM OF BORING @ 9.5' (AUGER REFUSAL)	9.5	
10							610
15							605
20							600
25							595
30							590
35							

LEGEND: COL. A:

SAMPLE TYPE: D=DRY A=AUGER C=CORE U=UNDISTURBED PISTON S=SPLIT SPOON

PROPORTIONS USED: TRACE=0-10% LITTLE=10-20% SOME=20-35% AND=35-50%

DRILLER: K. CHRISTIANA

INSPECTOR:

SHEET 1 OF 1 HOLE NO. **B-3**

CLARENCE WELTI ASSOC., INC.
P.O. BOX 397
GLASTONBURY, CONN 06033

CLIENT
MANSFIELD HOUSING AUTHORITY

PROJECT NAME
PROPOSED HOUSING

LOCATION
113-121 SOUTH EAGLEVILLE ROAD, MANSFIELD, CT

	AUGER	CASING	SAMPLER	CORE BAR.
TYPE	HSA		SS	
SIZE I.D.	3.75"		1.375"	
HAMMER WT.			140lbs	
HAMMER FALL			30"	

OFFSET
LINE & STA.
N. COORDINATE
E. COORDINATE

SURFACE ELEV. 618.5
HOLE NO. **B-4**

GROUND WATER OBSERVATIONS
AT 8.0 FT. AFTER 0 HOURS
AT FT. AFTER HOURS

START DATE 9/25/19
FINISH DATE 9/25/19

DEPTH	SAMPLE NO.	BLOWS/6"	DEPTH	A	STRATUM DESCRIPTION + REMARKS		ELEV.
0	1	1-0-1-3	0.0'-2.0'		TOPSOIL	0.57	
					BR.FINE-MED.SAND, SOME SILT, TRACE ROOTS		
	2	3-7-7-7	2.0'-4.0'				
					LIGHT BR.FINE-CRS.SAND, TRACE SILT & FINE GRAVEL	3.0	615
	3	5-6-7-8	4.0'-6.0'				
5							
							610
10	4	2-3-3	10.0'-11.5'		GREY/BR.FINE-MED.SAND, LITTLE SILT, TRACE GRAVEL	10.0	
							605
15	5	1-3-15	15.0'-16.5'				
					GREY FINE-MED.SAND, SOME SILT, LITTLE GRAVEL	16.0	
							600
					BOTTOM OF BORING @ 19.0' (AUGER REFUSAL)	19.0	
20							
							595
25							
							590
30							
							585
35							

LEGEND: COL. A:
SAMPLE TYPE: D=DRY A=AUGER C=CORE U=UNDISTURBED PISTON S=SPLIT SPOON
PROPORTIONS USED: TRACE=0-10% LITTLE=10-20% SOME=20-35% AND=35-50%

DRILLER: K. CHRISTIANA
INSPECTOR:

SHEET 1 OF 1 HOLE NO. **B-4**

CLARENCE WELTI ASSOC., INC.
P.O. BOX 397
GLASTONBURY, CONN 06033

CLIENT
MANSFIELD HOUSING AUTHORITY

PROJECT NAME
PROPOSED HOUSING

LOCATION
113-121 SOUTH EAGLEVILLE ROAD, MANSFIELD, CT

	AUGER	CASING	SAMPLER	CORE BAR.
TYPE	HSA		SS	
SIZE I.D.	3.75"		1.375"	
HAMMER WT.			140lbs	
HAMMER FALL			30"	

OFFSET
LINE & STA.
N. COORDINATE
E. COORDINATE

SURFACE ELEV. 618.3
HOLE NO. B-5

GROUND WATER OBSERVATIONS
AT 8.0 FT. AFTER 0 HOURS
AT FT. AFTER HOURS

START DATE 9/26/19
FINISH DATE 9/26/19

DEPTH	SAMPLE NO.	BLOWS/6"	DEPTH	A	STRATUM DESCRIPTION + REMARKS		ELEV.
0	1	1-1-1-1	0.0'-2.0'		TOPSOIL		
					BR.FINE-CRS.SAND, LITTLE SILT, TRACE GRAVEL & ROOTS	1.0	
	2	6-10-10-8	2.0'-4.0'		BR.FINE-CRS.SAND, LITTLE GRAVEL, TRACE SILT	2.5	615
	3	6-6-9-9	4.0'-6.0'				
5					LIGHT BR.FINE-MED.SAND, TRACE SILT	5.0	
					GREY/BR. FINE-CRS.SAND, SOME SILT, LITTLE GRAVEL	8.0	610
10	4	60	10.0'-10.5'				
					BOTTOM OF BORING @ 11.0' (AUGER REFUSAL)	11.0	
							605
15							
							600
20							
							595
25							
							590
30							
							585
35							

LEGEND: COL. A:
SAMPLE TYPE: D=DRY A=AUGER C=CORE U=UNDISTURBED PISTON S=SPLIT SPOON
PROPORTIONS USED: TRACE=0-10% LITTLE=10-20% SOME=20-35% AND=35-50%

DRILLER: K. CHRISTIANA
INSPECTOR:

SHEET 1 OF 1 HOLE NO. **B-5**

CLARENCE WELTI ASSOC., INC. P.O. BOX 397 GLASTONBURY, CONN 06033	CLIENT MANSFIELD HOUSING AUTHORITY	PROJECT NAME PROPOSED HOUSING LOCATION 113-121 SOUTH EAGLEVILLE ROAD, MANSFIELD, CT

	AUGER	CASING	SAMPLER	CORE BAR.
TYPE	HSA		SS	
SIZE I.D.	3.75"		1.375"	
HAMMER WT.			140lbs	
HAMMER FALL			30"	

OFFSET
LINE & STA.
N. COORDINATE
E. COORDINATE

SURFACE ELEV. 616.8 | HOLE NO. **B-6**

GROUND WATER OBSERVATIONS
AT 6.0 FT. AFTER 0 HOURS
AT FT. AFTER HOURS

START DATE 9/24/19
FINISH DATE 9/24/19

DEPTH	SAMPLE NO.	BLOWS/6"	DEPTH	A	STRATUM DESCRIPTION + REMARKS		ELEV.
0	1	1-1-1-2	0.0'-2.0'		TOPSOIL		
					BR.FINE-CRS.SAND, SOME SILT, TRACE GRAVEL	0.66	
							615
	2	2-3-3-4	2.0'-4.0'		LIGHT BR. FINE-MED.SAND, TRACE TO LITTLE SILT	2.5	
	3	4-5-6-6	4.0'-6.0'				
5					GREY/BR.FINE SAND, TRACE TO LITTLE SILT	5.0	
							610
10	4	3-2-2	10.0'-11.5'				
							605
15	5	1-2-2	15.0'-16.5'				
							600
20	6	2-1-2	20.0'-21.5'				
							595
25	7	2-3-4	25.0'-27.0'				
					BOTTOM OF BORING @ 26.5'	26.5	590
30							
							585
35							

LEGEND: COL. A:

SAMPLE TYPE: D=DRY A=AUGER C=CORE U=UNDISTURBED PISTON S=SPLIT SPOON

PROPORTIONS USED: TRACE=0-10% LITTLE=10-20% SOME=20-35% AND=35-50%

DRILLER: K. CHRISTIANA
INSPECTOR:

SHEET 1 OF 1 | HOLE NO. **B-6**

CLARENCE WELTI ASSOC., INC.
P.O. BOX 397
GLASTONBURY, CONN 06033

CLIENT
MANSFIELD HOUSING AUTHORITY

PROJECT NAME
PROPOSED HOUSING

LOCATION
113-121 SOUTH EAGLEVILLE ROAD, MANSFIELD, CT

	AUGER	CASING	SAMPLER	CORE BAR.
TYPE	HSA		SS	
SIZE I.D.	3.75"		1.375"	
HAMMER WT.			140lbs	
HAMMER FALL			30"	

OFFSET
LINE & STA.
N. COORDINATE
E. COORDINATE

SURFACE ELEV. 615.0
HOLE NO. **B-7**

GROUND WATER OBSERVATIONS
AT 6.0 FT. AFTER 0 HOURS
AT FT. AFTER HOURS

START DATE 9/25/19
FINISH DATE 9/25/19

DEPTH	SAMPLE NO.	BLOWS/6"	DEPTH	A	STRATUM DESCRIPTION + REMARKS		ELEV.
0	1	1-1-1-1	0.0'-2.0'		TOPSOIL	0.56	615
					BR.FINE-MED.SAND, LITTLE TO SOME SILT		
	2	1-0-2-4	2.0'-4.0'			3.0	
					BR.FINE-CRS.SAND, LITTLE SILT		
	3	2-4-4-5	4.0'-6.0'			4.5	
5					BR. FINE-CRS.SAND, LITTLE SILT, TRACE GRAVEL		610
						8.0	
					GREY/BR.FINE-CRS.SAND, TRACE SILT & FINE GRAVEL		
10	4	1-2-2	10.0'-11.5'				605
15	5	2-3-3	15.0'-16.5'				600
20						20.0	595
	6	15-26-24	20.0'-21.5'		GREY/BR.FINE-MED.SAND, SOME SILT, LITTLE GRAVEL		
						23.0	
					BOTTOM OF BORING @ 23.0' (AUGER REFUSAL)		
25							590
30							585
35							580

LEGEND: COL. A:
SAMPLE TYPE: D=DRY A=AUGER C=CORE U=UNDISTURBED PISTON S=SPLIT SPOON
PROPORTIONS USED: TRACE=0-10% LITTLE=10-20% SOME=20-35% AND=35-50%

DRILLER: K. CHRISTIANA
INSPECTOR:

SHEET 1 OF 1 HOLE NO. **B-7**

CLARENCE WELTI ASSOC., INC.
P.O. BOX 397
GLASTONBURY, CONN 06033

CLIENT
MANSFIELD HOUSING AUTHORITY

PROJECT NAME
PROPOSED HOUSING

LOCATION
113-121 SOUTH EAGLEVILLE ROAD, MANSFIELD, CT

	AUGER	CASING	SAMPLER	CORE BAR.
TYPE	HSA		SS	
SIZE I.D.	3.75"		1.375"	
HAMMER WT.			140lbs	
HAMMER FALL			30"	

OFFSET
LINE & STA.
N. COORDINATE
E. COORDINATE

SURFACE ELEV. 616.0
HOLE NO. **B-8**

GROUND WATER OBSERVATIONS
AT 5.0 FT. AFTER 0 HOURS
AT FT. AFTER HOURS

START DATE 9/26/19
FINISH DATE 9/26/19

DEPTH	SAMPLE NO.	BLOWS/6"	DEPTH	A	STRATUM DESCRIPTION + REMARKS		ELEV.
0	1	1-0-1-2	0.0'-2.0'		TOPSOIL	0.56	
					BR.FINE-CRS.SAND, SOME SILT, TRACE GRAVEL		615
	2	1-2-3-2	2.0'-4.0'				
					BR.FINE-MED.SAND, TRACE SILT	3.0	
	3	2-4-4-5	4.0'-6.0'		GREY/BR.SILT, SOME FINE SAND	4.5	
5							610
10	4	17-20-17	10.0'-11.5'		GREY/BR.FINE-CRS.SAND, SOME SILT & GRAVEL	10.0	
							605
					BOTTOM OF BORING @ 13.5' (AUGER REFUSAL)	13.5	
15							600
20							595
25							590
30							585
35							

LEGEND: COL. A:
SAMPLE TYPE: D=DRY A=AUGER C=CORE U=UNDISTURBED PISTON S=SPLIT SPOON
PROPORTIONS USED: TRACE=0-10% LITTLE=10-20% SOME=20-35% AND=35-50%

DRILLER: K. CHRISTIANA
INSPECTOR:

SHEET 1 OF 1 HOLE NO. **B-8**

CLARENCE WELTI ASSOC., INC. P.O. BOX 397 GLASTONBURY, CONN 06033	CLIENT MANSFIELD HOUSING AUTHORITY	PROJECT NAME PROPOSED HOUSING LOCATION 113-121 SOUTH EAGLEVILLE ROAD, MANSFIELD, CT

	AUGER	CASING	SAMPLER	CORE BAR.
TYPE	HSA		SS	
SIZE I.D.	3.75"		1.375"	
HAMMER WT.			140lbs	
HAMMER FALL			30"	

OFFSET
LINE & STA.
N. COORDINATE
E. COORDINATE

SURFACE ELEV. 616.4 | HOLE NO. **B-9**

GROUND WATER OBSERVATIONS
AT 4.0 FT. AFTER 0 HOURS
AT FT. AFTER HOURS

START DATE 9/25/19
FINISH DATE 9/25/19

DEPTH	SAMPLE NO.	BLOWS/6"	DEPTH	A	STRATUM DESCRIPTION + REMARKS		ELEV.
0	1	1-1-1-1	0.0'-2.0'		TOPSOIL	0.50	
					BR.FINE-MED.SAND, SOME SILT, TRACE GRAVEL		615
	2	4-6-6-6	2.0'-4.0'				
					BR.FINE-MED. SAND, TRACE SILT & GRAVEL	3.0	
	3	4-5-5-6	4.0'-6.0'				
5							
					GREY/BR.FINE-MED.SAND, LITTLE SILT	6.0	610
10	4	2-2-2	10.0'-11.5'				
							605
15	5	3-3-4	15.0'-16.5'				
							600
20	6	2-3-3	20.0'-21.5'				
							595
25	7	4-6-7	25.0'-26.5'				
					BOTTOM OF BORING @ 26.5'	26.5	590
30							
							585
35							

LEGEND: COL. A:
SAMPLE TYPE: D=DRY A=AUGER C=CORE U=UNDISTURBED PISTON S=SPLIT SPOON
PROPORTIONS USED: TRACE=0-10% LITTLE=10-20% SOME=20-35% AND=35-50%

DRILLER: K. CHRISTIANA
INSPECTOR:

SHEET 1 OF 1 | HOLE NO. **B-9**

CLARENCE WELTI ASSOC., INC.
P.O. BOX 397
GLASTONBURY, CONN 06033

CLIENT
MANSFIELD HOUSING AUTHORITY

PROJECT NAME
PROPOSED HOUSING

LOCATION
113-121 SOUTH EAGLEVILLE ROAD, MANSFIELD, CT

	AUGER	CASING	SAMPLER	CORE BAR.
TYPE	HSA		SS	
SIZE I.D.	3.75"		1.375"	
HAMMER WT.			140lbs	
HAMMER FALL			30"	

OFFSET
LINE & STA.
N. COORDINATE
E. COORDINATE

SURFACE ELEV. 616.5
HOLE NO. **B-10**

GROUND WATER OBSERVATIONS
AT 5.0 FT. AFTER 0 HOURS
AT FT. AFTER HOURS

START DATE 9/25/19
FINISH DATE 9/25/19

DEPTH	SAMPLE NO.	BLOWS/6"	DEPTH	A	STRATUM DESCRIPTION + REMARKS		ELEV.
0	1	1-1-0-2	0.0'-2.0'		TOPSOIL	0.56	
					BR.FINE-MED.SAND, LITTLE TO SOME SILT, TRACE GRAVEL		615
	2	1-3-5-5	2.0'-4.0'			3.0	
					BR.FINE-CRS.SAND, TRACE SILT & GRAVEL		
	3	3-5-6-6	4.0'-6.0'				
5							610
10	4	2-2-2	10.0'-11.5'		GREY/BR.FINE-MED.SAND, LITTLE SILT, TRACE GRAVEL	10.0	
							605
15	5	2-1-2	15.0'-16.5'				
							600
20	6	2-2-2	20.0'-21.5'				
							595
25	7	5-8-8	25.0'-26.5'				
					BOTTOM OF BORING @ 26.5'	26.5	590
30							585
35							

LEGEND: COL. A:
SAMPLE TYPE: D=DRY A=AUGER C=CORE U=UNDISTURBED PISTON S=SPLIT SPOON
PROPORTIONS USED: TRACE=0-10% LITTLE=10-20% SOME=20-35% AND=35-50%

DRILLER: K. CHRISTIANA
INSPECTOR:

SHEET 1 OF 1 HOLE NO. **B-10**

CLARENCE WELTI ASSOC., INC.
P.O. BOX 397
GLASTONBURY, CONN 06033

CLIENT
MANSFIELD HOUSING AUTHORITY

PROJECT NAME
PROPOSED HOUSING

LOCATION
113-121 SOUTH EAGLEVILLE ROAD, MANSFIELD, CT

	AUGER	CASING	SAMPLER	CORE BAR.
TYPE	HSA		SS	
SIZE I.D.	3.75"		1.375"	
HAMMER WT.			140lbs	
HAMMER FALL			30"	

OFFSET
LINE & STA.
N. COORDINATE
E. COORDINATE

SURFACE ELEV. 613.7
HOLE NO. **B-11**

GROUND WATER OBSERVATIONS
AT 3.5 FT. AFTER 0 HOURS
AT FT. AFTER HOURS

START DATE 9/26/19
FINISH DATE 9/26/19

DEPTH	SAMPLE NO.	BLOWS/6"	DEPTH	A	STRATUM DESCRIPTION + REMARKS		ELEV.
0	1	1-2-4-5	0.0'-2.0'		TOPSOIL	0.56	
					LIGHT BR.FINE-CRS.SAND, TRACE TO LITTLE SILT		
	2	5-5-6-4	2.0'-4.0'				
					BR.FINE-CRS.SAND, TRACE SILT	3.5	610
	3	3-4-5-4	4.0'-6.0'				
5							
						9.0	605
					GREY/BR. FINE-CRS.SAND, SOME SILT, LITTLE GRAVEL, EW COBBLES		
10	4	24-32-60	10.0'-11.3'				
						14.0	600
					BOTTOM OF BORING @ 14.0' (AUGER REFUSAL)		
15							
							595
20							
							590
25							
							585
30							
							580
35							

LEGEND: COL. A:
SAMPLE TYPE: D=DRY A=AUGER C=CORE U=UNDISTURBED PISTON S=SPLIT SPOON
PROPORTIONS USED: TRACE=0-10% LITTLE=10-20% SOME=20-35% AND=35-50%

DRILLER: K. CHRISTIANA
INSPECTOR:

SHEET 1 OF 1 HOLE NO. **B-11**

CLARENCE WELTI ASSOC., INC. P.O. BOX 397 GLASTONBURY, CONN 06033	CLIENT MANSFIELD HOUSING AUTHORITY	PROJECT NAME PROPOSED HOUSING LOCATION 113-121 SOUTH EAGLEVILLE ROAD, MANSFIELD, CT

	AUGER	CASING	SAMPLER	CORE BAR.
TYPE	HSA		SS	
SIZE I.D.	3.75"		1.375"	
HAMMER WT.			140lbs	
HAMMER FALL			30"	

OFFSET
LINE & STA.
N. COORDINATE
E. COORDINATE

SURFACE ELEV. 612.8 | HOLE NO. **B-12**

GROUND WATER OBSERVATIONS
AT 2.0 FT. AFTER 0 HOURS
AT FT. AFTER HOURS

START DATE 9/26/19
FINISH DATE 9/26/19

DEPTH	SAMPLE NO.	BLOWS/6"	DEPTH	A	STRATUM DESCRIPTION + REMARKS	ELEV.
0	1	1-3-6-5	0.0'-2.0'		TOPSOIL 0.50	
					GREY/BR.FINE-MED.SAND, TRACE TO LITTLE SILT	
	2	4-6-5-5	2.0'-4.0'			610
	3	3-3-5-5	4.0'-6.0'			
5						
						605
10					10.0	
	4	8-9-15	10.0'-11.5'		GREY FINE-MED.SAND, SOME SILT & GRAVEL	
						600
15	5	7-12-13	15.0'-16.5'			
						595
20					20.0	
					BOTTOM OF BORING @ 20.0' (AUGER REFUSAL)	
						590
25						
						585
30						
						580
35						

LEGEND: COL. A:
SAMPLE TYPE: D=DRY A=AUGER C=CORE U=UNDISTURBED PISTON S=SPLIT SPOON
PROPORTIONS USED: TRACE=0-10% LITTLE=10-20% SOME=20-35% AND=35-50%

DRILLER: K. CHRISTIANA
INSPECTOR:

SHEET 1 OF 1 | HOLE NO. **B-12**

Particle Size Distribution Report

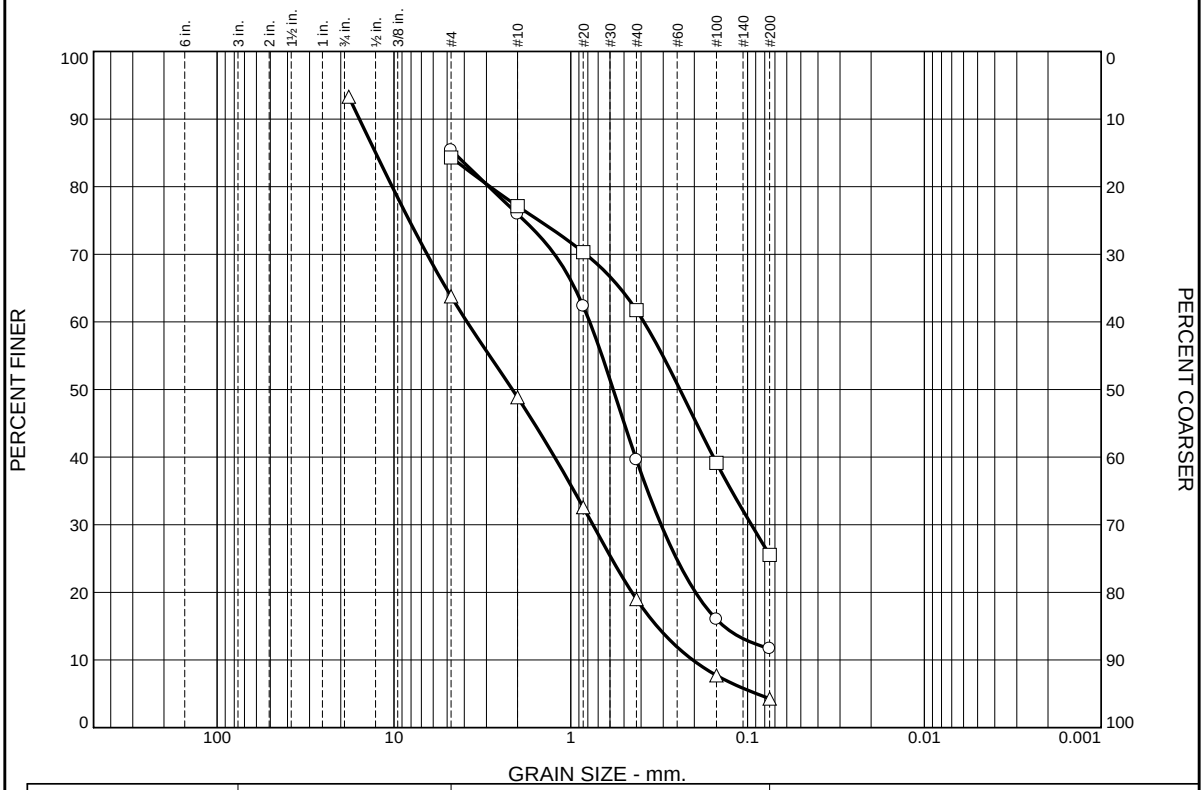

	% +3"	% Gravel		% Sand			% Fines	
		Coarse	Fine	Coarse	Medium	Fine	Silt	Clay
○				9.4	36.4	27.9	11.7	
□				7.2	15.4	36.2	25.5	
△				14.9	29.9	14.7	4.3	

	LL	PL	D_{85}	D_{60}	D_{50}	D_{30}	D_{15}	D_{10}	C_c	C_u
○			4.5758	0.7815	0.5748	0.3083	0.1364			
□				0.3857	0.2412	0.0952				
△			12.6836	3.8573	2.1377	0.7497	0.3251	0.2043	0.71	18.88

	Material Description	USCS	AASHTO
○			
□			
△			

Project No. **Client:** MANSFIELD HOUSING AUTHORITY

Project: PROPOSED HOUSING

○ **Source of Sample:** B-1 **Depth:** 0.50

□ **Source of Sample:** B-3 **Depth:** 2.0 **Sample Number:** 2

△ **Source of Sample:** B-5 **Depth:** 2.0 **Sample Number:** 2

Remarks:

○water content = 7.5%

□water content = 11.3%

△water content = 3.0%

CLARENCE WELTI ASSOCIATES, INC.

Figure

Particle Size Distribution Report

	% +3"	% Gravel		% Sand			% Fines	
		Coarse	Fine	Coarse	Medium	Fine	Silt	Clay
○				2.3	11.9	76.3	6.1	
□						36.2	62.5	
△				4.3	28.9	51.7	13.0	

	LL	PL	D_{85}	D_{60}	D_{50}	D_{30}	D_{15}	D_{10}	C_c	C_u
○			0.4646	0.2695	0.2286	0.1612	0.1090	0.0895	1.08	3.01
□			0.1301							
△			0.8513	0.3790	0.3026	0.1900	0.0968			

	Material Description	USCS	AASHTO
○			
□			
△			

Project No. **Client:** MANSFIELD HOUSING AUTHORITY
Project: PROPOSED HOUSING

○ **Source of Sample:** B-6 **Depth:** 2.0 **Sample Number:** 2
□ **Source of Sample:** B-8 **Depth:** 4.5
△ **Source of Sample:** B-10 **Depth:** 0.56

Remarks:
○water content = 8.5%
□water content = 25.6%
△water content = 11.9%

CLARENCE WELTI ASSOCIATES, INC.

Figure

Connecticut Water Company
93 West Main Street
Clinton, CT 06413-1600
Office: 860.669.8636
Customer Service: 800.286.5700

April 3, 2019

Kathy Dorgan
Dorgan Architecture & Planning
10 Eastwood Road
Storrs, CT 06268

Re: Water Feasibility
113-121 South Eagleville Road
Mansfield, Connecticut

Dear Ms. Dorgan:

This letter is in response to your recent inquiry regarding the Connecticut Water Company's interest in providing water service to the subject property. Domestic and fire protection water is available to the property from the 8" water main in South Eagleville Road. To provide such service, a properly engineered main extension may be required in accordance with the Regulations of Connecticut State Agencies. To meet the overall needs of your project, additional infrastructure improvements may be required at your expense.

Should a Customer Agreement for service not be executed within one year of the date of this letter, Connecticut Water reserves the right to reevaluate its ability to service this project.

As an alternative, you may be considering an on-site, domestic well. Please be advised that the Public Health Code prohibits the local Director of Health from issuing a water supply well permit for any premise located, or that will be located, on property whose boundary is within 200 feet of an existing community water system, when such distance is measured along a street, alley or easement. While the Code does provide for certain exceptions to this restriction, any such exception must be granted by the State Department of Public Health.

If you have questions, please feel free to call me at (860) 664-6137.

Respectfully,

Kevin Schwabe
Developer Services Coordinator

Record and return to:
Shipman & Goodwin LLP
One Constitution Plaza
Hartford, CT 06103
Attn: Mary Jo Andrews, Esq.

DRAINAGE EASEMENT

KNOW ALL PERSONS BY THESE PRESENTS, that **CT LIBERTY GROUP LLC,** a Connecticut limited liability company with a place of business in the Town of Prospect, Connecticut (the "Grantor") for the consideration of One Dollar ($1.00) and other valuable consideration received to its full satisfaction of **THE MANSFIELD NONPROFIT HOUSING DEVELOPMENT CORPORATION**, a Connecticut corporation with a place of business in the Town of Mansfield, Connecticut (the "Grantee") does hereby give, grant, bargain, sell and confirm unto the Grantee, its successors and assigns forever, the perpetual right, privilege and easement to construct, build, install, maintain, alter, repair, replace, clean, reconstruct and inspect at all times drains, pipes, and other improvements or appurtenances customary or useful in connection with drainage rights, upon, over, under and across the easement area on land of the Grantor commonly known as 101 South Eagleville Road, Mansfield, Connecticut, which easement area is more particularly described on Schedule A attached hereto and made a part hereof (the "Easement Area").

Together with the right to drain and discharge storm and surface waters onto and from the Easement Area and to flow said waters over and across the surface of land adjacent to the Easement Area in order to maintain an unobstructed flow of said waters from the Easement Area.

Together with the right to regrade the Easement Area and keep the Easement Area free of trees, bushes and other obstructions and to perform all work necessary for such drainage purposes.

Together with the right to use the Easement Area for construction and maintenance of buildings and improvements along the southerly boundary of the adjacent parcel of land owned by Grantee and commonly known as 113-121 South Eagleville Road, Mansfield, Connecticut.

Grantee shall notify Grantor in writing at least three (3) days (but not more than seven (7) days) prior to commencing any work within the Easement Area and shall make every effort to perform such work in a fashion which will be least intrusive to Grantor as possible.

Grantee shall indemnify, defend, and hold Grantor harmless from and against any and all losses, costs, damages, liens, claims, liabilities, or expenses (including, but not limited to, reasonable attorneys' fees, court costs, and disbursements), including third party claims, incurred by Grantor arising from or by reason of Grantee's access to, or use of the Easement Area or Grantee's exercise of the easement rights herein granted.

The Grantor, for itself and its successors and assigns, covenants and agrees that no structures or other improvements shall be erected or installed within the limits of the Easment Area and that there shall be no filling, flooding, grading or excavating within the Easement Area.

The Grantor reserves to itself and its successors and assigns the right to use the Easement Area for any use and purpose which does not in any way interfere with the use of the Easement Area by the Grantee, its successors and assigns, in the exercise of the easement rights herein granted.

By the acceptance of this grant the Grantee covenants and agrees, for itself and its successors and assigns, to restore the Easement Area to substantially the same condition the Easement Area was in prior to the time of the exercise of any of the easement rights herein granted, exclusive of such changes as are permitted to be made by Grantee by the terms hereof.

The above-granted easement rights are contingent on the Mansfield Planning and Zoning Commission voting as a condition of site plan approval for a 42 dwelling unit development at 113-121 South Eagleville Road, Mansfield, that the use of the Easement Area for drainage purposes will not impair the future designation of the Easement Area as open space in any development application for 101 South Eagleville Road, Mansfield.

TO HAVE AND TO HOLD the above-granted easement unto the Grantee and its successors and assigns forever, to its and their own proper use and behoof.

[signature page follows]

IN WITNESS WHEREOF, the Grantor has caused this easement to be executed as of the 13 day of Nov, 2019.

Signed, sealed and delivered
in the presence of:

Sherry VanHaften

CT LIBERTY GROUP LLC

By: _____
Yitz Rabinowitz
Its Manager

STATE OF CONNECTICUT)
) ss. Waterbury
COUNTY OF New Haven

The foregoing Instrument was acknowledged before me, this 13th day of November, 2019, by Yitz Rabinowitz, Manager of CT Liberty Group LLC, a Connecticut limited liability company, on behalf of said limited liability company.

Sherry G. VanHaften

Commissioner of the Superior Court
Notary Public
My Commission Expires:

SHERRY G. VAN HAAFTEN
NOTARY PUBLIC
CONNECTICUT
MY COMMISSION
EXPIRES MAY 31, 2024

8047389v5

SCHEDULE A

[Attached drawing to be replaced by legal description based on survey of Easement Area.]

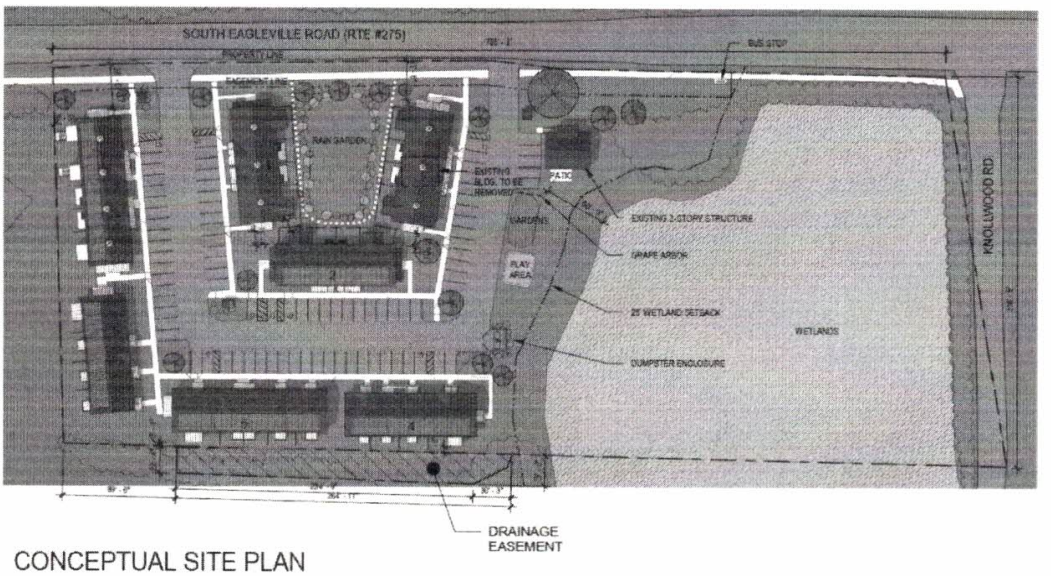

CONCEPTUAL SITE PLAN
SCALE: 1"=80'-0"

8047389v5

Town File Number: WEB-42708917

NOTIFICATION TO WINDHAM WATER WORKS

For Mansfield Projects within the Willimantic Reservoir Watershed

Sections 8-3i and 22a-42f of the State Statutes require applicants to provide to all water companies written notice of an application, petition, request or plan if the proposed project is located within the watershed of their public drinking supply. **The applicant must mail such notice within seven (7) days of the date of the application, by certified mail, return receipt requested.** To meet this requirement, this form shall be used by applicants in Mansfield for projects within the Willimantic Reservoir Watershed. To determine if a project is within the reservoir watershed, please consult map(s) on file in the Planning Office. **Failure of an applicant to comply with this statutory requirement may be grounds for a claim of procedural error ad a successful legal challenge of the decision rendered on the application.**

Application Submitted to:
(Check one or more)

- [x] Inland Wetlands Agency
- [x] Planning and Zoning Commission
- [ ] Zoning Board of Appeals

Type of Application:

- [x] Zone Change
- [ ] Subdivision
- [ ] Variance
- [ ] Special Exception/Permit
- [x] Inland Wetland/Watercourses License
- [ ] Other (Describe)

Applicant Mansfield Non-Profit Housing Dev Corp
(please **PRINT**)

Signature

Street Address 309 Maple Road Telephone (860) 487-0693

Town Storrs, CT Zip code 06268

Project Street Location/Nearest Utility Pole 113-121 S. Eagleville Rd, Storrs, CT

Contact Person Rebecca Fields Telephone (860) 487-0693 x5

Brief description of application (For example: 10 lot subdivision of single family homes with on-site septic systems and wells)

New housing development that includes 42 units within 7 new buildings and the renovation of one existing building. New access drives and off-street parking to support the units. Connections to public water and sewer facilities.

Public Hearing Date: _____ Commission/Agency Meeting Date(s) 12/3/2019
(If Applicable)

Enclose a copy of the application submitted to the Town and a full set of project plans. Mail this completed form by certified mail, return receipt requested, to:

Windham Water Works-Superintendent
174 Storrs Road
Mansfield Center, CT 06250

PZC File Number: _____

SITE PLAN CHECKLIST

Department of Planning and Development ▪ 4 South Eagleville Road ▪ Storrs-Mansfield, CT 06268
planzonedept@mansfieldct.org ▪ 860.429.3330

Project Name (different from Project Address): Eagleville Green

Project Address: 113-121 South Eagleville Road

Applicant's Name: Mansfield Nonprofit Housing Development Corp.

COMPLETED	NOT APPLICABLE	WAIVER REQUESTED	REQUIREMENT	
			1.	**GENERAL PLAN STANDARDS-ALL SHEETS**
			A.	**Plan Quality**
⊙	○	○	1.A.1	Plans shall be of sufficient detail and professional quality to enable comprehensive review.
			B.	**Print/Digital Submission Requirements**
○	⊙	○	1.B.1	Print Size of 8 ½" by 11" or 11" by 17" **(15 copies)**
⊙	○	○	1.B.2	Print Size of 24" by 36" **(3 copies)**
⊙	○	○	1.B.3	Digital files provided in pdf format and sized to no larger than 11" by 17". Please submit the pdf of the Site Plan as one single file (do not break out the individual pages)
			C.	**Plan Information**
⊙	○	○	1.C.1	Date the plan was prepared **and** last revised
⊙	○	○	1.C.2	Name, address, signature, and registration number of professional(s) preparing the plan on each sheet-all plans to be sealed by the appropriate professional
○	○	○	1.C.3	Approval Signature Block in Same Place on Each Sheet (Lower Left Corner)
⊙	○	○	1.C.4	Map Scale: All plans required by this checklist shall be prepared at the same scale as the Existing Conditions Map
⊙	○	○	1.C.5	Map Scale: Scale no less than 1": 40' with scale identified in the same place on each sheet; 1": 20' or 1": 30' preferred
⊙	○	○	1.C.6	Dimension Labels: Dimensions (including but not limited to buildings, structures, setbacks, driveways, parking spaces, and landscape areas)
⊙	○	○	1.C.7	Symbols: North point consistently shown in same direction on all plan sheets. North arrow pointing down is not acceptable.
⊙	○	○	1.C.8	Symbols: Legend of Symbols, patterns and abbreviations used

PZC File Number: _____

COMPLETED	NOT APPLICABLE	WAIVER REQUESTED	REQUIREMENT	
			2	**COVER SHEET**
			A.	**General Information**
⊙	○	○	2.A.1	Name and address of the developer and owner(s) of record
⊙	○	○	2.A.2	Location Map with the site shown in relation to the nearest intersection of two or more streets (Scale of 1" = 1,000 feet)
⊙	○	○	2.A.3	Sheet Index
○	⊙	○	2.A.4	Key to plan sheets if more than one sheet is needed to show the entire site
			3	**PROJECT INFORMATION** *Where a Development Impact Statement (DIS) is provided, this information may be provided as part of the DIS instead.*
			A.	**Area Tabulations (shown in square feet and acres)**
⊙	○	○	3.A.1	Total area of Parcel (acres)
⊙	○	○	3.A.2	Steep Slopes-15% or greater (acres)
⊙	○	○	3.A.3	Wetlands, watercourses and waterbodies (acres)
○	⊙	○	3.A.4	Special Flood Hazard Areas-100 Year Floodplain (acres)
○	⊙	○	3.A.5	Area subject to restrictions that prohibit development-i.e. conservation easements (acres)
⊙	○	○	3.A.6	Total Buildable Area (as defined in Regulations)
⊙	○	○	3.A.7	Volume of earth materials to be brought to the site (cubic yards)
⊙	○	○	3.A.8	Volume of earth materials to be removed from the site (cubic yards)
⊙	○	○	3.A.9	Volume of earth materials to be moved from one location to another on the site (cubic yards)
⊙	○	○	3.A.10	Existing and proposed impervious surface area (square feet or acres; percentage of total site)
⊙	○	○	3.A.11	Existing and proposed effective (connected) impervious cover (square feet or acres; percentage of total site)
⊙	○	○	3.A.12	Total area that will be disturbed during construction (square feet or acres; percentage of total site)
			B.	**Existing Permits/Approvals and Concurrent Applications**
○	⊙	○	3.B.1	List of all existing Special Permits, Site Plans, Variances and other local or state approvals that exist for the site
○	⊙	○	3.B.2	List of all Special Permits, Site Plans, Variances and other local or state approvals being requested
○	⊙	○	3.B.3	List of modifications requested to existing permit approvals

PZC File Number: _____

COMPLETED	NOT APPLICABLE	WAIVER REQUESTED	REQUIREMENT	
			C.	**Zoning Data** *For each element, identify existing conditions, what is required by the Regulations, and what is proposed*
⦿	○	○	3.C.1	Zoning District(s) applicable to the property
⦿	○	○	3.C.2	Land Use(s)
⦿	○	○	3.C.3	Lot Area
⦿	○	○	3.C.4	Number of dwelling units (including bedrooms/unit)
⦿	○	○	3.C.5	Residential Density (dwelling units per buildable acre as defined by regulations)
⦿	○	○	3.C.6	Number and Type of Affordable and Workforce Housing Units
⦿	○	○	3.C.7	Gross Square Feet of Building Area (Total)
⦿	○	○	3.C.8	Gross Square Feet of Building Area-By Use
⦿	○	○	3.C.9	Open Space (Total and by Type)
⦿	○	○	3.C.10	Building Height
⦿	○	○	3.C.11	Building Setbacks
⦿	○	○	3.C.12	Lot Frontage
⦿	○	○	3.C.13	Parking Spaces (Total and by type-standard, accessible, motorcycle/scooter)
⦿	○	○	3.C.14	Parking Space Calculations for projects with multiple uses and proposed parking credits
⦿	○	○	3.C.15	Loading Spaces
			4.	**CONTEXT PLAN**
⦿	○	○	4.A	Clearly label project site
⦿	○	○	4.B	Display properties within 500 foot radius of project site
⦿	○	○	4.C	Identify names and addresses of all property owners within 500 feet of subject property
⦿	○	○	4.D	Identify any adjacent properties in the same ownership or under control of the applicant.
⦿	○	○	4.E	At minimum, display and label the following features: property lines, buildings, zoning districts, streets, transit stops and routes, open space and recreation areas, watercourses and Level A Aquifer Protection Areas.
			5.	**EXISTING CONDITIONS MAP**
			A.	**General Requirements**
⦿	○	○	5.A.1	Existing Conditions Map prepared in conformance with A-2 standards by Surveyor licensed in the State of CT
⦿	○	○	5.A.2	Existing easements, including but not limited to: conservation, drainage, access
			B.	**Access and Circulation**
⦿	○	○	5.B.1	Sidewalks and streets (show full width, curb lines and centerlines)

PZC File Number: _____

COMPLETED	NOT APPLICABLE	WAIVER REQUESTED	REQUIREMENT	
⊙	○	○	5.B.2	Rights-of-Way-identify full right-of-way width of adjoining streets and required highway clearance setbacks pursuant to Zoning Regulations
⊙	○	○	5.B.3	Roadway and lane widths/designations (right turn, left turn, etc.)
⊙	○	○	5.B.4	Traffic and pedestrian controls including signs, marking and signals
○	⊙	○	5.B.5	Existing transit/bus stops adjacent to the property (including transit provider)
○	⊙	○	5.B.6	On-street parking locations and individual spaces when designated
⊙	○	○	5.B.7	Driveways, entrances, exits, fire lanes and emergency vehicle access, parking areas (show spaces by type-standard, accessible, motorcycle/scooter) and indicate number in each bay and total count. Dimensions shall exclude any obstructions such as columns or light poles.
			C.	**Property Information**
⊙	○	○	5.C.1	Property lines, including adjoining property lines
⊙	○	○	5.C.2	Course and distance of property lines
			D.	**Buildings and Structures**
⊙	○	○	5.D.1	Existing buildings and structures, including fences and walls
⊙	○	○	5.D.2	Building setbacks
			E.	**Cultural Features**
○	⊙	○	5.E.1	National, State or Local Historic Designations (site and adjacent parcels)
○	⊙	○	5.E.2	Historic features, including but not limited to old foundations, dams, sluiceways, mill races, rip-rapping, wells and other utility features, walks, paths, hitching posts and former gardens, arbors or enclosed areas.
○	⊙	○	5.E.3	Archaeological features, including whether the site is located within an area of sensitivity or pre-historic site area pursuant to Map 4.1 of the Mansfield Tomorrow POCD
			F.	**Utilities and Infrastructure**
⊙	○	○	5.F.1	Transformers, ground level mechanical units, switch boxes, cable boxes poles, telephone pedestals, valves, overhead lines and other surface features of utility systems
○	⊙	○	5.F.2	Wells-on-site and within 500 feet of the site
○	⊙	○	5.F.3	Septic system (including primary and reserve leaching fields)
⊙	○	○	5.F.4	Water mains, sanitary sewer systems, gas mains/lines, and stormwater systems indicating line sizes; direction of flow for storm and sanitary lines; and owner of each system
⊙	○	○	5.F.5	Other buried utilities (electric, cable, etc) including owner of each system

PZC File Number: _____

COMPLETED	NOT APPLICABLE	WAIVER REQUESTED	REQUIREMENT	
⦿	○	○	5.F.6	Underground and above-ground storage tanks
⦿	○	○	5.F.7	Fire hydrants and Fire Department connections
			G.	**Natural Systems**
⦿	○	○	5.G.1	Topography shown with no less than 5 foot contours on the subject property and on adjacent parcels for sufficient distance to indicate the relationship of the site to off-site terrain; highlight areas of slopes greater than 15% and label percent slope.
⦿	○	○	5.G.2	Slopes, terraces and retaining walls, including elevations of level areas and tops and bottoms of walls and exterior stairways and ramps
⦿	○	○	5.G.3	Significant Site Features (exposed ledge, areas shallow to bedrock, rock outcroppings, viewpoints, etc.) Depending on the nature of a proposal, an on-site soil survey by a registered soil scientist may be required.
○	⦿	○	5.G.4	Groundwater features including stratified drift aquifers
○	⦿	○	5.G.5	Level A Aquifer Protection Areas
⦿	○	○	5.G.6	Surface water features, including but not limited to: watercourses, bodies of water, wetlands (field delineated by soil scientist) and required upland review area; and limits of special flood hazard areas (100 year floodplain)
⦿	○	○	5.G.7	Major Trees (9“ or more in caliper) and shrubs (3 ft) or more in height, located and identified by species, including street trees on public rights-of-way along property frontage.
⦿	○	○	5. G.8	Soil types
			H.	**Open Space and Recreation**
⦿	○	○	5.H.1	Recreation areas, trails, and public access easements on site and adjoining properties
			I.	**Environmental Concerns**
⦿	○	○	5.I.1	Area of known or suspected contamination or narrative of site history if none expected
○	⦿	○	5.I.2	Areas located within 1,000 feet of a former landfill, dump or disposal area
○	⦿	○	5.I.3	Areas with potential of generating combustible gases
			6.	**PROPOSED SITE PLAN**
			A.	**General Requirements**
⦿	○	○	6.A.1	Include existing features to be retained and show location, dimension, size, height and elevation of proposed changes
⦿	○	○	6.A.2	Proposed easements, including but not limited to: conservation, drainage, access
⦿	○	○	6.A.3	Construction details and specifications

PZC File Number: _____

COMPLETED	NOT APPLICABLE	WAIVER REQUESTED	REQUIREMENT	
			B.	**Natural Systems, Proposed Grading and Drainage**
⊙	○	○	6.B.1	Limits of Disturbance
⊙	○	○	6.B.2	Surface water features, including but not limited to: watercourses, bodies of water, wetlands (field delineated by soil scientist) and required upland review area; and limits of special flood hazard areas (100 year floodplain)
⊙	○	○	6.B.3	Proposed grading shown with 2' contours on the subject property and on adjoining parcels for sufficient distance to indicate the relationship of the site to off-site terrain
⊙	○	○	6.B.4	Slopes, terraces and retaining walls, including elevations of level areas and tops and bottoms of walls and exterior stairways and ramps
⊙	○	○	6.B.5	Erosion and Sedimentation Control Measures (See Regulations for requirements)
○	⊙	○	6.B.6	Areas to be protected by conservation easements
			C.	**Proposed Buildings and Structures**
⊙	○	○	6.C.1	Required Building Setback lines
⊙	○	○	6.C.2	Proposed changes to buildings and structures, including decks and other projections such as canopies, bay projections, and roof overhangs (using outside dimensions)
⊙	○	○	6.C.3	Distances between buildings and adjoining property lines
⊙	○	○	6.C.4	Locations of building entrances and exits
○	⊙	○	6.C.5	Existing and proposed fences and walls, including details
			D.	**Proposed Access and Circulation**
⊙	○	○	6.D.1	Changes to roadway and lane widths/designations (right turn, left turn, bicycle, etc.)
⊙	○	○	6.D.2	Traffic and pedestrian controls including signs, marking and signals
○	⊙	○	6.D.3	Bus stops adjacent to the property (including transit provider) and bus stop amenities
○	⊙	○	6.D.4	On-street parking locations and individual spaces when designated
⊙	○	○	6.D.5	Driveways, entrances, and exits including slope (entrances/exits only), fire and emergency vehicle access and vehicle turning movements. Vehicle turning movements for loading areas shall be based on the largest vehicle that will access the site.
⊙	○	○	6.D.6	Sight distance per AASHTO at all driveways and street intersections
⊙	○	○	6.D.7	Curb radii at intersections, driveway entrances, and within parking lots; note AASHTO turning radii.

COMPLETED	NOT APPLICABLE	WAIVER REQUESTED	REQUIREMENT	
				Town can provide ladder truck specifications for projects where ladder truck access will be needed
⦿	○	○	6.D.8	Direction of traffic for all driveways and intersections
⦿	○	○	6.D.9	Traffic volumes at all site entrances, exits and intersections
⦿	○	○	6.D.10	Parking areas (show spaces by type-standard, accessible, motorcycle/scooter, bicycle) and indicate number in each bay and total count. Dimensions shall exclude any obstructions such as columns or light poles.
○	⦿	○	6.D.11	Details and specifications for bicycle parking
			E.	**Proposed Changes to Open Space and Recreation Areas**
⦿	○	○	6.E.1	Open space, recreation areas, recreation facilities/improvements, trails, and public access easements on site and adjoining properties
			F.	**Proposed Changes to Utilities and Infrastructure**
⦿	○	○	6.F.1	Transformers, ground level mechanical units, switch boxes, cable boxes poles, telephone pedestals, valves, overhead lines and other surface and subsurface features of utility systems
○	⦿	○	6.F.2	Well(s)
○	⦿	○	6.F.3	Septic system (including primary and reserve leaching fields), including locations and findings of all test pits, borings and percolation tests
⦿	○	○	6.F.4	Public water systems, sanitary sewer systems, natural gas, and stormwater systems indicating: owner of each system, mains and service lines; line sizes; direction of flow for storm and sanitary lines. Details and specifications for each system shall be provided in plan view.
⦿	○	○	6.F.5	Location, specifications and details for Low Impact Development (LID) stormwater management practices, including but not limited to: bioretention areas, bioswales, raingardens, roof leader drains, cisterns, permeable pavement, and green roofs.
⦿	○	○	6.F.6	Above-ground and underground utilities (electric, cable, etc) including owner of each system
○	⦿	○	6.F.7	Underground and above-ground storage tanks
⦿	○	○	6.F.8	Fire hydrants, water mains, service lines and Fire Department connections, with size of line and owner indicated
⦿	○	○	6.F.9	Waste recycling and disposal storage/pick-up areas including details regarding container size, pad, screening, drainage, and truck turning movements

PZC File Number: _____

COMPLETED	NOT APPLICABLE	WAIVER REQUESTED	REQUIREMENT	
			G.	**Lighting Plans**
⦿	○	○	6.G.1	Location of all existing and proposed lights, including street lights and building lights, relative to buildings, structures, property lines and landscape areas
⦿	○	○	6.G.2	Fixture Types and Details, including height
⦿	○	○	6.G.3	Calculations of Allowable and Proposed Total Light Output
⦿	○	○	6.G.4	Photometric plan identifying light distribution at property lines
			7	**LANDSCAPE PLAN**
			A.	**General Requirements**
⦿	○	○	7.A.1	All landscape documents, drawing submissions, specifications and as-built documents shall be prepared, signed, sealed and dated by a Landscape Architect licensed in the State of Connecticut pursuant to Article 5, Sec. A.3.d.3.
			B.	**Calculations**
⦿	○	○	7.B.1	Shade Coverage (including a graphic representation of trees included in the calculations)
⦿	○	○	7.B.2	Permeable Surface/Structural Soils
			C.	**Existing Conditions (Site and Adjoining Rights-of-Way)**
⦿	○	○	7.C.1	Limits of proposed disturbance
⦿	○	○	7.C.2	Existing vegetation including quantity, species, caliper size and height
⦿	○	○	7.C.3	Existing vegetation on adjacent sites that will be affected by proposed work/site disturbance
⦿	○	○	7.C.4	Existing vegetation to be removed including locations, size and species of all trees 9” or greater in caliper
⦿	○	○	7.C.5	Street trees and natural vegetation to be retained, including locations, approximate driplines, size and species of all trees greater than 9” in caliper
⦿	○	○	7.C.6	Location of existing and proposed fences and walls, including historic stone walls
⦿	○	○	7.C.7	Significant Site Features (rock outcroppings, viewpoints, etc.)
⦿	○	○	7.C.8	Trails (on-site and adjoining sites)
			D.	**Proposed Changes to Landscape**
⦿	○	○	7.D.1	Location and dimensions of areas to be landscaped (including within public rights-of-way), specifying the location, quantity, names, caliper and size of proposed individual trees, shrubs, and ground cover plants. (Indicate initial and final height for trees and shrubs, initial width for shrubs, and initial spread for groundcover plants)

PZC File Number: _____

COMPLETED	NOT APPLICABLE	WAIVER REQUESTED	REQUIREMENT	
⊙	○	○	7.D.2	Plant legend/index or schedule that indicates the species, whether the species is native to the Northeast US, character, height/spread, size and total quantity of all plantings at time of installation
⊙	○	○	7.D.3	Grass areas and limits, including identification of sod and/or seed areas
⊙	○	○	7.D.4	Slope areas in excess of four to one (4:1) or 25%
⊙	○	○	7.D.5	Drainage ways, yard inlets, area drains, overflow areas and LID stormwater practices
⊙	○	○	7.D.6	Existing and proposed location of above and below grade site utilities and service connections including Fire Department connections, easements and access requirements
⊙	○	○	7.D.7	Location and direction of service openings on above grade utilities such as transformers, telephone, air conditioning/heating units and cable boxes. Specifically indicate perimeter clearance/safety zone.
⊙	○	○	7.D.8	Location of landscape accessories and furnishings (i.e. tree grates, temporary/movable planters, benches, trash/recycling containers, street and site lighting, etc.)
⊙	○	○	7.D.9	Location of landscape irrigation system elements (above and below ground).
⊙	○	○	7.D.10	Sight-distance restrictions
⊙	○	○	7.D.11	Proposed streetscape, including street tree species, locations, separation distances between trees, and furnishings
⊙	○	○	7.D.12	Location of existing and proposed fences and walls
			E.	**Details**
⊙	○	○	7.E.1	Measures to protect existing vegetation to be preserved or relocated
⊙	○	○	7.E.2	Planting details including dimensioned design sections and specifications for all proposed work, including location, details and specifications for all ground-level work, tree wells, landscape strips, and plantings above structure (roof gardens).
⊙	○	○	7.E.3	Specifications and details for landscape accessories and furnishings
○	⊙	○	7.E.4	Specifications and details for landscape irrigation system
○	⊙	○	7.E.5	Fences and wall details

PZC File Number: _____

Waiver Requests

Pursuant to Article 5, Sections A.4 and B.4 of the Mansfield Zoning Regulations, the Planning and Zoning Commission may waive certain site plan requirements where they determine such information is not needed to determine compliance with the Regulations. Please complete the following information for any waiver requested. Attach additional pages as necessary.

Note: Waivers of requirement 4.A (survey prepared to A-2 standards) shall not be granted for applications involving new principal buildings or major additions or for applications where A-2 survey data is required to verify compliance with the Regulations.

Requirement Number	Justification for Waiver

Signature of professional certifying that the submission meets all requirements

I, Robert Newton, P.E. (print name), hereby certify that the drawings and other materials that accompany this checklist have met the requirements of this checklist, and the accompanying electronic copy is an exact duplicate of the hard copy submission.

Signature _____ Date 2/4/2020

Environmental Impact Evaluation (EIE) for Proposed Hockey Arena

Posted on February 14, 2020 by smv96002

Notice of Environmental Impact Evaluation (EIE)
University of Connecticut
Ice Hockey Arena Development Project

Municipality where project is proposed: Mansfield

Address of Possible Project Location(s): 509 Jim Calhoun Way

Project Description: The University is planning construction of a new ice hockey arena and associated surface parking on approximately 12.5 acres south of Jim Calhoun Way and west of the Mark Edward Freitas Ice Forum on its main campus in the Storrs section of Mansfield, Connecticut. The site is about half developed today and consists primarily of a surface parking lot (Lot I), storm water conveyance, some wetlands, and rolling, wooded uplands.

In 2014, UConn's Division 1 Men's and Women's ice hockey teams joined the Hockey East conference. Because the current Freitas Ice Forum is too small and does not meet Hockey East standards and requirements to host UConn's men's hockey games, UConn has played most of its men's home hockey games in the XL Center in Hartford since the 2014-2015 season. The Hockey East Association requires teams in the conference to have on-campus facilities with at least 4,000 seats along with other amenities, however UConn has obtained permission from Hockey East to build a venue with lower seating capacity.

The proposed development will include:

- Facilities adhering to NCAA Division I Ice Hockey requirements, Hockey East Conference standards, and University guidelines and requirements
- Up to 3,500 seats, with up to 50% seat-back chairs; the balance being bleachers
- Locker rooms and office space
- Site improvements and parking for up to 700 vehicles

Construction is currently planned to commence in fall 2020, with a targeted opening date in fall 2022. The new arena would adhere to University design guidelines and performance standards for new construction.

The University has prepared an Environmental Impact Evaluation (EIE) to further evaluate the potential environmental impacts of the Proposed Action, as well as other alternatives, including the No Action alternative.

Project Maps: Click here to view a map of the approximate project location. Click here to view a conceptual site plan for the proposed Ice Hockey Arena Development Project.

Comments on this EIE will be accepted until 5 pm on Friday, April 3, 2020

The public may view a copy of the EIE:

- Online here
- Mansfield Town Clerk's Office, 4 South Eagleville Road, Mansfield, CT
- Mansfield Public Library, 54 Warrenville Road, Mansfield, CT

A public meeting will be held on Friday, March 27, 2020

TIME: 10 am-12 pm (Doors will open at 9:30 am to allow review of informational materials)

PLACE: Konover Auditorium at the Thomas J. Dodd Research Center, 405 Babbidge Road, Storrs, CT. Public parking is available in the South Garage, 2366 Jim Calhoun Way, Storrs, CT, adjacent to the UConn Bookstore on Hillside Road.

NOTES: The event will be streamed live online. Links to the live stream and recording will be available at http://updc.uconn.edu as the date of the meeting approaches.

Questions and comments regarding this EIE and its public meeting may be sent to:

Name: John Robitaille, Sr. Project Manager
Agency: University Planning, Design & Construction
Address: 31 LeDoyt Road, Unit 3038, Storrs, CT 06269
Email: john.robitaille@uconn.edu
Phone: (860) 486-3117

What happens next: The University will review the comments received and may conduct further environmental study and analysis or amend the evaluation. The University will then prepare responses to the substantive issues raised in review of and comment on the environmental impact evaluation and any supplemental materials or amendments. Those responses and all supplemental materials and comments shall be made available in a “Record of Decision” which will appear in the Environmental Monitor for public inspection.

TOWN OF MANSFIELD

Paul M. Shapiro, Mayor

AUDREY P. BECK BUILDING
FOUR SOUTH EAGLEVILLE ROAD
MANSFIELD, CT 06268-2599
(860) 429-3330
Fax: (860) 429-6863

June 25, 2019

Mr. John Robitaille
Senior Project Manager
University Planning, Design and Construction
31 LeDoyt Road, U-3038
Storrs, Connecticut 06269-3028

Via Email: john.robitaille@uconn.edu

Subject: Hockey Arena Scoping

Dear Mr. Robitaille:

The Mansfield Town Council and Planning and Zoning Commission (PZC) offer the following comments and recommendations with regard to the proposed Hockey Arena for consideration during the preparation of the Environmental Impact Evaluation (EIE) for the project.

- *Wetlands.* Based on the information provided in the scoping materials, it appears that the preferred site will involve significant direct wetland impacts. We strongly encourage the University to seek ways to reduce these direct impacts as well as provide substantial mitigation of any resulting impacts. To assist in these efforts, we recommend that the University consult with the Town's Environmental Planner and Conservation Commission during the preparation of the Environmental Impact Evaluation with regard to potential mitigation measures.

- *Stormwater.* Given the preferred site's location within the Eagleville Brook watershed, the significant expansion of surface parking and the impacts that expansion will have on overall impervious cover and water quality within the brook are of significant concern. We strongly encourage considering ways to reduce the impervious footprint of the development, including but not limited to the use of Low-Impact Development and Green Infrastructure practices to improve stormwater quality and reduce impacts to the Eagleville Brook watershed.

- *Off-Campus Traffic and Parking Impacts.* We respectfully request that the intersection of Stafford Road and South Eagleville Road (Routes 32 and 275) be added to the list of primary intersections to be evaluated as part of the traffic analysis. As we have previously identified in comments submitted with regard to the athletic district improvements, the intersection of Separatist Road and South Eagleville Road (Route 275) is of particular concern and we appreciate its inclusion in the proposed traffic analysis.

Furthermore, we understand that the University plans on updating special event and game day transportation and parking plans with the introduction of this new facility. Consistent with the recommendations of the Eastern Gateways Study, we request that the University work with the Town to develop comprehensive transportation and parking management associated with special events and game days. This is particularly important given the proximity of the preferred site to residential neighborhoods and the fact that off-campus local roads provide the most convenient access to I-Lot.

If you have any questions regarding these comments, please contact Linda Painter, Director of Planning and Development.

Sincerely,

Paul M. Shapiro
Mayor

Vera Stearns-Ward
Secretary, Mansfield PZC

Cc: Town Council
Planning and Zoning Commission
Conservation Commission

Town of Mansfield
CONSERVATION COMMISSION
Meeting of 19 June 2019
Conference B, Audrey P. Beck Building
(draft) MINUTES

Members present: Quentin Kessel, Erin King, Mary Harper, Scott Lehmann, Chadwick Rittenhouse (Alt.), Michael Soares. *Members absent*: John Silander. *Others present:* Jennifer Kaufman (Wetlands Agent).

1. The meeting was **called to order** at approximately 7:05p by Chair Michael Soares. In the absence of one member, Alternate Rittenhouse was entitled to vote at this meeting.

2. Draft minutes of the meeting of 17 April 2019 and **notes** of the special meeting of 22 April 2019 were approved as written.

3. Sustainable CT: equity. Some Town activities/actions promoting equity are required for Sustainable CT certification. The Town Manager is asking Town committees to look at data in the 2018 CERC Town Profile of Mansfield and to reflect on what population groups affected by the committee's work are not being heard and what might be done to improve engagement.

The Profile reveals peculiarities of Mansfield induced by UConn's presence: a low median age of 21, a surprisingly high poverty rate of 16.8%, an Asian population of 2,870 that accounts for nearly half of this demographic in Tolland County, a high rate (65.5%) of "cost-burdened renters."

While most students are just passing through, more might be done to engage them. Students in relevant fields might be induced to join the Commission, as was Julia Rogers and (we hope) Genevieve Rigler. {Cooperating with UConn student organizations on projects such as UConnPIRG's "Save the Bees" campaign is another possibility.} Perhaps walks in the Town Parks could be designed for and promoted to Asian families. The Town website could be more inviting; there should certainly be a page soliciting volunteers for various committees and projects.

4. IWA referral: W1349-2 (Roby, 110 Brookside La). The applicant, who currently accesses his house via a right-of-way on a neighbor's property, proposes to construct a new gravel driveway across a wetland on his own property; two 18" culverts would be installed in an existing channel at the wetland's narrowest point. This is a renewal application, but differs from the initial one enough to require review. The new design involves less excavation and fill. However, instead of restoring the wetland at the existing crossing on his neighbor's property, the applicant proposes, by way of remediation, to remove Japanese barberry in 11,500 ft^2 of wetland on his property.

Lehmann asked why "no action" wasn't considered in Part E –Alternatives, given that the applicant now has a legal right-of-way to the house. Kaufman explained that he and his neighbor are adversaries in a civil action. Rittenhouse wondered what effect the proposed barberry removal would have on wetland function. Soares doubted that ridding a relatively small area of barberry would be effective, unless replanted with native species and maintained: barberry is invasive. Harper questioned the wisdom of allowing herbicide to be sprayed in the wetland, as contemplated in soil scientist Richard Zulick's report (p.3). Kaufman indicated that herbicide application in a wetland requires a permit. The Commission unanimously agreed (**motion:** Kessel, Soares) to comment that:

This project may have a significant impact on wetlands, and it is not clear that the proposed

remediation would compensate for it. Use of culverts avoids fragmenting the wetland and may maintain its hydrological function.; however, 2,300 ft^2 of wetland would be filled. The IWA should request a more detailed remediation plan that (1) considers a range of alternative actions, (2) makes a case for the preferred alternative in terms of effectively enhancing wetland function & value over time, and (3) describes just what will be done and for how long.

5. UConn ice hockey arena. UConn is proposing to construct an ice hockey arena (with seating for 2,500) adjacent to the Freitas Ice Forum on a portion what is now I-Lot (which would be enlarged to accommodate another 700 vehicles). The Town has no authority over this project, but has drafted a letter commenting on its likely negative impact on wetlands, storm-water runoff, and traffic.

Lehmann noted that a large piece of forest would be sacrificed to enlarge I-lot. Harper wondered why the Depot Campus couldn't be utilized for off-site University parking served by shuttle bus; moving parking off-campus would reduce all of the impacts of this project noted in the Town's letter. Rittenhouse suggested the wetlands in the project area be studied to ascertain whether they are isolated or connected by groundwater and to inform the design of the project; for example, could impact on wetlands be lessened by dividing the parking lot?

The Commission unanimously agreed (**motion:** Harper, Rittenhouse) to recommend that (1) a study of wetlands in the project area be undertaken to inform design of the project with a view to minimizing its impact on them and (2) use of the Depot Campus for Park & Ride be explored as a way of reducing impacts on traffic, runoff, and wetlands.

6. Conservation easement monitoring. Electronic monitoring with Survey123 is definitely worth considering.

7. Membership. It's not clear whether Genevieve Rigler has been appointed to the Commission as an Alternate.

8. Adjourned at 8:37p. The July meeting may be cancelled if there are no wetlands applications needing scrutiny.

Scott Lehmann, Secretary, 24 June 2019