THE LODGES AT STORRS
Hunting Lodge Road
Mansfield, Connecticut

Inland Wetlands & Watercourses Application

March 18, 2016
Revised 3/24/2016

DEVELOPMENT TEAM

Developer/Applicant	Storrs Lodges, LLC
Land Owner	Ponde Place, LLC
Civil and Traffic Engineer	F. A. Hesketh & Associates, Inc.
Land Surveyor	F. A. Hesketh & Associates, Inc.
Environmental Consultant	REMA Ecological Services, LLC
Landscape Architect	F. A. Hesketh & Associates, Inc.
Soil Scientist	REMA Ecological Services, LLC
Legal Counsel	Thomas Fahey, Esquire

LIST OF DRAWINGS

	Title Sheet
MA-1	Master Plan
IW-1	Inland Wetlands Plan
LA-1 thru LA-4	Layout Plan
GR-1 thru GR-4	Grading Plan
ER-1 thru ER-4	Soil Erosion & Sedimentation Control Plan
UT-1 thru UT-4	Drainage and Utility Plan
UT-5 and UT-6	Overall Utility Plan
SDD-1 and SDD-2	Site Driveway Detail
SD-1 thru SD-7	Details
NT-1	Notes
PS-1	Property Survey
A-200	Building A and B Elevations
A-100	Building A and B Lower Level Plan

David S. Ziaks P.E. #13336

F. A. Hesketh & Associates, Inc.
6 Creamery Brook, East Granby, CT 06026
Civil & Traffic Engineers · Surveyors · Planners · Landscape Architects

Phone (860) 653-8000
Fax (860) 844-8600
e-mail mail@fahesketh.com

O:\2004\04161\2016 – January\JOb102.dwg, Title Sheet, Mar. 29, 2016 – 9:32:10 AM

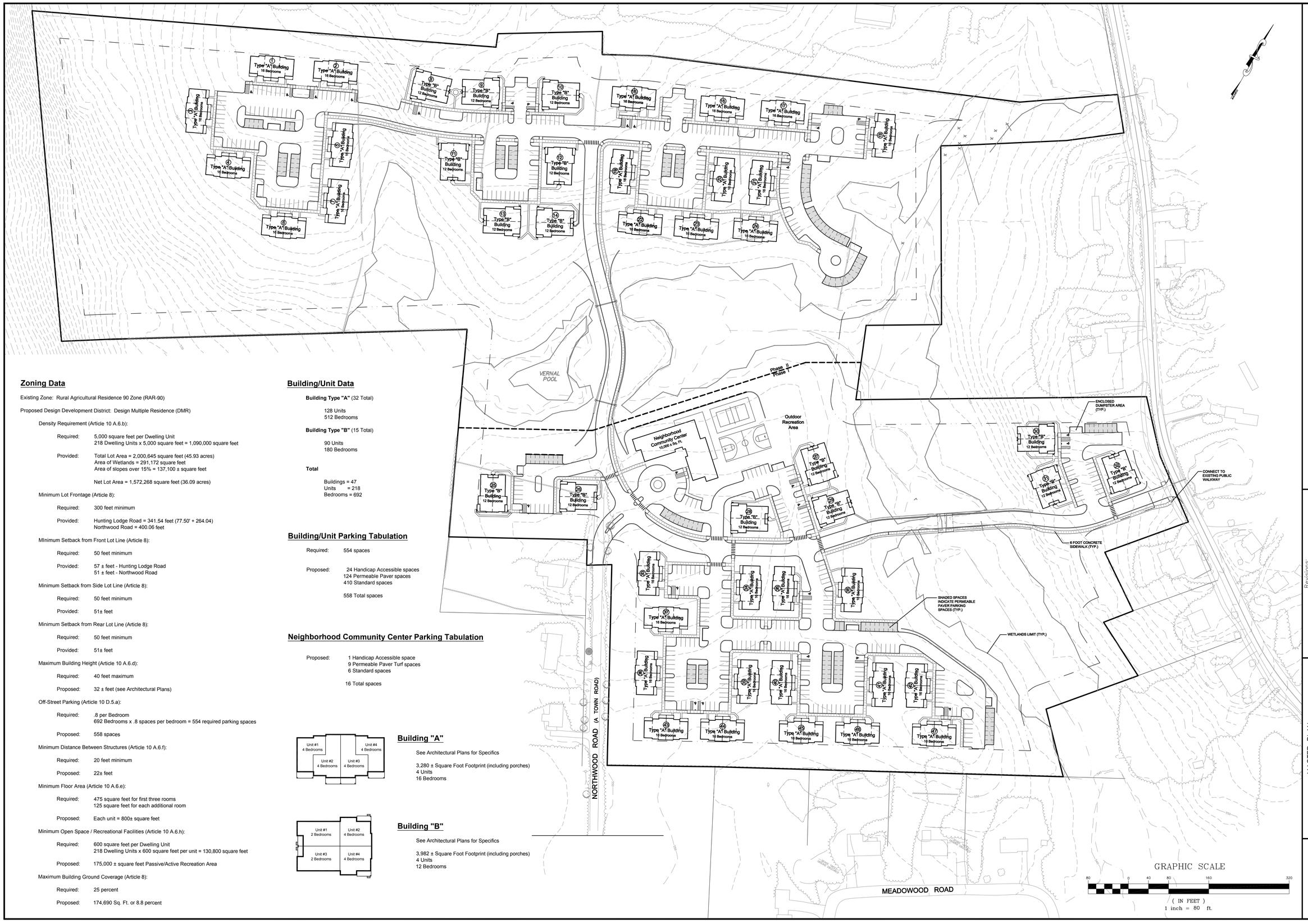

Zoning Data

Existing Zone: Rural Agricultural Residence 90 Zone (RAR-90)

Proposed Design Development District: Design Multiple Residence (DMR)

Density Requirement (Article 10 A.6.b):

Required: 5,000 square feet per Dwelling Unit
218 Dwelling Units x 5,000 square feet = 1,090,000 square feet

Provided: Total Lot Area = 2,000,645 square feet (45.93 acres)
Area of Wetlands = 291,172 square feet
Area of slopes over 15% = 137,100 ± square feet

Net Lot Area = 1,572,268 square feet (36.09 acres)

Minimum Lot Frontage (Article 8):

Required: 300 feet minimum

Provided: Hunting Lodge Road = 341.54 feet (77.50' + 264.04)
Northwood Road = 400.06 feet

Minimum Setback from Front Lot Line (Article 8):

Required: 50 feet minimum

Provided: 57 ± feet - Hunting Lodge Road
51 ± feet - Northwood Road

Minimum Setback from Side Lot Line (Article 8):

Required: 50 feet minimum

Provided: 51± feet

Minimum Setback from Rear Lot Line (Article 8):

Required: 50 feet minimum

Provided: 51± feet

Maximum Building Height (Article 10 A.6.d):

Required: 40 feet maximum

Proposed: 32 ± feet (see Architectural Plans)

Off-Street Parking (Article 10 D.5.a):

Required: .8 per Bedroom
692 Bedrooms x .8 spaces per bedroom = 554 required parking spaces

Proposed: 558 spaces

Minimum Distance Between Structures (Article 10 A.6.f):

Required: 20 feet minimum

Proposed: 22± feet

Minimum Floor Area (Article 10 A.6.e):

Required: 475 square feet for first three rooms
125 square feet for each additional room

Proposed: Each unit = 800± square feet

Minimum Open Space / Recreational Facilities (Article 10 A.6.h):

Required: 600 square feet per Dwelling Unit
218 Dwelling Units x 600 square feet per unit = 130,800 square feet

Proposed: 175,000 ± square feet Passive/Active Recreation Area

Maximum Building Ground Coverage (Article 8):

Required: 25 percent

Proposed: 174,690 Sq. Ft. or 8.8 percent

Building/Unit Data

Building Type "A" (32 Total)

128 Units
512 Bedrooms

Building Type "B" (15 Total)

90 Units
180 Bedrooms

Total

Buildings = 47
Units = 218
Bedrooms = 692

Building/Unit Parking Tabulation

Required: 554 spaces

Proposed: 24 Handicap Accessible spaces
124 Permeable Paver spaces
410 Standard spaces

558 Total spaces

Neighborhood Community Center Parking Tabulation

Proposed: 1 Handicap Accessible space
9 Permeable Paver Turf spaces
6 Standard spaces

16 Total spaces

Building "A"

See Architectural Plans for Specifics

3,280 ± Square Foot Footprint (including porches)
4 Units
16 Bedrooms

Building "B"

See Architectural Plans for Specifics

3,982 ± Square Foot Footprint (including porches)
4 Units
12 Bedrooms

THE LODGES AT STORRS

F. A. Hesketh & Associates, Inc.
6 Creamery Brook, East Granby, CT 06026
Civil & Traffic Engineers · Surveyors · Planners · Landscape Architects
Phone (860) 653-8000
Fax (860) 844-8600
e-mail mail@fahesketh.com

Revisions:

No.	Date	Description

MASTER PLAN
PREPARED FOR
STORRS LODGES, LLC
HUNTING LODGE ROAD
MANSFIELD, CONNECTICUT

Date: 03-18-2016 | Drawn by: KLL | Job no: 04161
Scale: 1" = 80' | Checked by: DSZ | Sheet no: 1 OF 1

MA-1

Q:\2004\04161\2016 - January\LODma102.dwg, MA-1, Mar. 17, 2016 - 3:49:51 PM

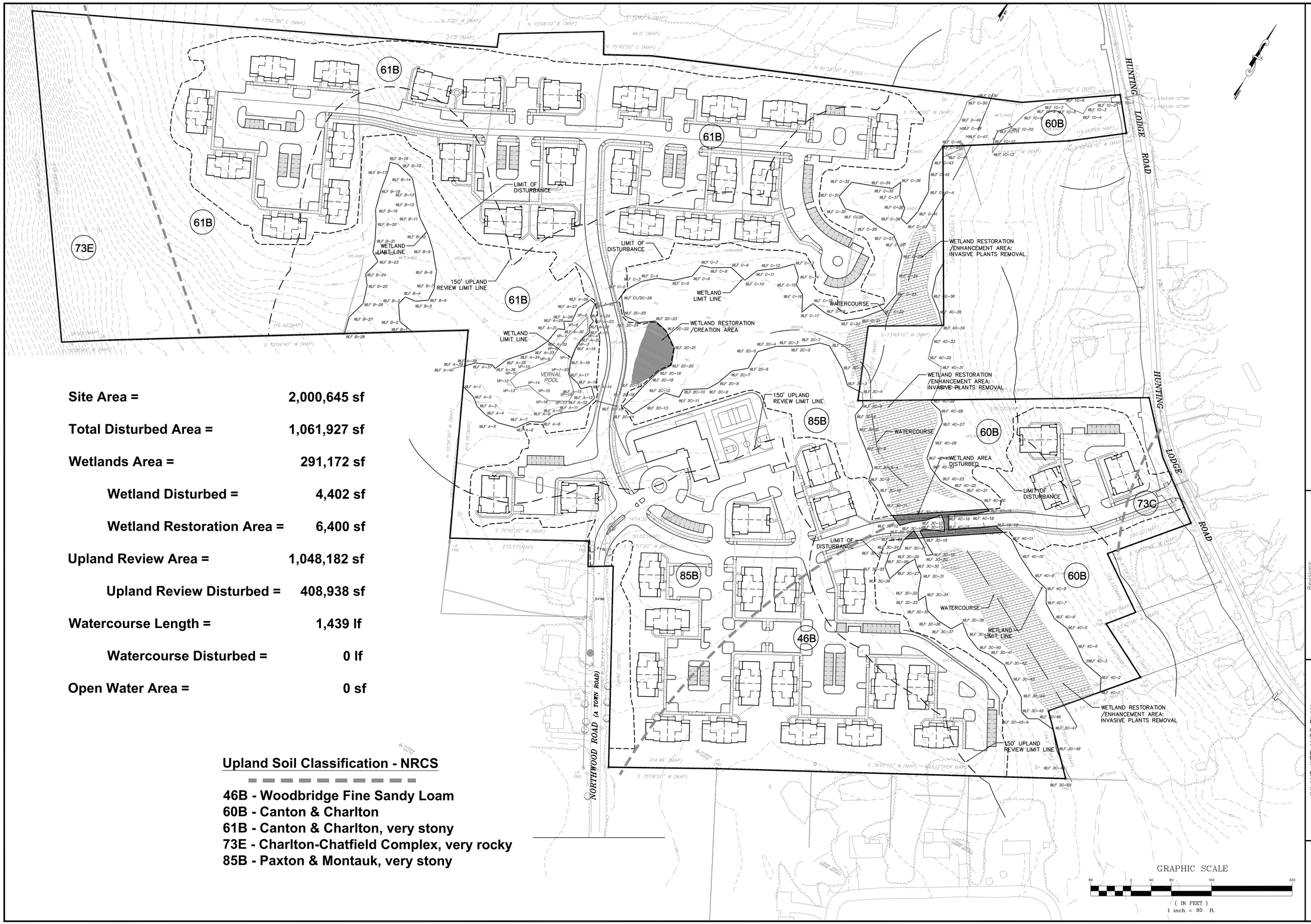

Site Area =	**2,000,645 sf**
Total Disturbed Area =	**1,061,927 sf**
Wetlands Area =	**291,172 sf**
Wetland Disturbed =	**4,402 sf**
Wetland Restoration Area =	**6,400 sf**
Upland Review Area =	**1,048,182 sf**
Upland Review Disturbed =	**408,938 sf**
Watercourse Length =	**1,439 lf**
Watercourse Disturbed =	**0 lf**
Open Water Area =	**0 sf**

Upland Soil Classification - NRCS

46B - Woodbridge Fine Sandy Loam
60B - Canton & Charlton
61B - Canton & Charlton, very stony
73E - Charlton-Chatfield Complex, very rocky
85B - Paxton & Montauk, very stony

THE LODGES AT STORRS

F. A. Hesketh & Associates, Inc.
6 Creamery Brook, East Granby, CT 06026
Civil & Traffic Engineers · Surveyors · Planners · Landscape Architects
Phone (860) 653-8000
Fax (860) 844-8600
e-mail mail@fahesketh.com

Revisions:

No.	Date	Description

INLAND WETLANDS PLAN
PREPARED FOR
STORRS LODGES, LLC
HUNTING LODGE ROAD
MANSFIELD, CONNECTICUT

Date: 03-18-16 | Drawn by: CAD | Job no: 04161
Scale: 1" = 80' | Checked by: DSZ | Sheet no: 1 OF 1

IW-1

Q:\2004\04161\2016 - January\LODIw101.dwg, IW-1, Mar. 17, 2016 - 3:46:39 PM

LA-1

LAYOUT PLAN

PREPARED FOR

STORRS LODGES, LLC

HUNTING LODGE ROAD

MANSFIELD, CONNECTICUT

Date: 03-18-2016	Drawn by: KLL	Job no: 04161
Scale: 1" = 40'	Checked by: DSZ	Sheet no: 1 OF 4

Revisions:

No.	Date	Description

THE LODGES AT STORRS

F. A. Hesketh & Associates, Inc.
6 Creamery Brook, East Granby, CT 06026
Civil & Traffic Engineers · Surveyors · Planners · Landscape Architects
Phone (860) 653-8000
Fax (860) 844-8600
e-mail mail@fahesketh.com

Q:\2004\04161\2016 - January\LODla102.dwg, LA-1, Mar. 17, 2016 - 4:14:14 PM

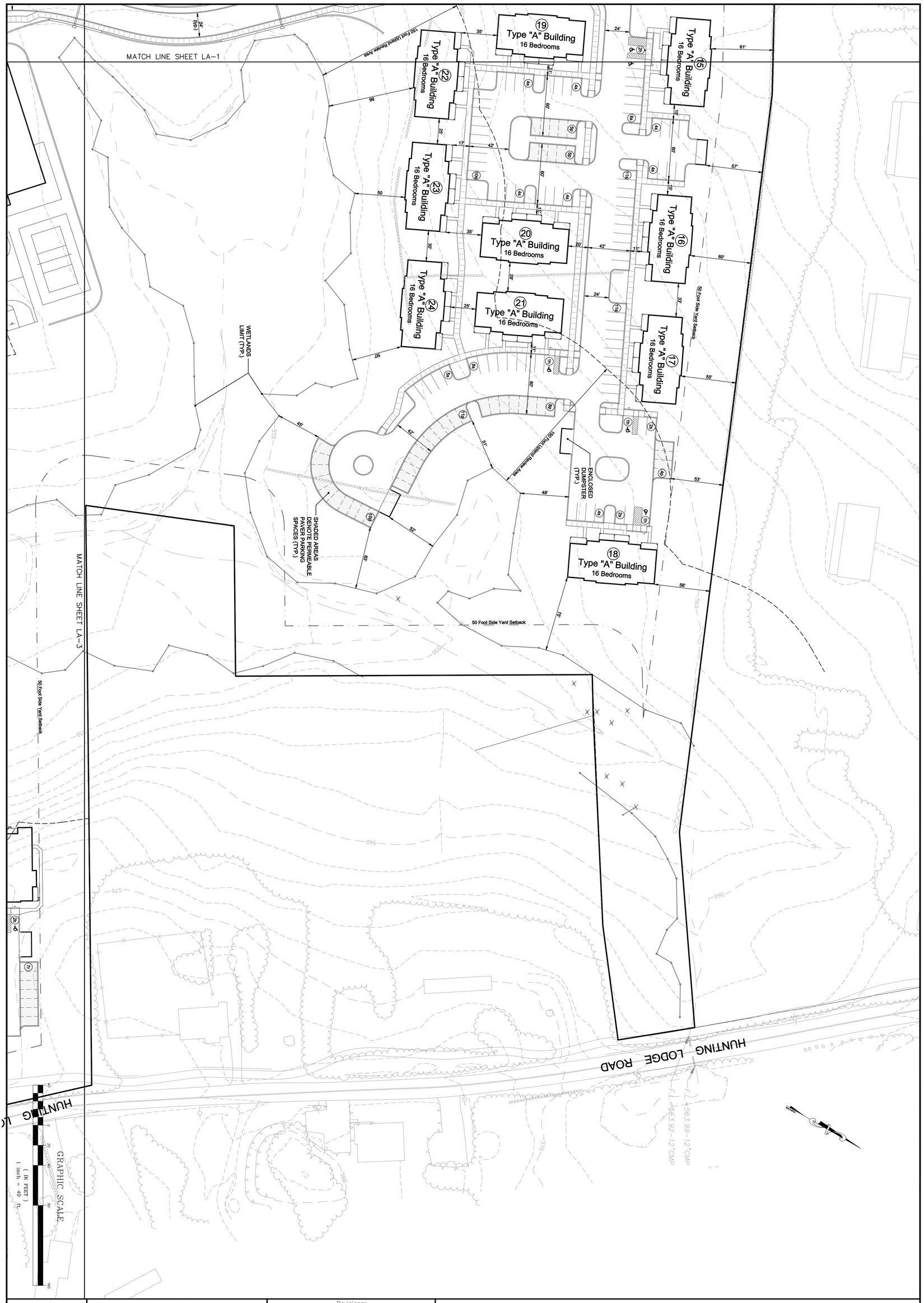

LA-2

LAYOUT PLAN
PREPARED FOR
STORRS LODGES, LLC
HUNTING LODGE ROAD
MANSFIELD, CONNECTICUT

Date: 03-18-2016	Drawn by: KLL	Job no: 04161
Scale: 1" = 40'	Checked by: DSZ	Sheet no: 2 OF 4

Revisions:

No.	Date	Description

THE LODGES AT STORRS

F. A. Hesketh & Associates, Inc.
6 Creamery Brook, East Granby, CT 06026
Civil & Traffic Engineers · Surveyors · Planners · Landscape Architects
Phone (860) 653-8000
Fax (860) 844-8600
e-mail mail@fahesketh.com

Q:\2004\04161\2016 - January\L00la102.dwg, LA-2, Mar. 17, 2016 - 4:15:42 PM

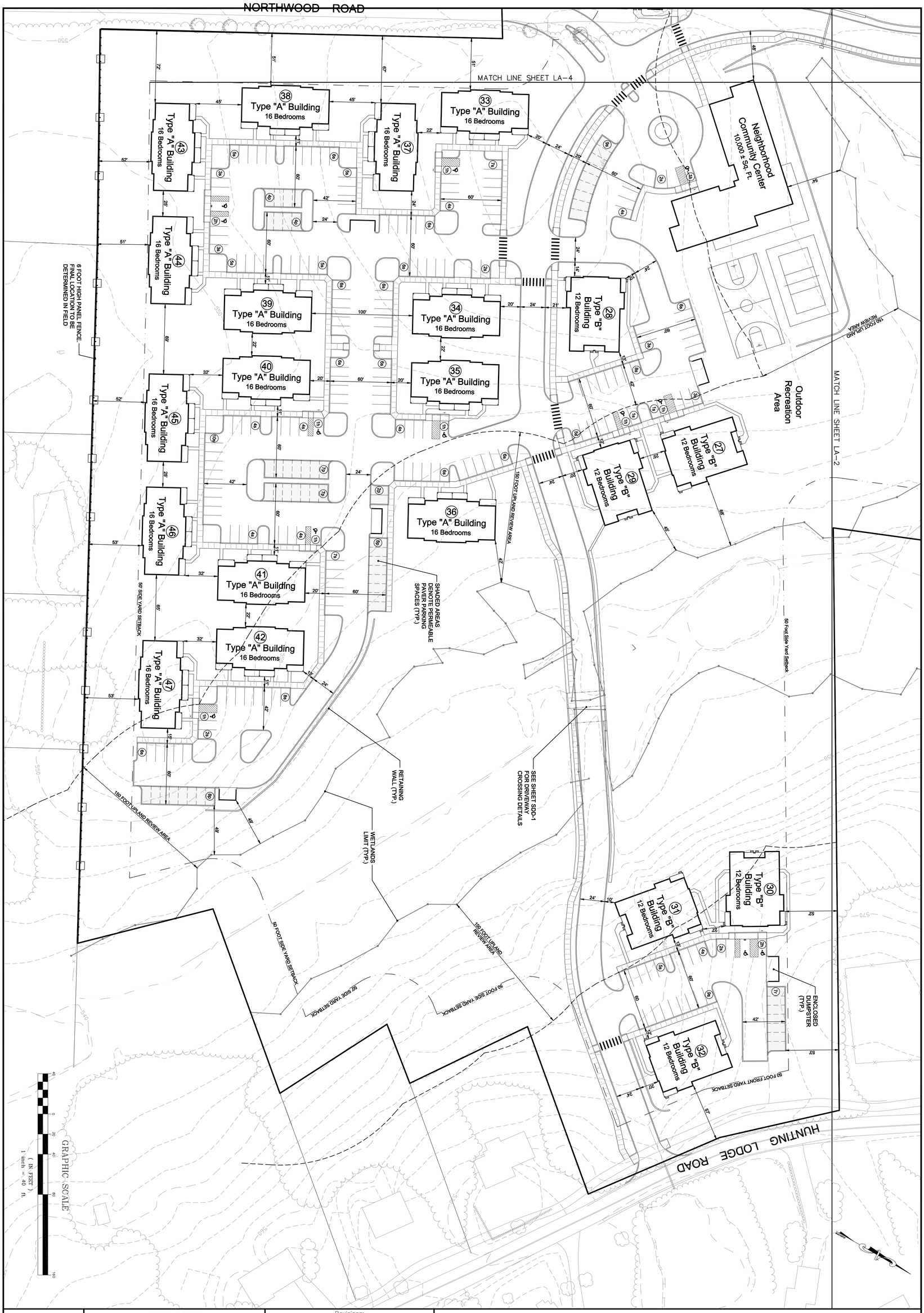

LA-3

LAYOUT PLAN
PREPARED FOR
STORRS LODGES, LLC
HUNTING LODGE ROAD
MANSFIELD, CONNECTICUT

Date: 03-18-2016	Drawn by: KLL	Job no: 04161
Scale: 1" = 40'	Checked by: DSZ	Sheet no: 3 OF 4

Revisions:

No.	Date	Description

THE LODGES AT STORRS

F. A. Hesketh & Associates, Inc.
6 Creamery Brook, East Granby, CT 06026
Civil & Traffic Engineers · Surveyors · Planners · Landscape Architects
Phone (860) 653-8000
Fax (860) 844-8600
e-mail mail@fahesketh.com

Q:\2004\04161\2016 – January\L00la102.dwg, LA-3, Mar. 17, 2016 – 4:18:51 PM

LA-4

LAYOUT PLAN

PREPARED FOR

STORRS LODGES, LLC

HUNTING LODGE ROAD

MANSFIELD, CONNECTICUT

Date: *03-18-2016*	Drawn by: *KLL*	Job no: *04161*
Scale: *1" = 40'*	Checked by: *DSZ*	Sheet no: *4 OF 4*

Revisions:

No.	Date	Description

THE LODGES AT STORRS

F. A. Hesketh & Associates, Inc.
6 Creamery Brook, East Granby, CT 06026
Civil & Traffic Engineers · Surveyors · Planners · Landscape Architects
Phone (860) 653-8000
Fax (860) 844-8600
e-mail mail@fahesketh.com

Q:\2004\04161\2016 - January\L00la102.dwg, LA-4, Mar. 17, 2016 - 4:20:21 PM

100.00 = PROPOSED SPOT GRADE
100 = PROPOSED ELEVATION CONTOUR
= PROPOSED CATCH BASIN
= PROPOSED MANHOLE
= PROPOSED HYDRODYNAMIC SEPARATORS
= PROPOSED STORM DRAIN CULVERT
F.D. = PROPOSED FOOTING DRAIN
100 = EXISTING ELEVATION CONTOUR
100.0 + = EXISTING SPOT GRADE

GRAPHIC SCALE
40 0 20 40 80 160
(IN FEET)
1 inch = 40 ft.

THE LODGES AT STORRS

F. A. Hesketh & Associates, Inc.
6 Creamery Brook, East Granby, CT 06026
Civil & Traffic Engineers · Surveyors · Planners · Landscape Architects
Phone (860) 653-8000
Fax (860) 844-8600
e-mail mail@fahesketh.com

Revisions:

No.	Date	Description
1	03-24-16	General

GRADING PLAN
PREPARED FOR
STORRS LODGES, LLC
HUNTING LODGE ROAD
MANSFIELD, CONNECTICUT

Date: 03-18-2016 | Drawn by: RJK | Job no: 04161
Scale: 1" = 40' | Checked by: DSZ | Sheet no: 1 OF 4

GR-1

C:\Users\dmelender\appdata\local\temp\AcPublish_6504\L00gr104.dwg, GR-1, Mar. 29, 2016 – 2:18:41 PM

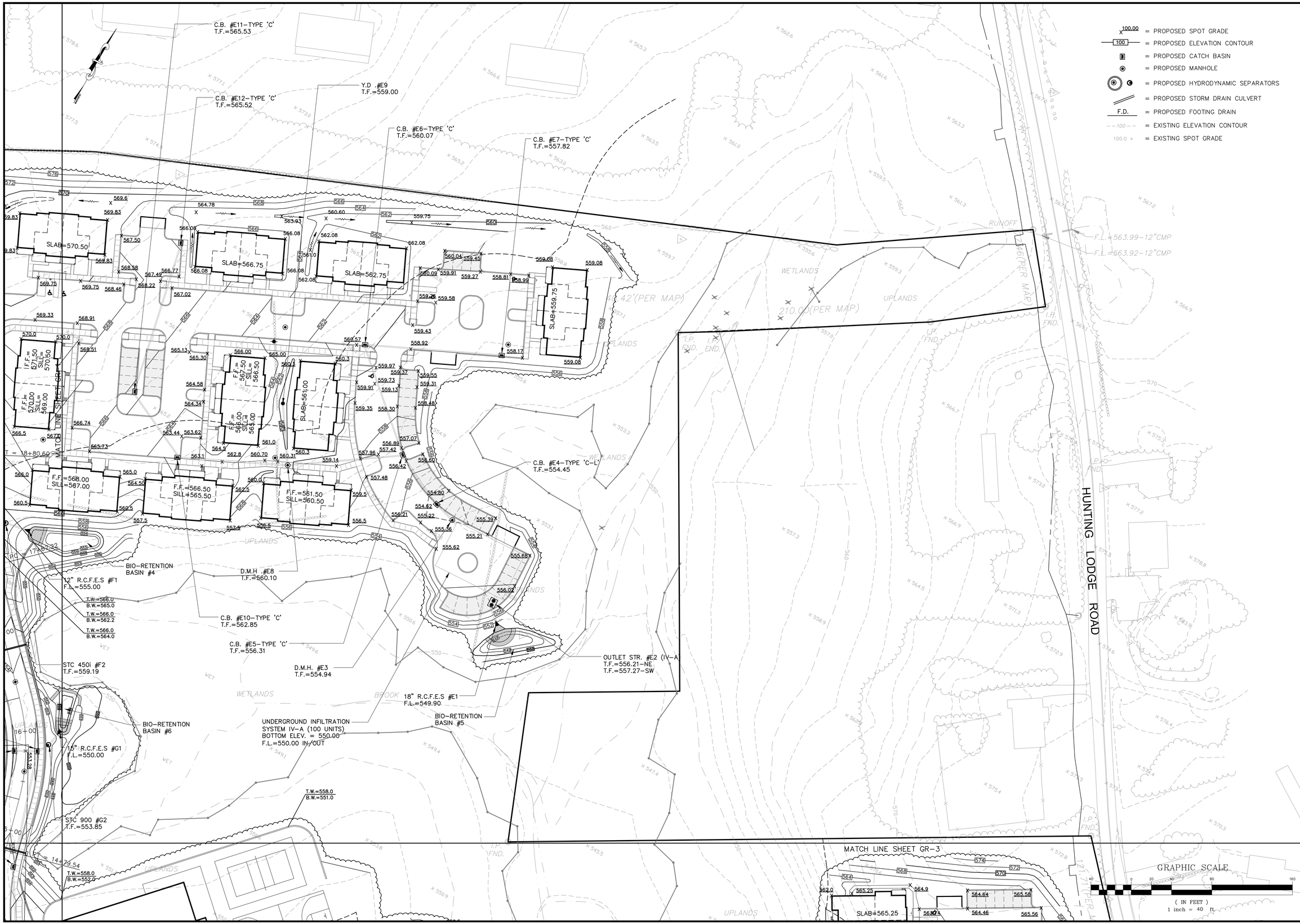

THE LODGES AT STORRS

F. A. Hesketh & Associates, Inc.
6 Creamery Brook, East Granby, CT 06026
Civil & Traffic Engineers · Surveyors · Planners · Landscape Architects
Phone (860) 653-8000
Fax (860) 844-8600
e-mail mail@fahesketh.com

Revisions:

No.	Date	Description
1	03-24-16	General

GRADING PLAN
PREPARED FOR
STORRS LODGES, LLC
HUNTING LODGE ROAD
MANSFIELD, CONNECTICUT

Date: 03-18-2016 | Drawn by: RJK | Job no: 04161
Scale: 1" = 40' | Checked by: DSZ | Sheet no: 2 OF 4

GR-2

C:\Users\dmelander\appdata\local\temp\AcPublish_6504\LODgr104.dwg, GR-2, Mar. 29, 2016 - 11:38:39 AM

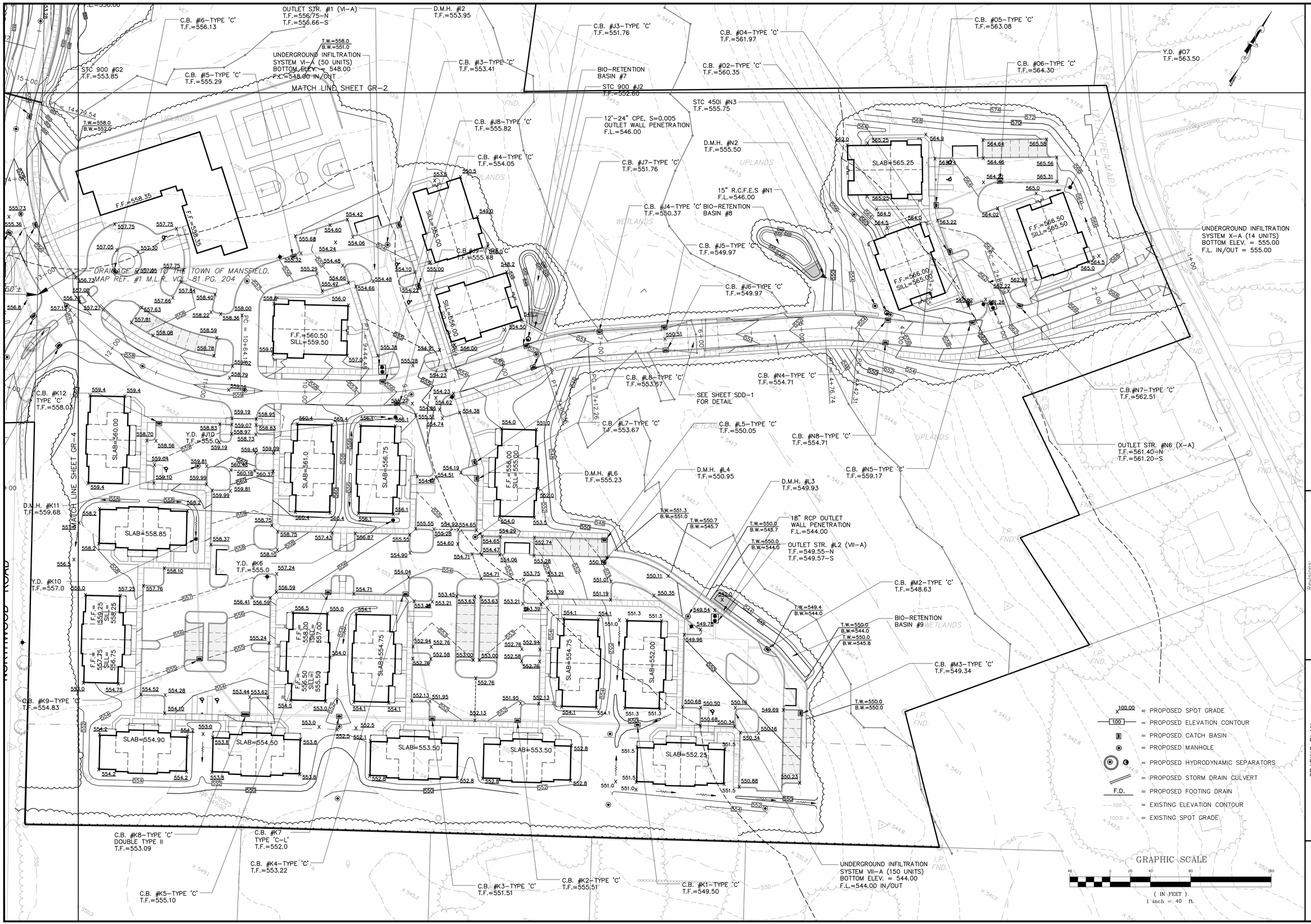

THE LODGES AT STORRS

F. A. Hesketh & Associates, Inc.
6 Creamery Brook, East Granby, CT 06026
Civil & Traffic Engineers · Surveyors · Planners · Landscape Architects
Phone (860) 653-8000
Fax (860) 844-8600
e-mail mail@hesketh.com

No.	Date	Description
1	03-24-16	General

Revisions:

GRADING PLAN

PREPARED FOR

STORRS LODGES, LLC

HUNTING LODGE ROAD

MANSFIELD, CONNECTICUT

Date: 03-18-2016	Drawn by: RJK	Job no: 04161	
Scale: 1" = 40'	Checked by: DSZ	Sheet no: 3 OF 4	

GR-3

C:\Users\dmelander\appdata\local\temp\AcPublish_6604\JOBgr104.dwg, GR-3, Mar. 29, 2016 - 2:21:28 PM

100.00	= PROPOSED SPOT GRADE
100	= PROPOSED ELEVATION CONTOUR
	= PROPOSED CATCH BASIN
	= PROPOSED MANHOLE
	= PROPOSED HYDRODYNAMIC SEPARATORS
	= PROPOSED STORM DRAIN CULVERT
F.D.	= PROPOSED FOOTING DRAIN
100	= EXISTING ELEVATION CONTOUR
100.0 +	= EXISTING SPOT GRADE

GRADING NOTES

1. SET/RAISE FRAMES OF ALL MANHOLES, CATCH BASINS, GAS AND WATER GATES, HAND HOLES, METER BOXES, AND ALL OTHER UTILITY APPURTENANCES TO MATCH PROPOSED FINISH GRADE.
2. SAW CUT EXISTING PAVEMENT ALONG LIMITS OF WORK. BLEND ALL NEW WORK TO MATCH EXISTING.
3. GRADE ALL AREAS TO PRECLUDE PONDING.
4. GRADE TRANSITIONS TO ROADWAYS TO MAINTAIN GUTTER FLOW AND PRECLUDE PONDING.

DRAINAGE SYSTEM NOTES:

1. RCP = REINFORCED CONCRETE PIPE CONFORMING TO CT DOT FORM 816, M.08.01–6, CLASS IV, UNLESS DESIGNATED ON DRAWINGS AS CLASS IV BY (C5).
2. F.E.S. = FLARED–END–SECTION OR REINFORCED CONCRETE CULVERT END CONFORMING TO CT DOT FORM 816, M.08.01–22.
3. PVC STORM DRAIN PIPE SHALL CONFORM TO CT DOT FORM 816, M.08.01–28.
4. CATCH BASINS, MANHOLES, AND OTHER DRAINAGE STRUCTURES SHALL CONFORM TO CT DOT 816, M.08.02 SPECIFICATIONS.
5. STC UNITS: PRECAST CONCRETE SEPARATOR STRUCTURES (CAPACITY AS SHOWN) AS MANUFACTURED BY RINKER MATERIALS CORPORATION (TEL. 800–909–7763)
6. FLOW LINE AND INVERT ELEVATIONS OF ALL STORM DRAIN ROOF LEADERS MUST BE COORDINATED WITH FINAL ARCHITECTURAL DRAWINGS. NOTIFY DESIGN ENGINEER OF CONFLICTS PRIOR TO START OF CONSTRUCTION.
7. UNDERGROUND UTILITIES DEPICTED ON THIS DRAWING ARE A COMPILATION OF FIELD SURVEY DATA, RECORD DESIGN PLANS, AND READILY AVAILABLE INFORMATION. NOT ALL UTILITIES MAY BE SHOWN, AND THOSE SHOWN MAY NOT BE ACCURATE. THE CONTRACTOR SHALL VERIFY ALL UTILITY LOCATIONS PRIOR TO START OF CONSTRUCTION OF UTILITIES. CONDUCT TEST PITS AT ALL UTILITY CROSSINGS AND POINT OF CONNECTIONS WITH EXISTING UTILITIES. NOTIFY DESIGN ENGINEER OF POTENTIAL CONFLICTS WITH PROPOSED ALIGNMENT AND GRADE.
8. CONTACT "CALL BEFORE YOU DIG" AT CALLING 1–800–922–4455 TO MARK THE LOCATION OF ALL UNDERGROUND UTILITIES AT LEAST 72 HOURS PRIOR TO START OF CONSTRUCTION.
9. ALL MATERIALS AND INSTALLATION PER EAST HARTFORD STANDARD SPECIFICATIONS, CT DOT FORM 816, OR CUSTODIAL UTILITY COMPANY SPECIFICATION, AS APPROPRIATE.
10. CONNECT ALL ROOF LEADERS AND FOOTING DRAINS INTO EXISTING OR NEW STORM DRAINAGE STRUCTURES AS SHOWN.
11. FOLLOW CT DOT PROCEDURES FOR DEMOLITION OF EXISTING PIPING INTO STRUCTURES AND FOR CONNECTION OF NEW PIPING INTO EXISTING STORM DRAIN STRUCTURES.
12. DEMOLISH EXISTING ON–SITE DRAINAGE SYSTEM BY REMOVING OLD PIPE AND STRUCTURES AND BACKFILLING AND COMPACTING TRENCHES IN CONTROLLED LAYERS WITH GRANULAR FILL. PRIOR TO DEMOLITION, VERIFY CONNECTIONS OF OFF–SITE PIPING AND NOTIFY DESIGN ENGINEER. FOLLOW ALL LOCAL, STATE, AND FEDERAL REQUIREMENTS FOR DEMOLITION ACTIVITIES.

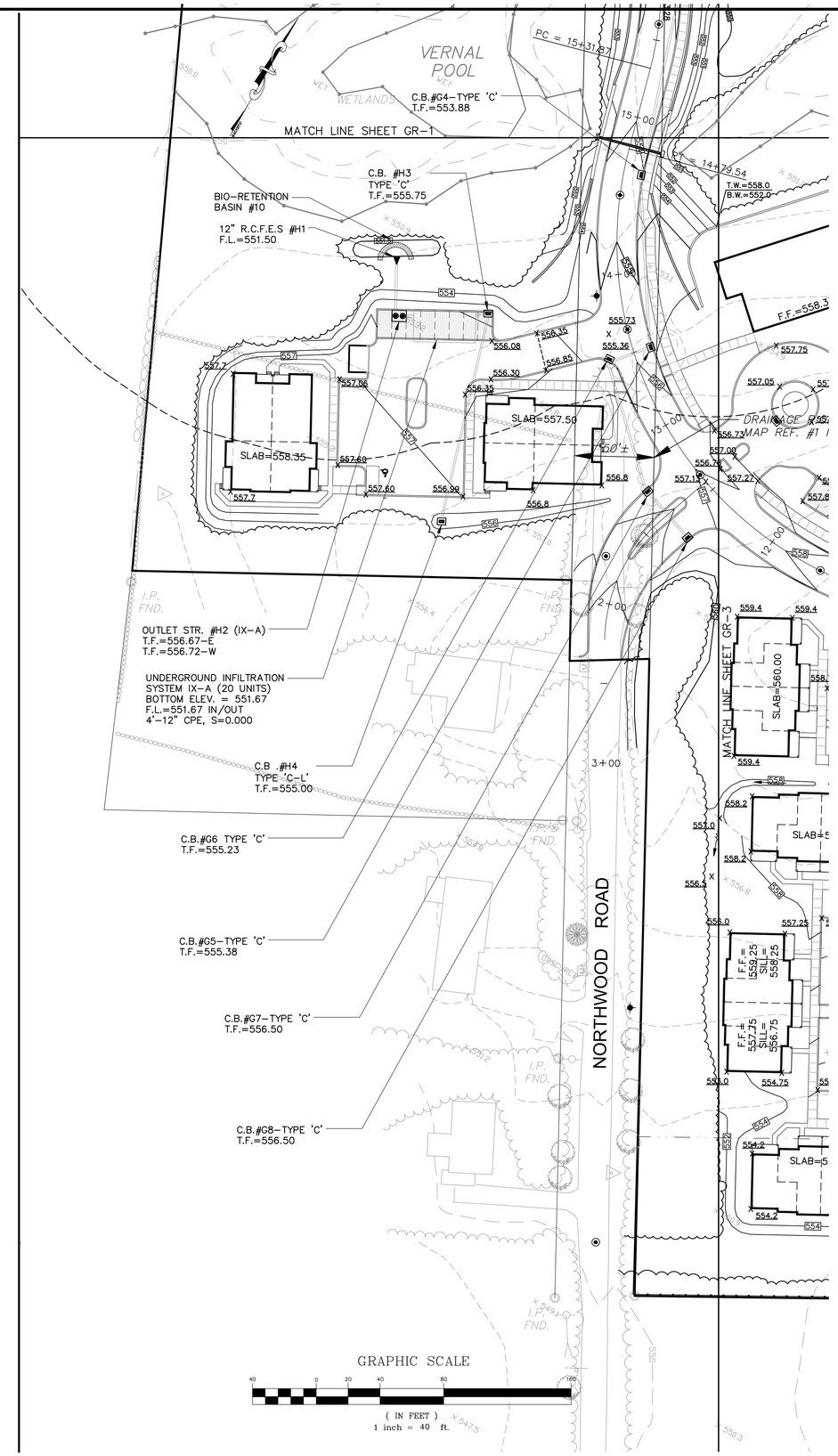

THE LODGES AT STORRS

F. A. Hesketh & Associates, Inc.
6 Creamery Brook, East Granby, CT 06026
Civil & Traffic Engineers · Surveyors · Planners · Landscape Architects
Phone (860) 653-8000
Fax (860) 844-8600
e-mail mail@fahesketh.com

Revisions:

No.	Date	Description
1	03–24–16	General

GRADING PLAN
PREPARED FOR
STORRS LODGES, LLC
HUNTING LODGE ROAD
MANSFIELD, CONNECTICUT

Date: *03–18–2016* | Drawn by: *RJK* | Job no: *04161*
Scale: *1" = 40'* | Checked by: *DSZ* | Sheet no: *4 OF 4*

GR–4

C:\Users\dmelonidis\appdata\local\temp\AcPublish_6504\LODgr104.dwg, GR–4, Mar. 29, 2016 – 4:14:18 PM

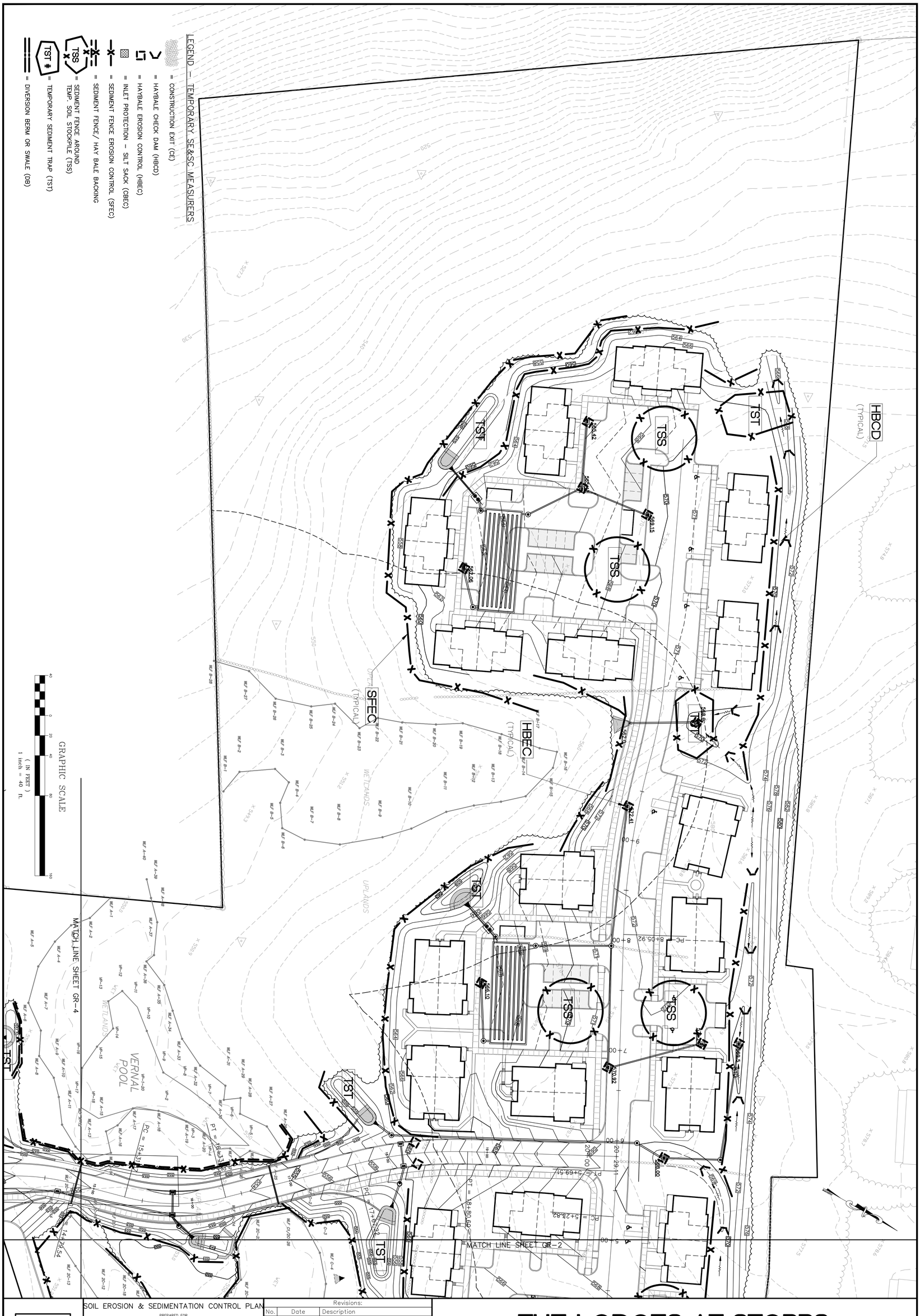

ER-1

SOIL EROSION & SEDIMENTATION CONTROL PLAN

PREPARED FOR

STORRS LODGES, LLC

HUNTING LODGE ROAD

MANSFIELD, CONNECTICUT

Date: *03-18-2016*	Drawn by: *RJK*	Job no: *04161*
Scale: *1" = 40'*	Checked by: *DSZ*	Sheet no: *1 OF 4*

Revisions:

No.	Date	Description

THE LODGES AT STORRS

FAH F. A. Hesketh & Associates, Inc.
6 Creamery Brook, East Granby, CT 06026
Civil & Traffic Engineers · Surveyors · Planners · Landscape Architects
Phone (860) 653-8000
Fax (860) 844-8600
e-mail mail@fahesketh.com

C:\Users\dmelander\appdata\local\temp\AcPublish_10200\LODer102.dwg, ER-1, Mar. 17, 2016 – 7:32:17 PM

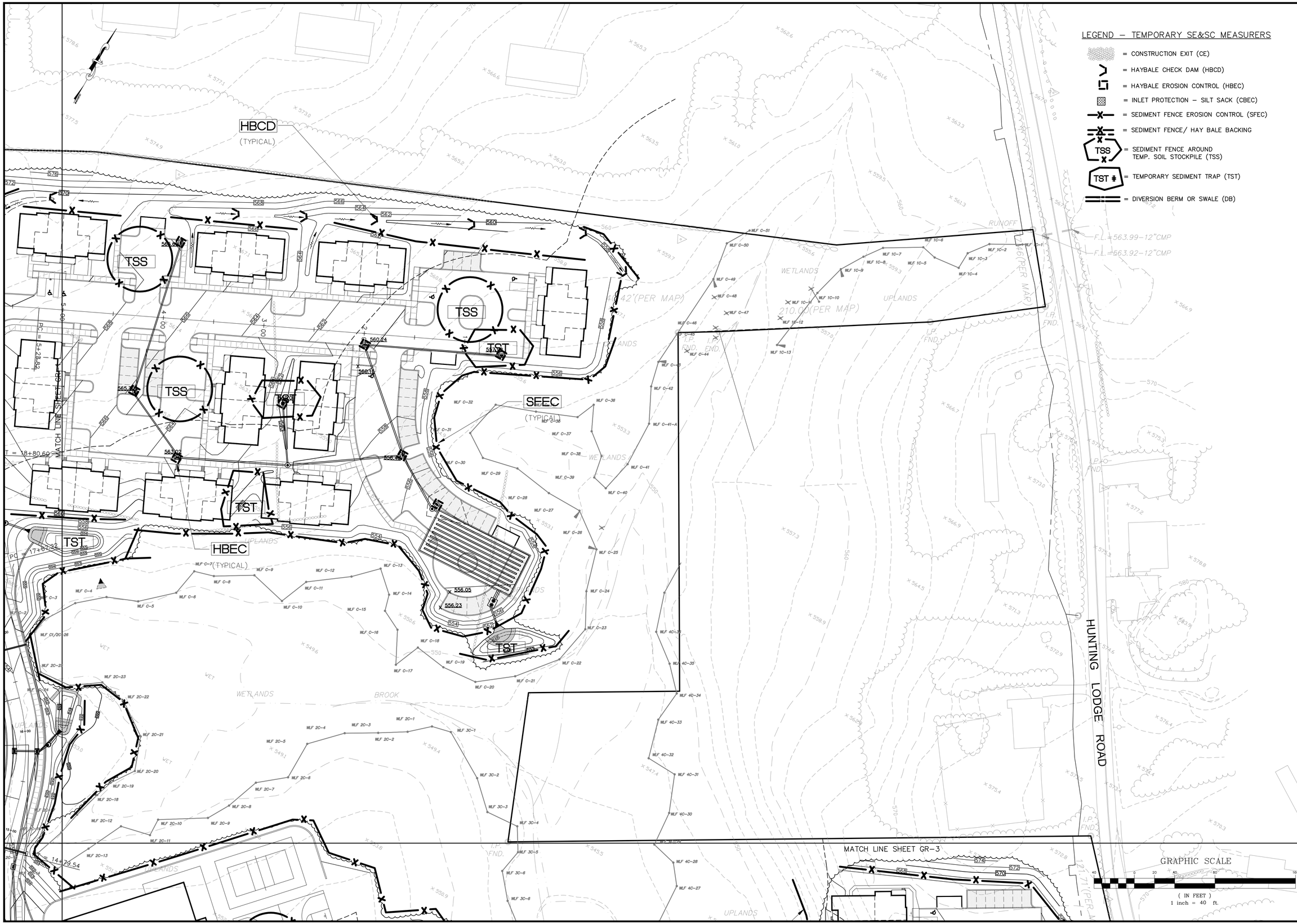

LEGEND – TEMPORARY SE&SC MEASURERS

- = CONSTRUCTION EXIT (CE)
- = HAYBALE CHECK DAM (HBCD)
- = HAYBALE EROSION CONTROL (HBEC)
- = INLET PROTECTION – SILT SACK (CBEC)
- = SEDIMENT FENCE EROSION CONTROL (SFEC)
- = SEDIMENT FENCE/ HAY BALE BACKING
- TSS = SEDIMENT FENCE AROUND TEMP. SOIL STOCKPILE (TSS)
- TST # = TEMPORARY SEDIMENT TRAP (TST)
- = DIVERSION BERM OR SWALE (DB)

THE LODGES AT STORRS

F. A. Hesketh & Associates, Inc.
6 Creamery Brook, East Granby, CT 06026
Civil & Traffic Engineers · Surveyors · Planners · Landscape Architects
Phone (860) 653-8000
Fax (860) 844-8600
e-mail mail@fahesketh.com

Revisions:

No.	Date	Description

SOIL EROSION & SEDIMENTATION CONTROL PLAN

PREPARED FOR

STORRS LODGES, LLC

HUNTING LODGE ROAD

MANSFIELD, CONNECTICUT

Date: 03-18-2016	Drawn by: RJK	Job no: 04161
Scale: 1" = 40'	Checked by: DSZ	Sheet no: 2 OF 4

ER-2

C:\Users\vmelander\appdata\local\temp\AcPublish_10200\Ober102.dwg, ER-2, Mar. 17, 2016 – 7:34:07 PM

THE LODGES AT STORRS

F. A. Hesketh & Associates, Inc.
6 Creamery Brook, East Granby, CT 06026
Civil & Traffic Engineers · Surveyors · Planners · Landscape Architects
Phone (860) 653-8000
Fax (860) 844-8600
e-mail mail@fahesketh.com

MATCH LINE SHEET GR-2

MATCH LINE SHEET GR-4

NORTHWOOD ROAD

DRAINAGE R.O.W. TO THE TOWN OF MANSFIELD.
MAP REF. #1 M.L.R. VOL. 81 PG. 204

TSS

TST

HBEC
(TYPICAL)

SFEC
(TYPICAL)

HBCD
(TYPICAL)

CE

WETLANDS

UPLANDS

BROOK

LEGEND – TEMPORARY SE&SC MEASURERS

- = CONSTRUCTION EXIT (CE)
- = HAYBALE CHECK DAM (HBCD)
- = HAYBALE EROSION CONTROL (HBEC)
- = INLET PROTECTION – SILT SACK (CBEC)
- = SEDIMENT FENCE EROSION CONTROL (SFEC)
- = SEDIMENT FENCE/ HAY BALE BACKING
- TSS = SEDIMENT FENCE AROUND TEMP. SOIL STOCKPILE (TSS)
- TST # = TEMPORARY SEDIMENT TRAP (TST)
- = DIVERSION BERM OR SWALE (DB)

GRAPHIC SCALE

40 0 20 40 80 160

(IN FEET)
1 inch = 40 ft.

No.	Date	Description

Revisions:

SOIL EROSION & SEDIMENTATION CONTROL PLAN

PREPARED FOR

STORRS LODGES, LLC

HUNTING LODGE ROAD
MANSFIELD, CONNECTICUT

Date: 03-18-2016	Drawn by: RJK	Job no: 04161	
Scale: 1" = 40'	Checked by: DSZ	Sheet no: 3 OF 4	

ER-3

C:\Users\dmelander\appdata\local\temp\AcPublish_10200\Lodber102.dwg, ER-3, Mar 17, 2016 - 7:06:19 PM

= PROPOSED SPOT GRADE

= PROPOSED ELEVATION CONTOUR

= PROPOSED CATCH BASIN

= PROPOSED MANHOLE

= PROPOSED HYDRODYNAMIC SEPARATORS

= PROPOSED STORM DRAIN CULVERT

F.D. = PROPOSED FOOTING DRAIN

= EXISTING ELEVATION CONTOUR

100.0 + = EXISTING SPOT GRADE

LEGEND – TEMPORARY SE&SC MEASURERS

= CONSTRUCTION EXIT (CE)

= HAYBALE CHECK DAM (HBCD)

= HAYBALE EROSION CONTROL (HBEC)

= INLET PROTECTION – SILT SACK (CBEC)

= SEDIMENT FENCE EROSION CONTROL (SFEC)

= SEDIMENT FENCE/ HAY BALE BACKING

TSS = SEDIMENT FENCE AROUND TEMP. SOIL STOCKPILE (TSS)

TST # = TEMPORARY SEDIMENT TRAP (TST)

= DIVERSION BERM OR SWALE (DB)

GRADING NOTES

1. SET/RAISE FRAMES OF ALL MANHOLES, CATCH BASINS, GAS AND WATER GATES, HAND HOLES, METER BOXES, AND ALL OTHER UTILITY APPURTENANCES TO MATCH PROPOSED FINISH GRADE.
2. SAW CUT EXISTING PAVEMENT ALONG LIMITS OF WORK. BLEND ALL NEW WORK TO MATCH EXISTING.
3. GRADE ALL AREAS TO PRECLUDE PONDING.
4. GRADE TRANSITIONS TO ROADWAYS TO MAINTAIN GUTTER FLOW AND PRECLUDE PONDING.

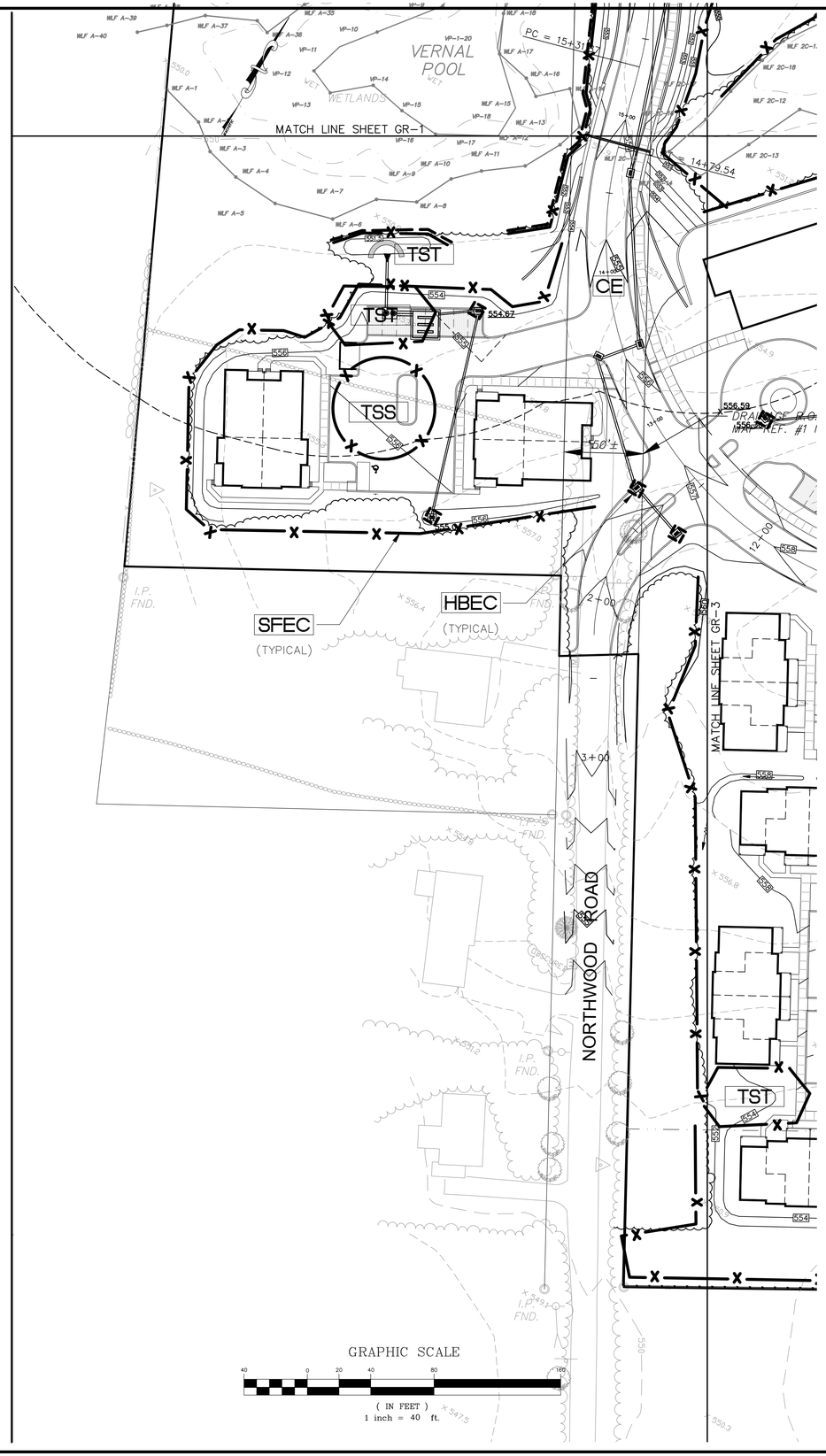

THE LODGES AT STORRS

F. A. Hesketh & Associates, Inc.
6 Creamery Brook, East Granby, CT 06026
Civil & Traffic Engineers · Surveyors · Planners · Landscape Architects
Phone (860) 653-8000
Fax (860) 844-8600
e-mail mail@fahesketh.com

Revisions:

No.	Date	Description

SOIL EROSION & SEDIMENTATION CONTROL PLAN

PREPARED FOR

STORRS LODGES, CT

HUNTING LODGE ROAD

MANSFIELD, CONNECTICUT

Date: *03-18-2016*	Drawn by: *RJK*	Job no: *04161*	
Scale: *1" = 40'*	Checked by: *DSZ*	Sheet no: *4 OF 4*	

ER-4

C:\Users\dmelander\appdata\local\temp\AcPublish_10200\LODer102.dwg, ER-4, Mar. 17, 2016 – 7:30:37 PM

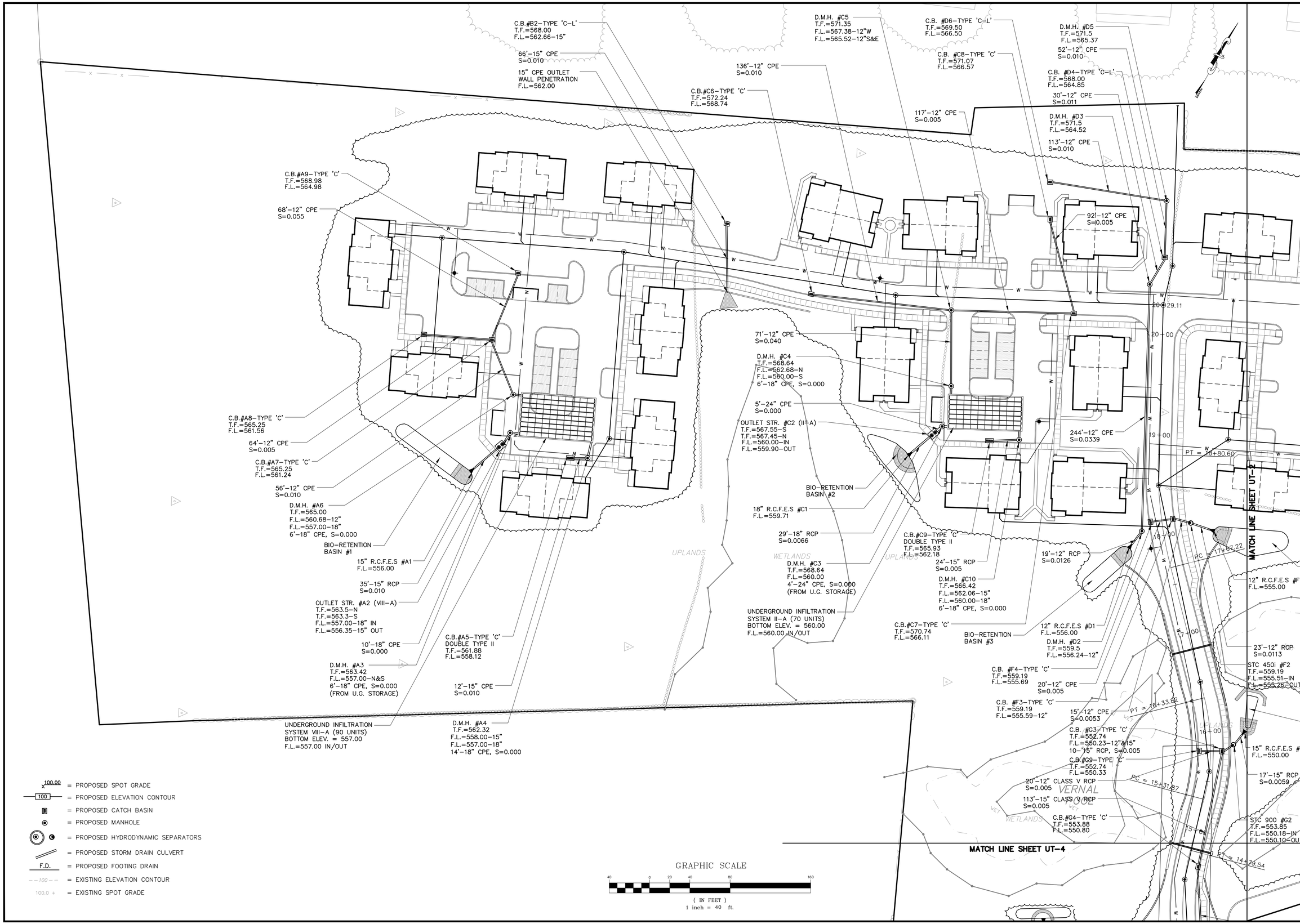

THE LODGES AT STORRS

F. A. Hesketh & Associates, Inc.
6 Creamery Brook, East Granby, CT 06026
Civil & Traffic Engineers · Surveyors · Planners · Landscape Architects
Phone (860) 653-8000
Fax (860) 844-8600
e-mail mail@fahesketh.com

No.	Date	Description
1	03-24-16	General

Revisions:

DRAINAGE AND UTILITY PLAN
PREPARED FOR
STORRS LODGES, LLC
HUNTING LODGE ROAD
MANSFIELD, CONNECTICUT

Date: 03-18-2016	Drawn by: RJK	Job no: 04161	Sheet no: 1 OF 4
Scale: 1" = 40'	Checked by: DSZ		

UT–1

C:\Users\dmelander\appdata\local\temp\AcPublish_6504\UDbrg104.dwg, UT-1, Mar 29, 2016 - 2:09:23 PM

UT-2

DRAINAGE AND UTILITY PLAN

PREPARED FOR

STORRS LODGES, LLC

HUNTING LODGE ROAD

MANSFIELD, CONNECTICUT

Date: 03-18-2016	Drawn by: RJK	Job no: 04161
Scale: 1" = 40'	Checked by: DSZ	Sheet no: 2 OF 4

Revisions:

No.	Date	Description
1	03-24-16	General

THE LODGES AT STORRS

FAH F. A. Hesketh & Associates, Inc.
6 Creamery Brook, East Granby, CT 06026
Civil & Traffic Engineers · Surveyors · Planners · Landscape Architects
Phone (860) 653-8000
Fax (860) 844-8600
e-mail mail@fahesketh.com

C:\Users\dmelander\appdata\local\temp\AcPublish_6504\LODgr104.dwg, UT-2, Mar. 29, 2016 - 11:26:39 AM

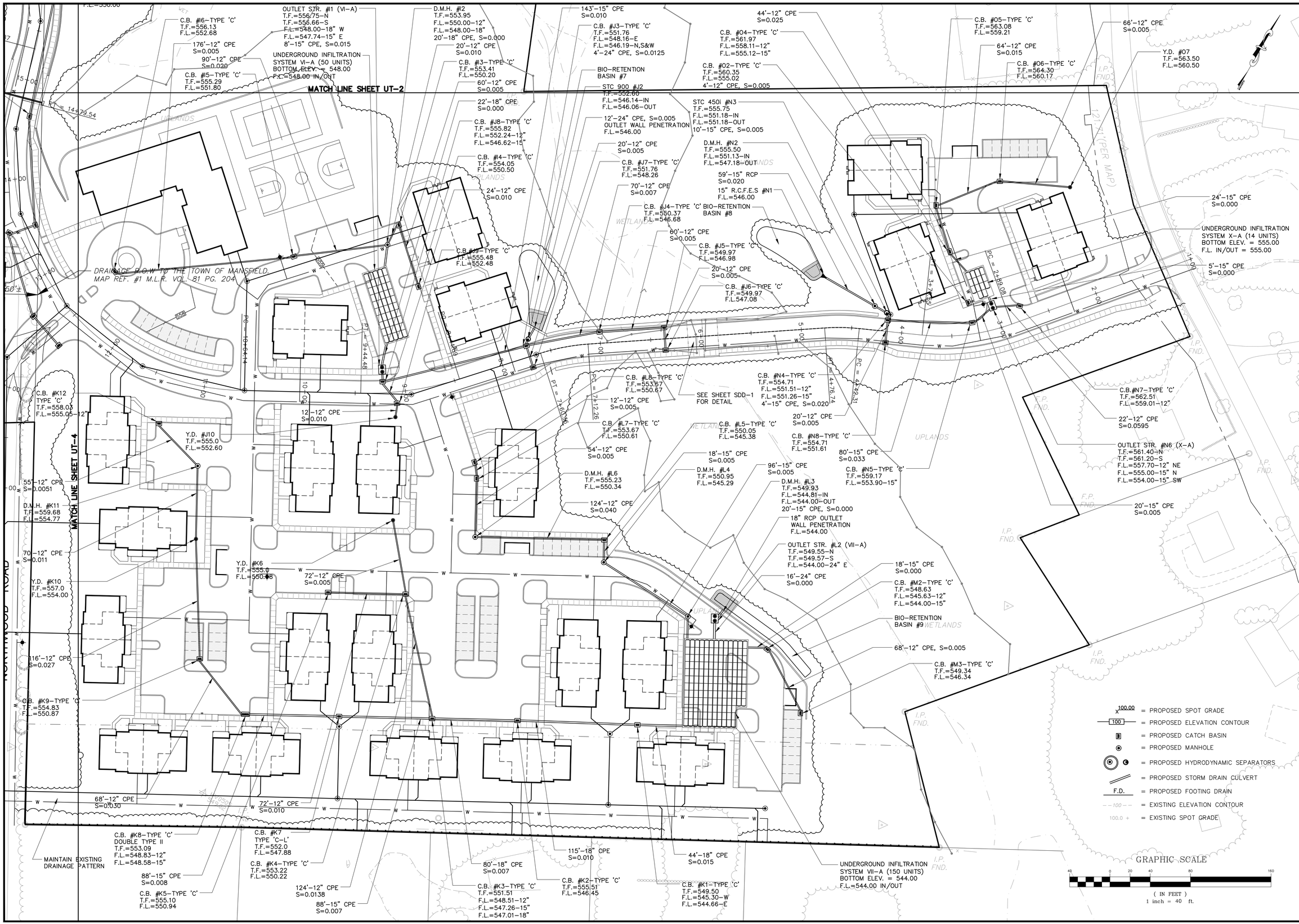

= PROPOSED SPOT GRADE
= PROPOSED ELEVATION CONTOUR
= PROPOSED CATCH BASIN
= PROPOSED MANHOLE
= PROPOSED HYDRODYNAMIC SEPARATORS
= PROPOSED STORM DRAIN CULVERT
= PROPOSED FOOTING DRAIN
= EXISTING ELEVATION CONTOUR
= EXISTING SPOT GRADE

THE LODGES AT STORRS

F. A. Hesketh & Associates, Inc.
6 Creamery Brook, East Granby, CT 06026
Civil & Traffic Engineers · Surveyors · Planners · Landscape Architects
Phone (860) 653-8000
Fax (860) 844-8600
e-mail mail@fahesketh.com

No.	Date	Description
1	03-24-16	General

Revisions:

DRAINAGE AND UTILITY PLAN

PREPARED FOR

STORRS LODGES, LLC

HUNTING LODGE ROAD
MANSFIELD, CONNECTICUT

Date: 03-18-2016	Drawn by: RJK	Job no: 04161	
Scale: 1" = 40'	Checked by: DSZ	Sheet no: 3 OF 4	

UT-3

C:\Users\dmelander\appdata\local\temp\AcPublish_6504\UT0gr104.dwg, UT-3, Mar. 29, 2016 - 2:13:27 PM

x 100.00	= PROPOSED SPOT GRADE
100	= PROPOSED ELEVATION CONTOUR
	= PROPOSED CATCH BASIN
	= PROPOSED MANHOLE
	= PROPOSED HYDRODYNAMIC SEPARATORS
	= PROPOSED STORM DRAIN CULVERT
F.D.	= PROPOSED FOOTING DRAIN
– – 100 – –	= EXISTING ELEVATION CONTOUR
100.0 +	= EXISTING SPOT GRADE

GRADING NOTES

1. SET/RAISE FRAMES OF ALL MANHOLES, CATCH BASINS, GAS AND WATER GATES, HAND HOLES, METER BOXES, AND ALL OTHER UTILITY APPURTENANCES TO MATCH PROPOSED FINISH GRADE.
2. SAW CUT EXISTING PAVEMENT ALONG LIMITS OF WORK. BLEND ALL NEW WORK TO MATCH EXISTING.
3. GRADE ALL AREAS TO PRECLUDE PONDING.
4. GRADE TRANSITIONS TO ROADWAYS TO MAINTAIN GUTTER FLOW AND PRECLUDE PONDING.

DRAINAGE SYSTEM NOTES:

1. RCP = REINFORCED CONCRETE PIPE CONFORMING TO CT DOT FORM 816, M.08.01–6, CLASS IV, UNLESS DESIGNATED ON DRAWINGS AS CLASS IV BY (C5).
2. F.E.S. = FLARED–END–SECTION OR REINFORCED CONCRETE CULVERT END CONFORMING TO CT DOT FORM 816, M.08.01–22.
3. PVC STORM DRAIN PIPE SHALL CONFORM TO CT DOT FORM 816, M.08.01–28.
4. CATCH BASINS, MANHOLES, AND OTHER DRAINAGE STRUCTURES SHALL CONFORM TO CT DOT 816, M.08.02 SPECIFICATIONS.
5. STC UNITS: PRECAST CONCRETE SEPARATOR STRUCTURES (CAPACITY AS SHOWN) AS MANUFACTURED BY RINKER MATERIALS CORPORATION (TEL. 800–909–7763)
6. FLOW LINE AND INVERT ELEVATIONS OF ALL STORM DRAIN ROOF LEADERS MUST BE COORDINATED WITH FINAL ARCHITECTURAL DRAWINGS. NOTIFY DESIGN ENGINEER OF CONFLICTS PRIOR TO START OF CONSTRUCTION.
7. UNDERGROUND UTILITIES DEPICTED ON THIS DRAWING ARE A COMPILATION OF FIELD SURVEY DATA, RECORD DESIGN PLANS, AND READILY AVAILABLE INFORMATION. NOT ALL UTILITIES MAY BE SHOWN, AND THOSE SHOWN MAY NOT BE ACCURATE. THE CONTRACTOR SHALL VERIFY ALL UTILITY LOCATIONS PRIOR TO START OF CONSTRUCTION OF UTILITIES. CONDUCT TEST PITS AT ALL UTILITY CROSSINGS AND POINT OF CONNECTIONS WITH EXISTING UTILITIES. NOTIFY DESIGN ENGINEER OF POTENTIAL CONFLICTS WITH PROPOSED ALIGNMENT AND GRADE.
8. CONTACT "CALL BEFORE YOU DIG" AT CALLING 1–800–922–4455 TO MARK THE LOCATION OF ALL UNDERGROUND UTILITIES AT LEAST 72 HOURS PRIOR TO START OF CONSTRUCTION.
9. ALL MATERIALS AND INSTALLATION PER EAST HARTFORD STANDARD SPECIFICATIONS, CT DOT FORM 816, OR CUSTODIAL UTILITY COMPANY SPECIFICATION, AS APPROPRIATE.
10. CONNECT ALL ROOF LEADERS AND FOOTING DRAINS INTO EXISTING OR NEW STORM DRAINAGE STRUCTURES AS SHOWN.
11. FOLLOW CT DOT PROCEDURES FOR DEMOLITION OF EXISTING PIPING INTO STRUCTURES AND FOR CONNECTION OF NEW PIPING INTO EXISTING STORM DRAIN STRUCTURES.
12. DEMOLISH EXISTING ON–SITE DRAINAGE SYSTEM BY REMOVING OLD PIPE AND STRUCTURES AND BACKFILLING AND COMPACTING TRENCHES IN CONTROLLED LAYERS WITH GRANULAR FILL. PRIOR TO DEMOLITION, VERIFY CONNECTIONS OF OFF–SITE PIPING AND NOTIFY DESIGN ENGINEER. FOLLOW ALL LOCAL, STATE, AND FEDERAL REQUIREMENTS FOR DEMOLITION ACTIVITIES.

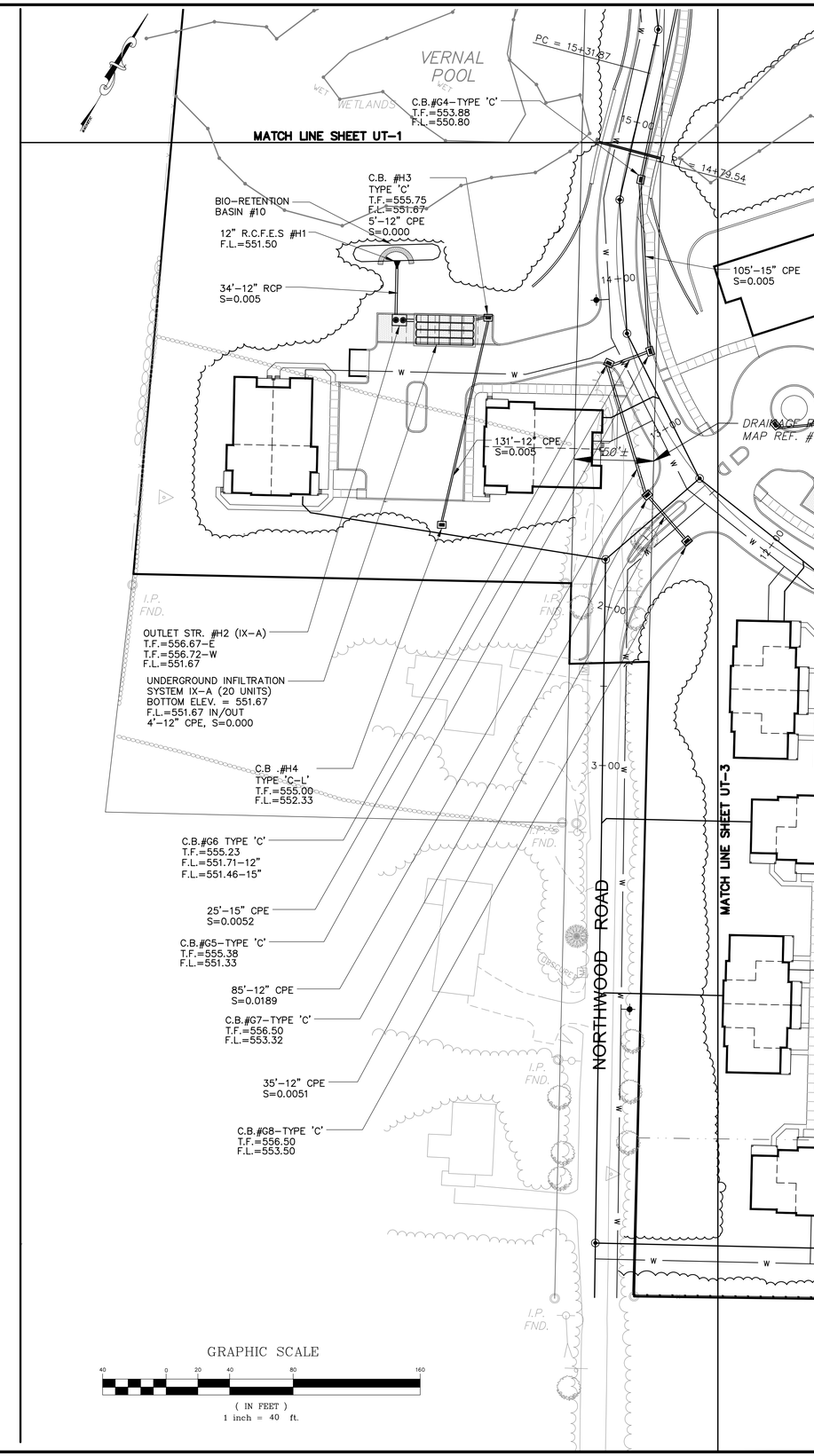

THE LODGES AT STORRS

F. A. Hesketh & Associates, Inc.
6 Creamery Brook, East Granby, CT 06026
Civil & Traffic Engineers · Surveyors · Planners · Landscape Architects
Phone (860) 653-8000
Fax (860) 844-8600
e-mail mail@fahesketh.com

Revisions:

No.	Date	Description
1	03–24–16	General

DRAINAGE AND UTILITY PLAN
PREPARED FOR
STORRS LODGES, LLC
HUNTING LODGE ROAD
MANSFIELD, CONNECTICUT

Date: 03–18–2016	Drawn by: RJK	Job no: 04161	Sheet no: 4 OF 4
Scale: 1" = 40'	Checked by: DSZ		

UT–4

C:\Users\dmellender\appdata\local\temp\AcPublish_8504\UtDgr104.dwg, UT–4, Mar. 29, 2016 – 4:16:28 PM

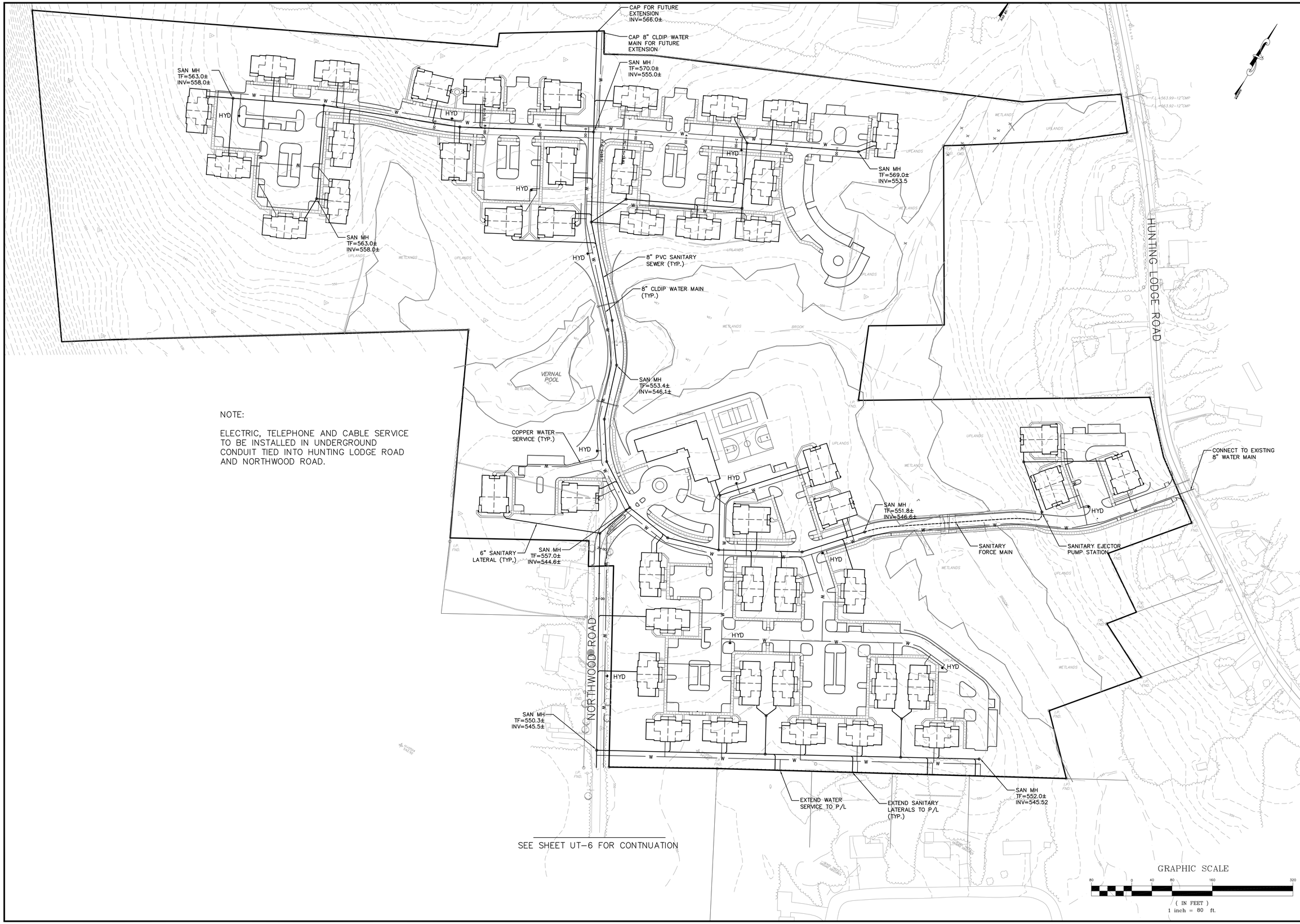

NOTE:

ELECTRIC, TELEPHONE AND CABLE SERVICE TO BE INSTALLED IN UNDERGROUND CONDUIT TIED INTO HUNTING LODGE ROAD AND NORTHWOOD ROAD.

SEE SHEET UT-6 FOR CONTNUATION

THE LODGES AT STORRS

F. A. Hesketh & Associates, Inc.
6 Creamery Brook, East Granby, CT 06026
Civil & Traffic Engineers · Surveyors · Planners · Landscape Architects
Phone (860) 653-8000
Fax (860) 844-8600
e-mail mail@fahesketh.com

Revisions:

No.	Date	Description
1	03-24-2016	General

OVERALL UTILITY PLAN
PREPARED FOR
STORRS LODGES, LLC
HUNTING LODGE ROAD
MANSFIELD, CONNECTICUT

Date: 03-18-16	Drawn by: CAD	Job no: 04161	
Scale: 1" = 80'	Checked by: DSZ	Sheet no: 1 OF 2	

UT-5

G:\2004\04161\2016 - January\LODut101.dwg, UT-5, Mar 29, 2016 - 9:38:52 AM

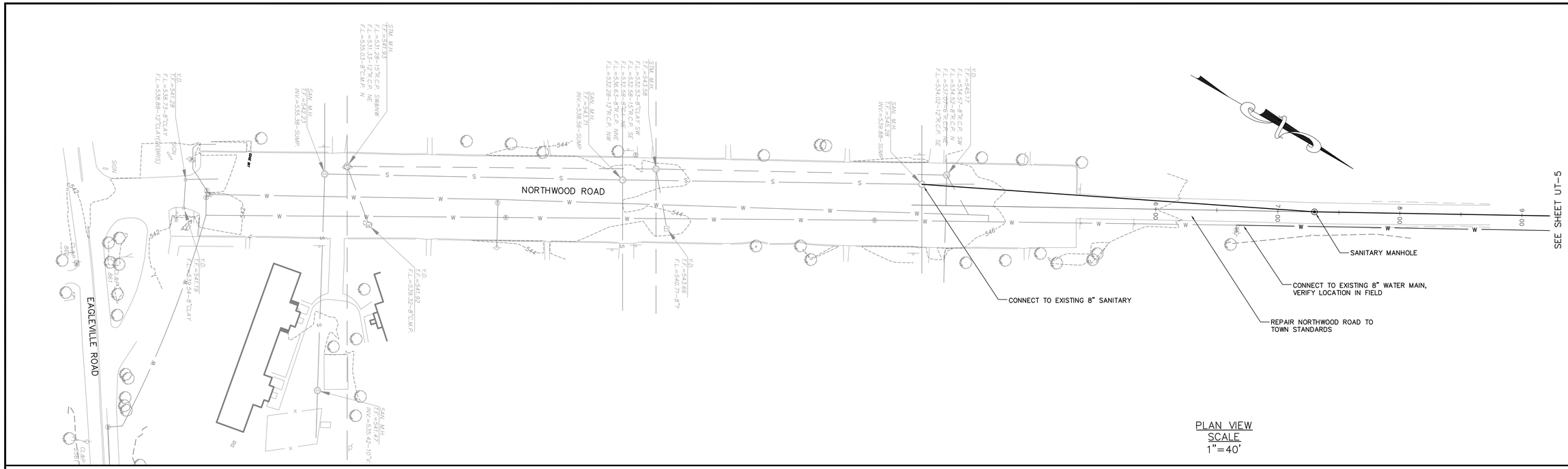

PLAN VIEW
SCALE
1"=40'

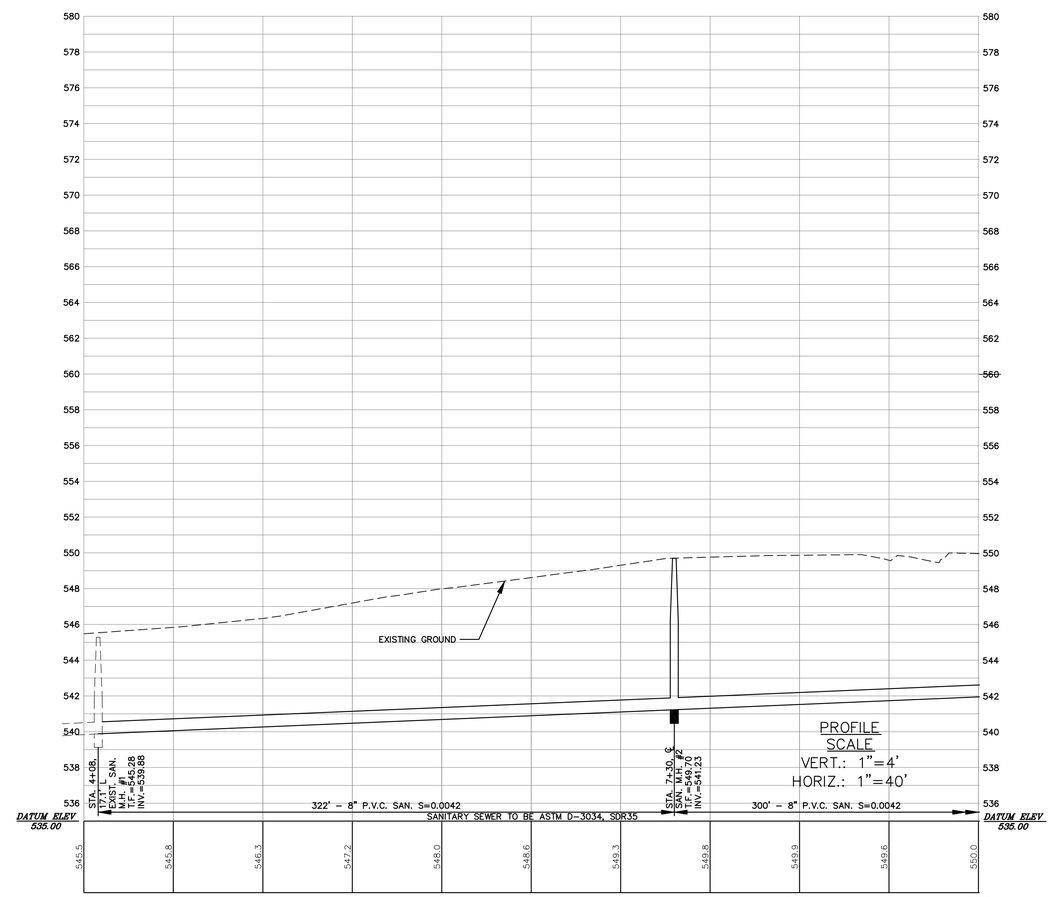

PROFILE
SCALE
VERT.: 1"=4'
HORIZ.: 1"=40'

THE LODGES AT STORRS

F. A. Hesketh & Associates, Inc.
6 Creamery Brook, East Granby, CT 06026
Civil & Traffic Engineers · Surveyors · Planners · Landscape Architects
Phone (860) 653-8000
Fax (860) 844-8600
e-mail mail@fahesketh.com

Revisions:

No.	Date	Description
1	03-24-2016	General

OVERALL UTILTIY PLAN – NORTHWOOD ROAD

PREPARED FOR

STORRS LODGES, CT

HUNTING LODGE ROAD
MANSFIELD, CONNECTICUT

Date: 03-18-16	Drawn by: CAD	Job no: 04161
Scale: A NOTED	Checked by: DSZ	Sheet no: 2 OF 2

UT-6

Q:\2004\04161\2016 – January\L00u1201.dwg, UT-6, Mar 29, 2016 – 9:43:39 AM

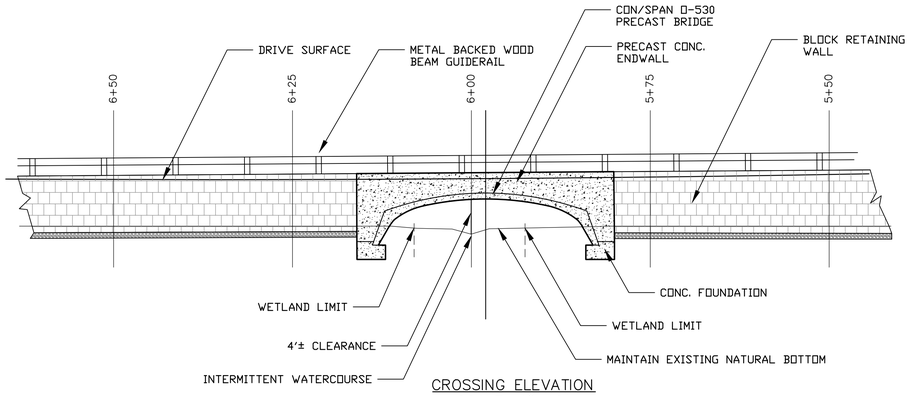

CROSSING ELEVATION
SCALE: 1"=10'

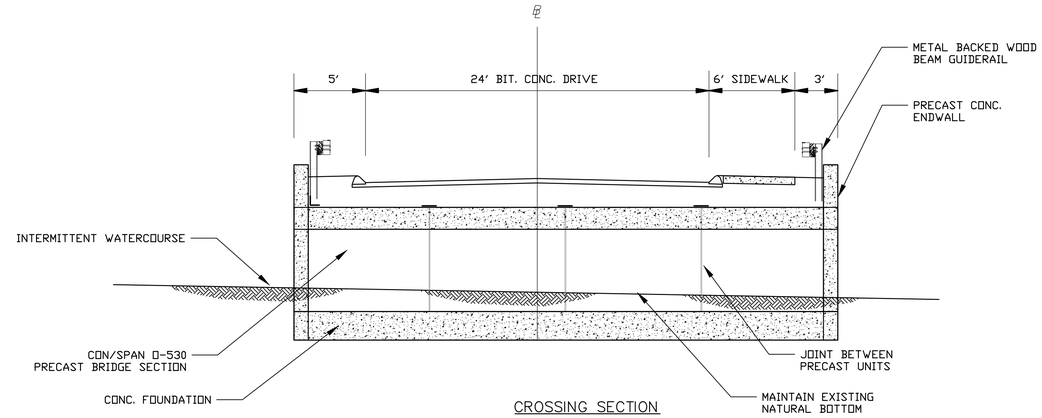

CROSSING SECTION
SCALE: 1"=5'

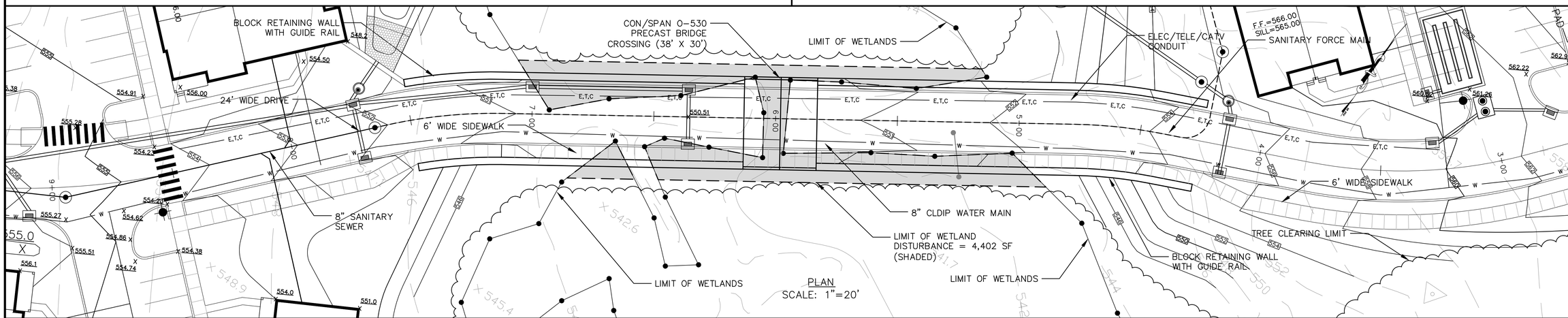

PLAN
SCALE: 1"=20'

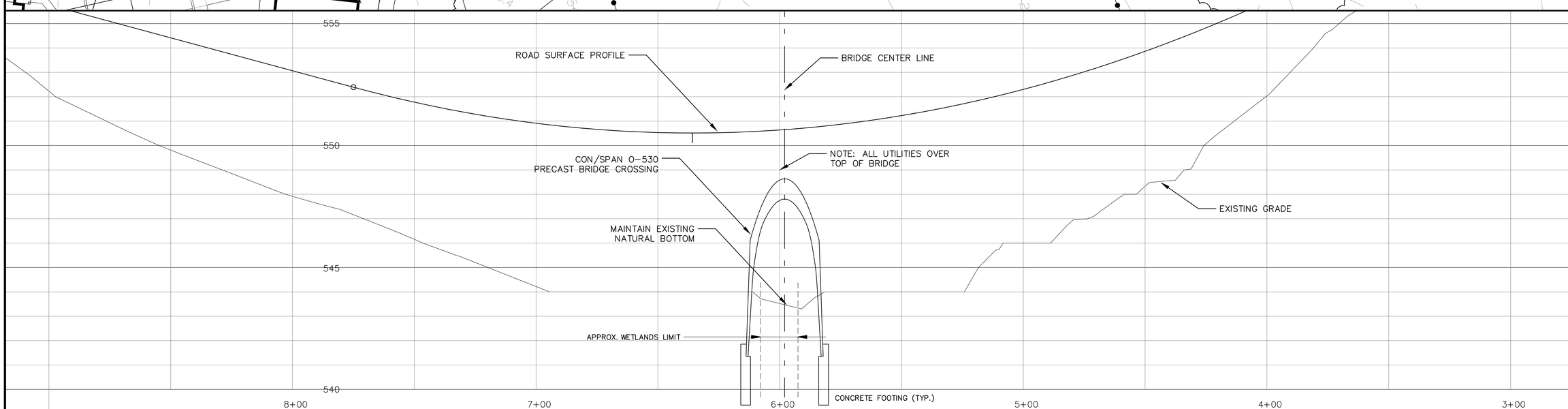

PROFILE
VERT.: 1"=2'
HORIZ.: 1"=20'

THE LODGES AT STORRS

F. A. Hesketh & Associates, Inc.
6 Creamery Brook, East Granby, CT 06026
Civil & Traffic Engineers · Surveyors · Planners · Landscape Architects
Phone (860) 653-8000
Fax (860) 844-8600
e-mail mail@fahesketh.com

No.	Date	Description

Revisions:

SITE DRIVEWAY DETAIL
PREPARED FOR
STORRS LODGES, LLC
HUNTING LODGE ROAD
MANSFIELD, CONNECTICUT

Date: *03-18-2016*	Drawn by: *RJK*	Job no: *04161*	
Scale: *AS SHOWN*	Checked by: *DSZ*	Sheet no: *1 OF 2*	

SDD-1

C:\Users\dmelander\appdata\local\temp\AcPublish_5776\LODpp202 2Dscale.dwg, SDD-1, Mar 17, 2016 - 3:43:15 PM

WETLAND RESTORATION NOTE:
PLANT SHRUBS AND TREES IN
A MOSAIC WITH WET MEADOW

LIMIT OF WETLANDS
STONE CHECK DAM
WETLAND RESTORATION (SEE NOTE)
VEGETATED SWALE
LEVEL SPREADER
TREE CLEARING LIMIT
GUIDANCE FENCE (TYP.)
LIMIT OF WETLANDS
STONE CHECK DAM
RIP RAP OUTLET PROTECTION/FOREBAY
6' WIDE BIT. CONC. SIDEWALK
BIORETENTION BASIN
BLOCK RETAINING WALL
BLOCK RETAINING WALL
RIP RAP OUTLET PROTECTION/FOREBAY
ELEC/TELE/CATV CONDUIT
6' WIDE BIT. CONC. SIDEWALK
DRIVE B
24' WIDE BIT. CONC. DRIVE WITH BIT. CONC. CURB
8" SANITARY SEWER
8" CLDIP WATER MAIN
BLOCK RETAINING WALL
WILDLIFE TUNNEL #1
WILDLIFE TUNNEL #2
GUIDANCE FENCE (TYP.)
BLOCK RETAINING WALL
LIMIT OF WETLANDS
TREE CLEARING LIMIT
LIMIT OF WETLANDS
100' MIN.
100'
VERNAL POOL
WET
WETLANDS
UPLANDS
GRAPHIC SCALE
(IN FEET)
1 inch = 20 ft.

THE LODGES AT STORRS

F. A. Hesketh & Associates, Inc.
6 Creamery Brook, East Granby, CT 06026
Civil & Traffic Engineers · Surveyors · Planners · Landscape Architects
Phone (860) 653-8000
Fax (860) 844-8600
e-mail mail@fahesketh.com

Revisions:

No.	Date	Description
1	03-24-2016	General

SITE DRIVEWAY DETAIL – STA. 14+00–18+00

PREPARED FOR
STORRS LODGES, LLC
HUNTING LODGE ROAD
MANSFIELD, CONNECTICUT

Date: 03-18-2016 | Drawn by: RJK | Job no: 04161
Scale: AS SHOWN | Checked by: DSZ | Sheet no: 2 OF 2

SDD-2

Q:\2004\04161\2016 – January\LODpp202 20scale.dwg, SDD-2, Mar 29, 2016 – 9:58:47 AM

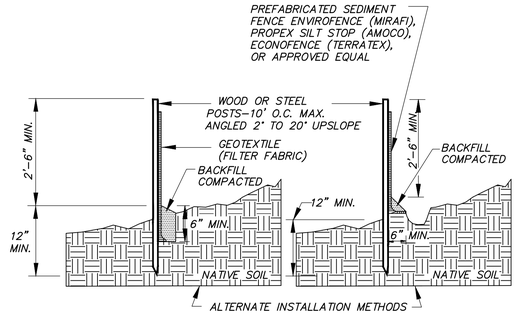

NOTE:
1. WOOD POSTS SHALL BE HARDWOOD 1 1/2" x 1 1/2" x 48" MIN. STEEL POST SHALL BE A MINIMUM OF 0.5 POUNDS PER LINEAR FOOT X 48".
2. JOINTS, WHEN REQUIRED, SHALL BE SPLICED & SECURELY SEALED TOGETHER, AT POST LOCATIONS ONLY, WITH A MINIMUM 6" OVERLAP.

SEDIMENT FENCE EROSION CONTROL (SFEC)

N.T.S.

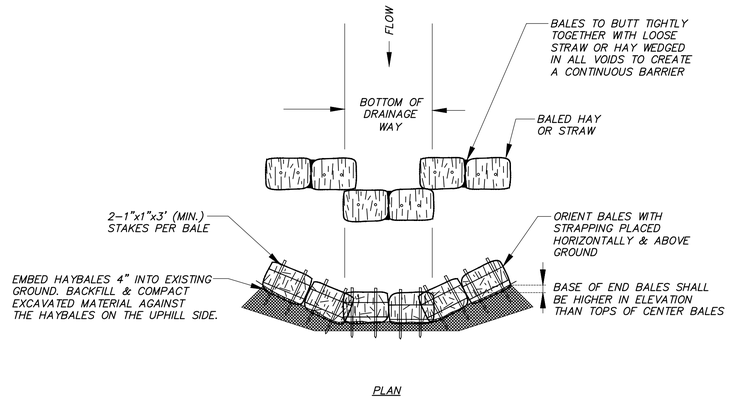

HAYBALE CHECK DAM (HBCD)

N.T.S.

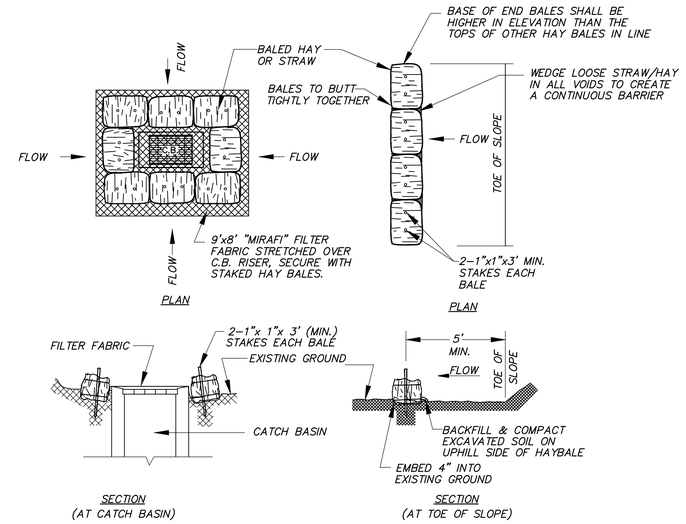

HAYBALE EROSION CONTROL (HBEC)

N.T.S.

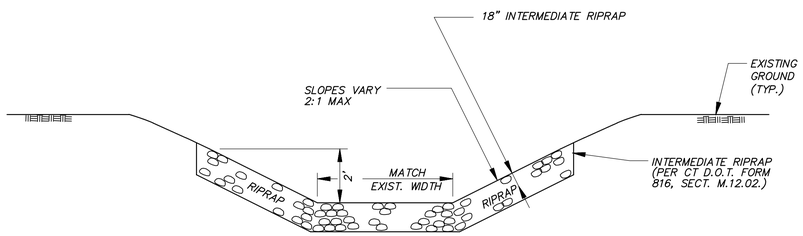

RIPRAP SWALE (RRSW)

N.T.S.

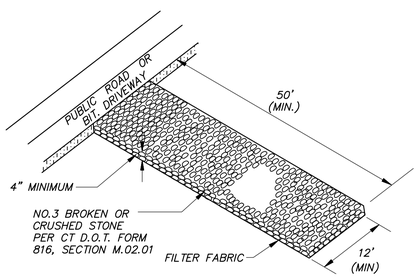

CONSTRUCTION EXIT (CE)

N.T.S.

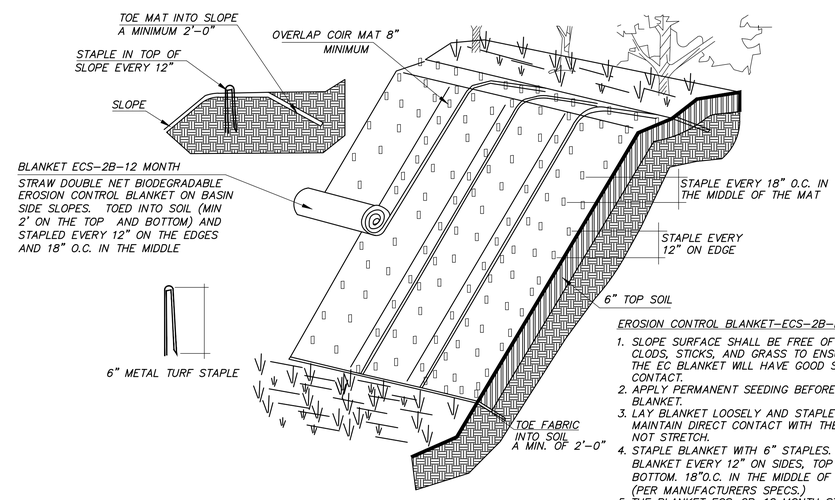

EROSION CONTROL BLANKET–ECS–2B–NOTES

1. SLOPE SURFACE SHALL BE FREE OF ROCKS, CLODS, STICKS, AND GRASS TO ENSURE THAT THE EC BLANKET WILL HAVE GOOD SOIL CONTACT.
2. APPLY PERMANENT SEEDING BEFORE PLACING BLANKET.
3. LAY BLANKET LOOSELY AND STAPLE TO MAINTAIN DIRECT CONTACT WITH THE SOIL. DO NOT STRETCH.
4. STAPLE BLANKET WITH 6" STAPLES. STAPLE BLANKET EVERY 12" ON SIDES, TOP AND BOTTOM. 18"O.C. IN THE MIDDLE OF THE MAT. (PER MANUFACTURERS SPECS.)
5. THE BLANKET ECS–2B–12 MONTH STRAW DOUBLE NET BIODEGRADABLE EROSION CONTROL BLANKETS TO BE INSTALLED IN SECTIONS RUNNING FROM THE TOP TO THE BOTTOM OF THE SLOPE, ALONG THE ENTIRE AREAS AS SHOWN ON THE PLAN (PER MANUFACTURERS SPECIFICATIONS.)

NOTES:

1. USE ANTI–WASH/GEOJUTE PRODUCT OR APPROVED EQUAL
2. FOR USE ON SLOPES 2:1 OR GREATER

EROSION CONTROL BLANKET

N.T.S.

THE LODGES AT STORRS

F. A. Hesketh & Associates, Inc.
6 Creamery Brook, East Granby, CT 06026
Civil & Traffic Engineers · Surveyors · Planners · Landscape Architects
Phone (860) 653-8000
Fax (860) 844-8600
e-mail mail@fahesketh.com

No.	Date	Description

Revisions:

DETAILS
PREPARED FOR
STORRS LODGES, LLC
HUNTING LODGE ROAD
MANSFIELD, CONNECTICUT

Date: 03–18–2016	Drawn by: CAD	Job no: 04161	Sheet no: 1 OF 6
Scale: AS NOTED	Checked by: DSZ		

SD–1

C:\Users\dmelonder\appdata\local\temp\AcPublish_5776\LODset102.dwg, SD–1, Mar. 17, 2016 – 5:43:53 PM

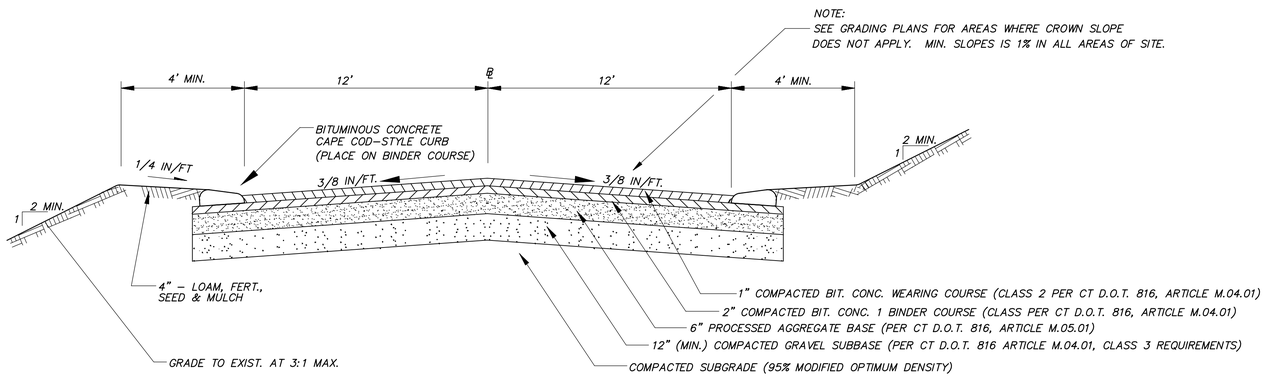

TYPICAL DRIVEWAY SECTION

N.T.S.

NOTE: INSTALL UNDERDRAIN WHERE INDICATED ON PLAN/PROFILE SHEETS.

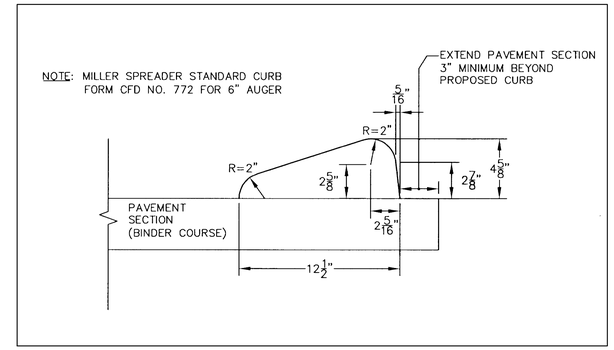

CAPE COD-STYLE CURB SECTION

N.T.S.

NOTE: SLOPE PAD TO PROPERLY DRAIN AND
TO PRECLUDE PONDING (SEE GRADING PLAN)

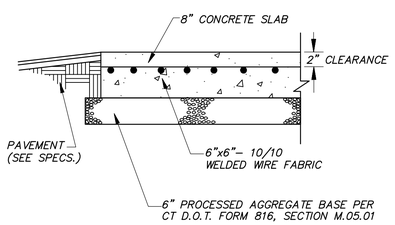

DUMPSTER PAD DETAIL

N.T.S.

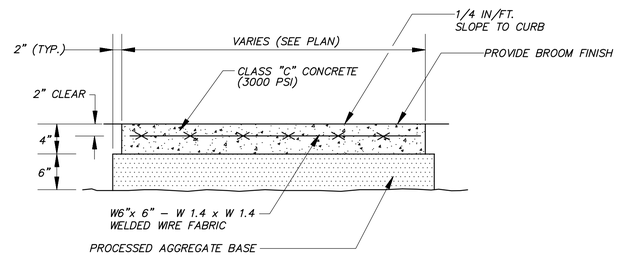

EXPANSION JOINTS AT 20 FT. O.C.
DUMMY JOINTS AT 5 FT. O.C.
UNLESS OTHERWISE SPECIFIED

CONCRETE SIDEWALK DETAIL

N.T.S.

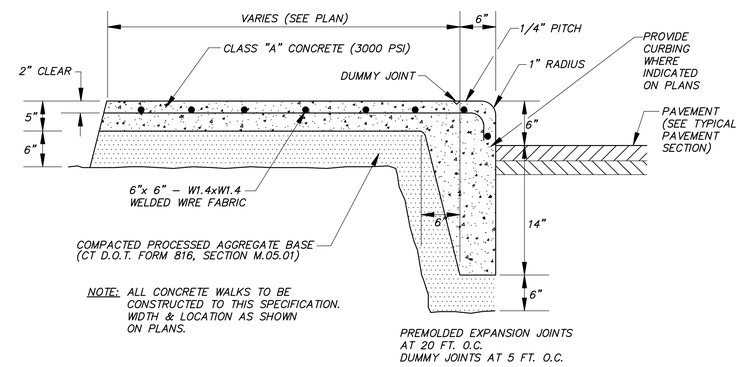

NOTE: ALL CONCRETE WALKS TO BE
CONSTRUCTED TO THIS SPECIFICATION.
WIDTH & LOCATION AS SHOWN
ON PLANS.

PREMOLDED EXPANSION JOINTS
AT 20 FT. O.C.
DUMMY JOINTS AT 5 FT. O.C.

CONCRETE SIDEWALK & CURB DETAIL

N.T.S.

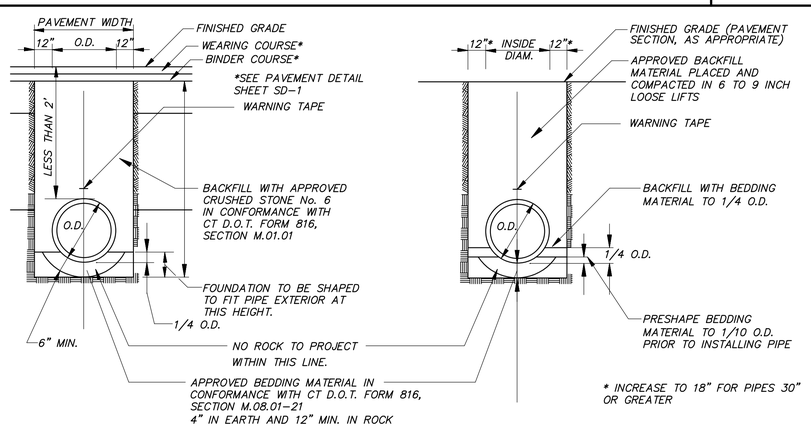

SHALLOW PIPE WITH LESS THAN 2' OF COVER

PIPE WITH MORE THAN 2' OF COVER

STORM SEWER TRENCH DETAIL

N.T.S.

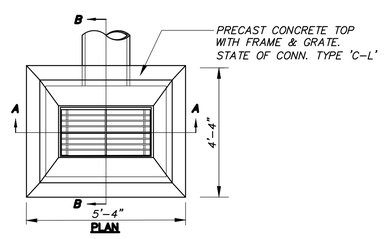

NOTE:
1. ALL MATERIALS SHALL CONFORM TO CT D.O.T. FORM 816, SECTION M.08.02.
2. PRECAST CONCRETE TOP TO MATCH PROPOSED BITUMINOUS CAPE COD CURB.
3. GRATES AND FRAME SHALL BE GALVANIZED STEEL. THERE SHALL BE NO CURB OPENING.
4. INSTALL SNOUT HOOD TRAP AT OUTLET FROM EACH CATCH BASIN.

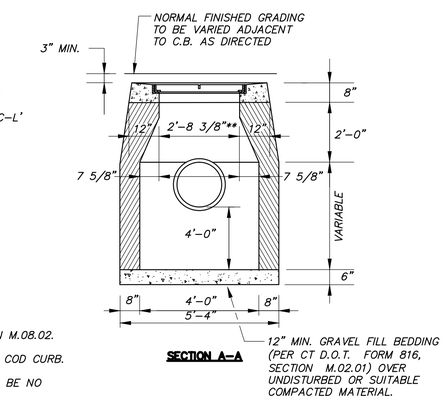

SECTION A–A

NOTE: ALL MATERIALS SHALL CONFORM
TO CT D.O.T. FORM 816, SECTION
M.08.02

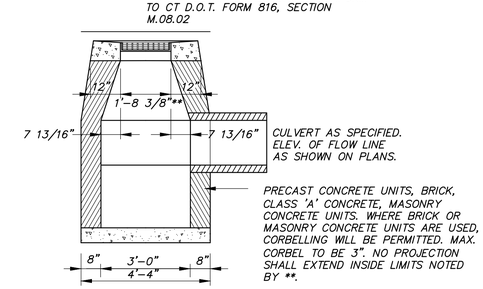

SECTION B–B

TYPE 'C–L' CATCH BASIN

N.T.S.

THE LODGES AT STORRS

F. A. Hesketh & Associates, Inc.
6 Creamery Brook, East Granby, CT 06026
Civil & Traffic Engineers · Surveyors · Planners · Landscape Architects
Phone (860) 653-8000
Fax (860) 844-8600
e-mail mail@fahesketh.com

No.	Date	Revisions: Description

DETAILS
PREPARED FOR
STORRS LODGES, LLC
HUNTING LODGE ROAD
MANSFIELD, CONNECTICUT

Date: 03-18-2016	Drawn by: CAD	Job no: 04161	
Scale: AS NOTED	Checked by: DSZ	Sheet no: 2 OF 6	

SD-2

C:\Users\dmelander\appdata\local\temp\AcPublish_5776\LODset02.dwg, SD-2, Mar. 17, 2016 – 5:28:48 PM

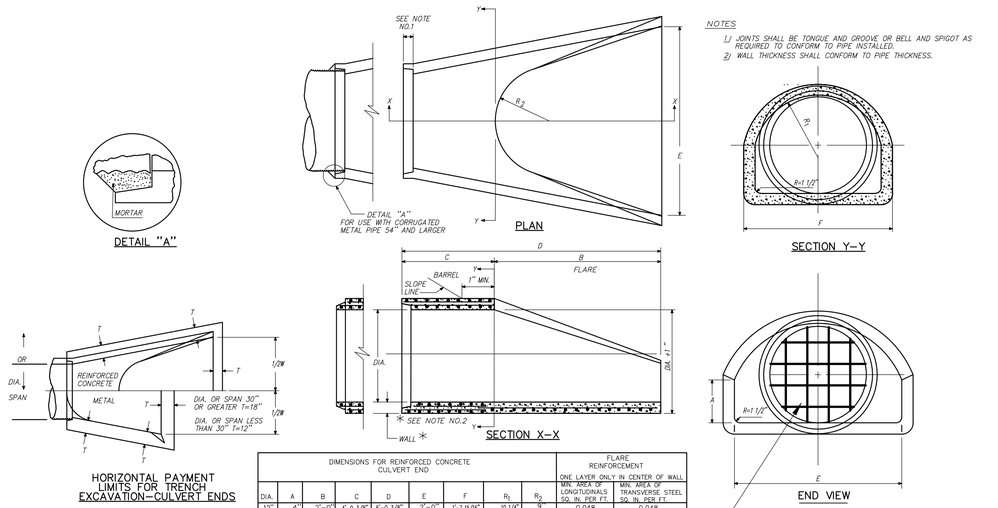

NOTES

1/ JOINTS SHALL BE TONGUE AND GROOVE OR BELL AND SPIGOT AS REQUIRED TO CONFORM TO PIPE INSTALLED.
2/ WALL THICKNESS SHALL CONFORM TO PIPE THICKNESS.

DIMENSIONS FOR REINFORCED CONCRETE CULVERT END									FLARE REINFORCEMENT ONE LAYER ONLY IN CENTER OF WALL	
DIA.	A	B	C	D	E	F	R_1	R_2	MIN. AREA OF LONGITUDINALS SQ. IN. PER FT.	MIN. AREA OF TRANSVERSE STEEL SQ. IN. PER FT.
12"	4"	2'–0"	4'–0 3/8"	6'–0 3/8"	2'–0"	1'–7 15/16"	19 1/4"	9"	0.048	0.048
15"	6"	2'–3"	3'–10"	6'–1"	2'–6"	2'–0 5/16"	1'–9 1/2"	11"	0.054	0.054
18"	9"	2'–3"	3'–10"	6'–1"	3'–0"	2'–5"	1'–11 1/2"	1'–0"	0.060	0.060
21"	9"	2'–1"	3'–2"	6'–1"	3'–6"	2'–7 1/2"	1'–4"	1'–1"	0.066	0.066
24"	9 1/2"	3'–7 1/2"	2'–6"	6'–1 1/2"	4'–0"	2'–9 3/16"	1'–4 13/16"	1'–2"	0.072	0.072
30"	1'–0"	4'–6"	1'–7 3/4"	6'–1 3/4"	5'–0"	3'–1"	1'–8 1/2"	1'–3"	0.084	0.084
36"	1'–3"	5'–3"	2'–10 3/4"	8'–1 3/4"	6'–0"	3'–11 3/16"	2'–0 5/16"	1'–8"	0.096	0.096
42"	1'–9"	5'–3"	2'–11 "	8'–2"	6'–6"	4'–5 7/8"	2'–3 1/2"	1'–10"	0.108	0.108
48"	2'–0"	6'–0"	2'–2"	8'–2"	7'–0"	4'–8 1/2"	2'–4 1/2"	1'–10"	0.120	0.120

INSTALL BAR GRATE ON PIPES 36" DIA. OR GREATER (3/8" BARS WELDED AT 6"O.C. EACH WAY)

METAL & REINFORCED CONCRETE CULVERT END

N.T.S.

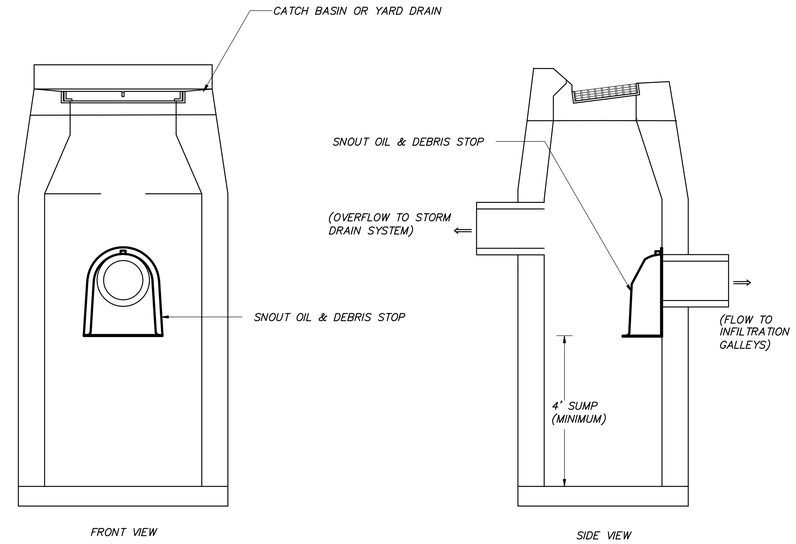

NOTES:
1. CAST NOTCHED SECTIONS IN CORBEL RISER TO FACILITATE INSTALLATION OF THE TRAP HOOD AGAINST A CONTINUOUS VERTICAL WALL WITHIN THE INTERIOR OF CATCHBASIN OR MANHOLE, AS REQUIRED.
2. WHERE NOTCHING IS REQUIRED IN CORBELS, CONTRACTOR TO SUBMIT DETAILED SHOP DRAWINGS OF CATCHBASINS OR MANHOLE PRIOR TO CASTING
3. CATCHBASINS/MANHOLES TO HAVE 4' MINIMUM SUMPS.
4. CATCHBASINS INSTALLATION SHOWN. WHERE SHOWN ON PLANS, INSTALL IN MANHOLE STRUCTURES.

SNOUT HOOD TRAP FOR CATCH BASIN (TYPICAL)

N.T.S.

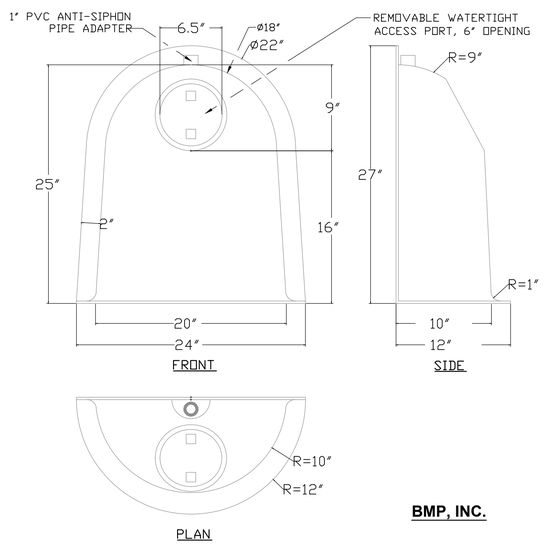

BMP, INC.

NOTE:
1. THE 18F MODEL SHOWN IS FOR ILLUSTRATIVE PURPOSES ONLY. CONTRACTOR SHALL SELECT APPROPRIATE MODEL FOR OUTLET PIPING SPECIFIED.

NOTES:
1. ALL HOODS AND TRAPS FOR CATCH BASINS AND WATER QUALITY STRUCTURES SHALL BE AS MANUFACTURED BY: BEST MANAGEMENT PRODUCTS, INC. 53 MT. ARCHER RD. LYME, CT 06371 (860) 434–0277, (860) 434–3195 FAX TOLL FREE: (800) 504–8008 OR (888) 354–7585 WEB SITE: www.bmpinc.com OR PRE-APPROVED EQUAL
2. ALL HOODS SHALL BE CONSTRUCTED OF A GLASS REINFORCED RESIN COMPOSITE WITH ISO GEL COAT EXTERIOR FINISH WITH A MINIMUM 0.125" LAMINATE THICKNESS.
3. ALL HOODS SHALL BE EQUIPPED WITH A WATERTIGHT ACCESS PORT, A MOUNTING FLANGE, AND AN ANTI–SIPHON VENT AS DRAWN. (SEE CONFIGURATION DETAIL)
4. THE SIZE AND POSITION OF THE HOOD SHALL BE DETERMINED BY OUTLET PIPE SIZE AS PER MANUFACTURER'S RECOMMENDATION.
5. THE BOTTOM OF THE HOOD SHALL EXTEND DOWNWARD A DISTANCE EQUAL TO 1/2 THE OUTLET PIPE DIAMETER WITH A MINIMUM DISTANCE OF 6" FOR PIPES <12" I.D.
6. THE ANTI–SIPHON VENT SHALL EXTEND ABOVE HOOD BY MINIMUM OF 3" AND A MAXIMUM OF 24" ACCORDING TO STRUCTURE CONFIGURATION.
7. THE SURFACE OF THE STRUCTURE WHERE THE HOOD IS MOUNTED SHALL BE FINISHED SMOOTH AND FREE OF LOOSE MATERIAL.
8. THE HOOD SHALL BE SECURELY ATTACHED TO STRUCTURE WALL WITH 3/8" STAINLESS STEEL BOLTS AND OIL–RESISTANT GASKET AS SUPPLIED BY MANUFACTURER. (SEE INSTALLATION DETAIL).
9. INSTALLATION INSTRUCTIONS SHALL BE FURNISHED WITH MANUFACTURER SUPPLIED INSTALLATION KIT. INSTALLATION KIT SHALL INCLUDE:
   A. INSTALLATION INSTRUCTIONS
   B. PVC ANTI–SIPHON VENT PIPE AND ADAPTER
   C. OIL–RESISTANT CRUSHED CELL FOAM GASKET WITH PSA BACKING
   D. 3/8" STAINLESS STEEL BOLTS
   E. ANCHOR SHIELDS
10. FOR MANHOLE APPLICATIONS, UTILIZE ROUND STYLE HOODS DESINGED FOR CIRCULAR STRUCTURES.

TRAP HOOD DETAIL

N.T.S.

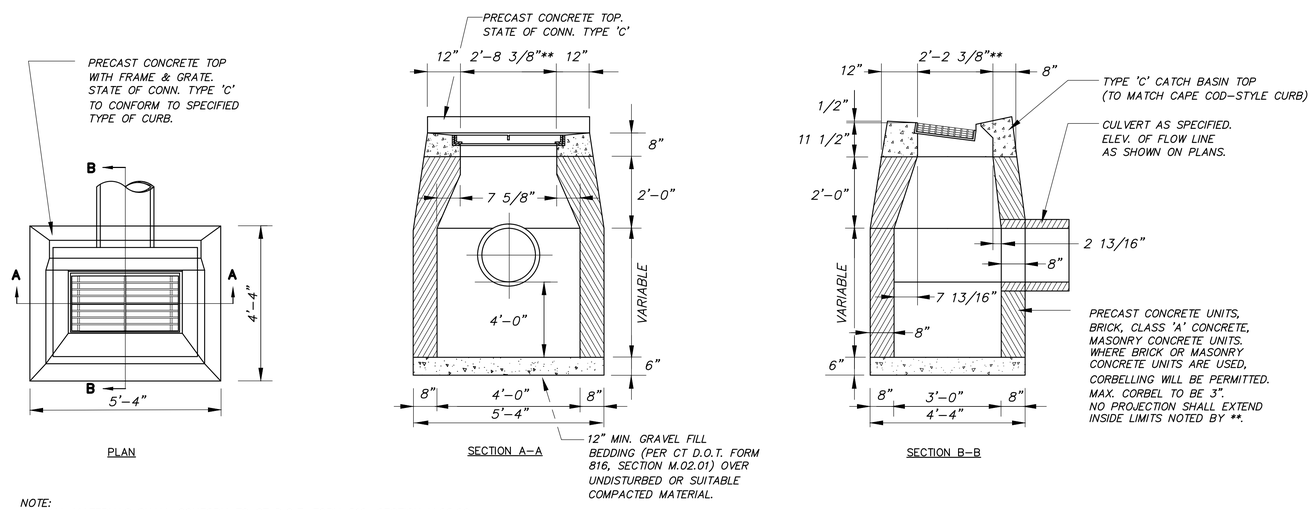

NOTE:
1. ALL MATERIALS SHALL CONFORM TO CT D.O.T. FORM 816, SECTION M.08.02.
2. PRECAST CONCRETE TOP TO MATCH PROPOSED BITUMINOUS CAPE COD CURB.
3. GRATES AND FRAME SHALL BE GALVANIZED STEEL. THERE SHALL BE NO CURB OPENING.
4. INSTALL SNOUT HOOD TRAP AT OUTLET FROM EACH CATCH BASIN.

TYPE 'C' CATCH BASIN

N.T.S.

THE LODGES AT STORRS

F. A. Hesketh & Associates, Inc.
6 Creamery Brook, East Granby, CT 06026
Phone (860) 653-8000
Fax (860) 844-8600
e-mail mail@fahesketh.com
Civil & Traffic Engineers · Surveyors · Planners · Landscape Architects

No.	Date	Description

Revisions:

DETAILS
PREPARED FOR
STORRS LODGES, LLC
HUNTING LODGE ROAD
MANSFIELD, CONNECTICUT

Date 03–18–2016	Drawn by: CAD	Job no: 04161	Sheet no: 3 OF 6
Scale: AS NOTED	Checked by: DSZ		

SD-3

C:\Users\dmelander\appdata\local\temp\Acrpublish-5776\L00sd102.dwg, SD-3, Mar. 17, 2016 – 5:32:47 PM

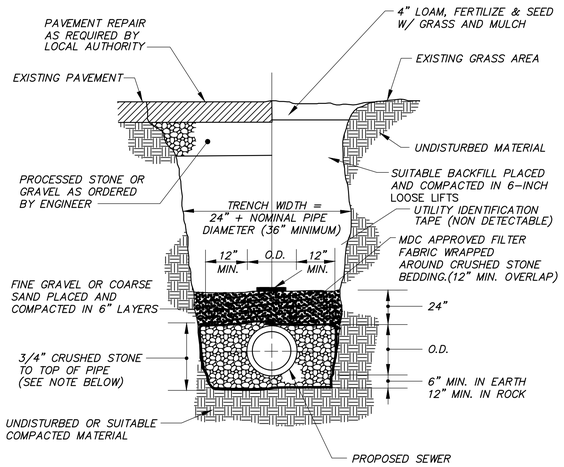

SANITARY SEWER TRENCH DETAIL

N.T.S.

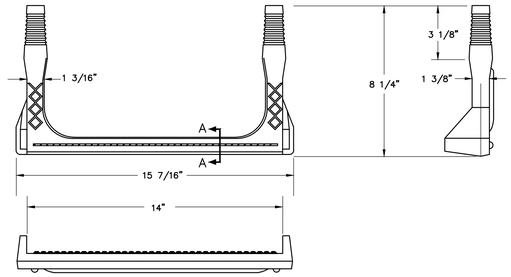

Copolymer Polypropylene Plastic

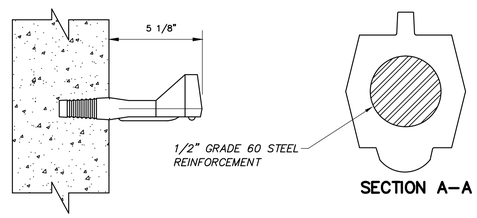

SECTION A–A

PLASTIC MANHOLE STEP

N.T.S.

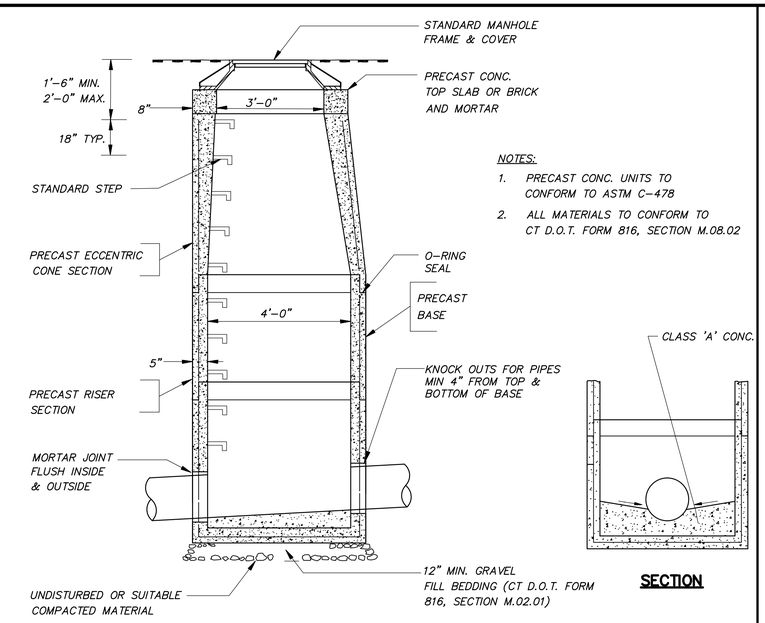

NOTES:

1. PRECAST CONC. UNITS TO CONFORM TO ASTM C-478
2. ALL MATERIALS TO CONFORM TO CT D.O.T. FORM 816, SECTION M.08.02

SECTION

STORM SEWER MANHOLE

N.T.S.

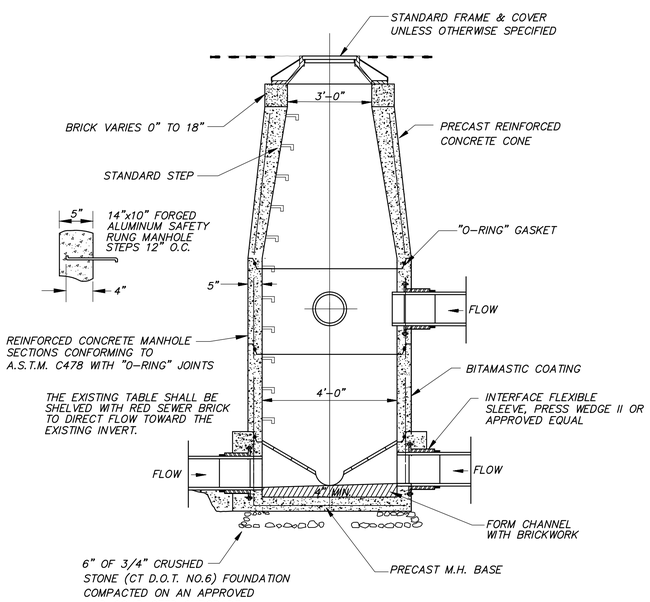

SANITARY SEWER MANHOLE

N.T.S.

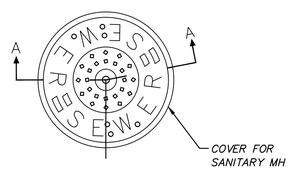

NOTE:
THE LOWER SURFACE OF THE COVER AND THE CORRESPONDING UPPER SURFACE OF THE FRAME SHALL BE MACHINE FINISHED TO PROVIDE A SMOOTH FLAT CONTACT OR FIT WITHOUT ANY TENDENCY FOR THE COVER OR GRATE TO ROCK OR RATTLE.

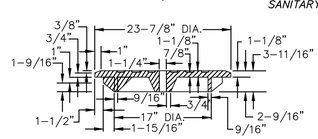

SECTION A–A

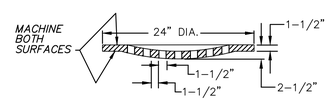

SECTION C–C

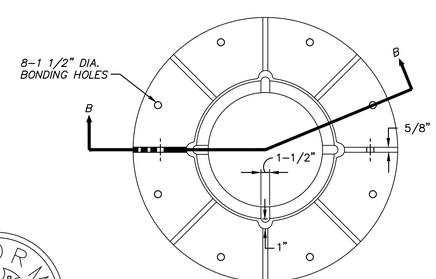

SECTION B–B

STANDARD FRAME AND COVER

N.T.S.

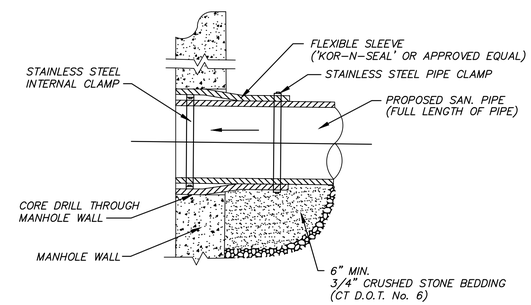

NOTE:
ALL STRAPS AND BOLTS TO BE STAINLESS STEEL

TYPICAL MANHOLE SLEEVE DETAIL

N.T.S.

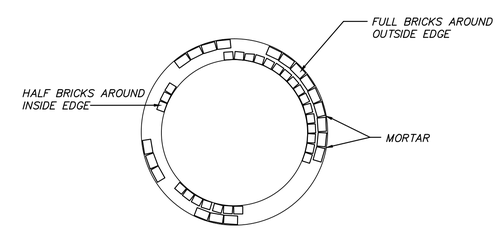

PLAN VIEW

BRICK LEVELING COURSE FOR MANHOLE

N.T.S.

THE LODGES AT STORRS

F. A. Hesketh & Associates, Inc.
6 Creamery Brook, East Granby, CT 06026
Civil & Traffic Engineers · Surveyors · Planners · Landscape Architects
Phone (860) 653-8000
Fax (860) 844-8600
e-mail mail@hesketh.com

No.	Date	Description

Revisions:

DETAILS
PREPARED FOR
STORRS LODGES, LLC
HUNTING LODGE ROAD
MANSFIELD, CONNECTICUT

Date: 03-18-2016	Drawn by: CAD	Job no: 04161	Sheet no: 4 OF 6
Scale: AS NOTED	Checked by: DSZ		

SD-4

C:\Users\vmelander\appdata\local\temp\AcPublish_5776\UDtest02.dwg, SD-4, Mar 17, 2016 - 5:35:38 PM

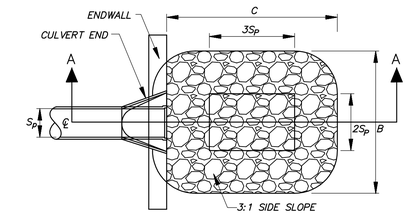

PLAN VIEW

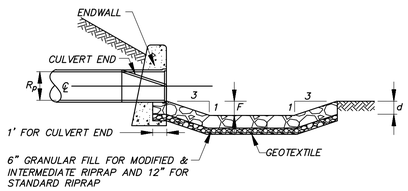

SECTION A–A

LEGEND

Sp { MAX. INSIDE PIPE SPAN (NON CIRCULAR SECTIONS)
{ INSIDE PIPE DIAMETER (CIRCULAR SECTION)

Rp { MAX. INSIDE PIPE RISE (NON CIRCULAR SECTIONS)
{ INSIDE PIPE DIAMETER (CIRCULAR SECTION)

d { 12" FOR MODIFIED RIPRAP
{ 18" FOR INTERMEDIATE RIPRAP
{ 36" FOR STANDARD RIPRAP

TYPE 1 F=0.5Rp
TYPE 2 F=Rp
C=3Sp+6F
B=2Sp+6F

PREFORMED SCOUR HOLE TYPE 1 AND TYPE 2

N.T.S.

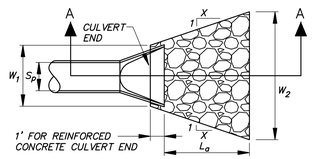

CULVERT END PLAN VIEW

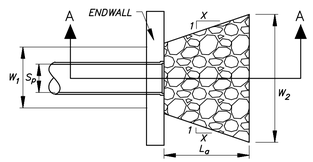

END WALL PLAN VIEW

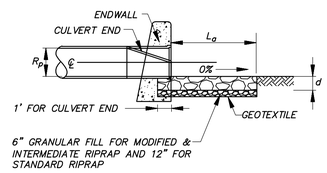

SECTION A–A
CULVERT END AND END WALL

LEGEND

Sp { MAX. INSIDE PIPE SPAN (NON CIRCULAR SECTIONS)
{ INSIDE PIPE DIAMETER (CIRCULAR SECTION)

Rp { MAX. INSIDE PIPE RISE (NON CIRCULAR SECTIONS)
{ INSIDE PIPE DIAMETER (CIRCULAR SECTION)

La { LENGTH OF RIPRAP APRON MEASURED FROM THE END OF
{ CULVERT END SECTION OR FACE OF ENDWALL

d { 12" FOR MODIFIED RIPRAP
{ 18" FOR INTERMEDIATE RIPRAP
{ 36" FOR STANDARD RIPRAP

	X	W_1	W_2
TYPE A RIPRAP APRON	3	3Sp	3Sp+0.7 La
TYPE B RIPRAP APRON	5	3Sp	3Sp+0.4 La

TYPE A & B RIPRAP APRON

N.T.S.

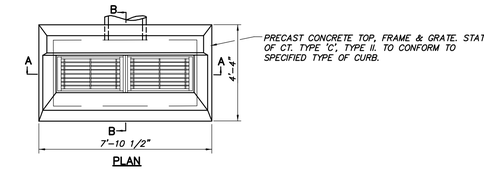

PLAN

NOTES:

1. ALL MATERIALS SHALL CONFORM TO CT D.O.T. FORM 816, SECTION M.08.02

2. WHERE PRECAST CONCRETE UNIT IS USED FOR SUMP, TOP OF THE UNIT SHALL BE AT LEAST 6" BELOW THE BOTTOM OF THE PIPE OUTLETTING FROM THE CATCH BASIN.

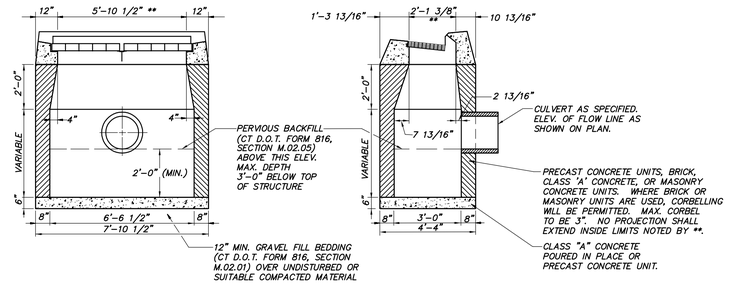

SECTION A–A SECTION B–B

TYPE 'C' CATCH BASIN DOUBLE GRATE – TYPE II

N.T.S.

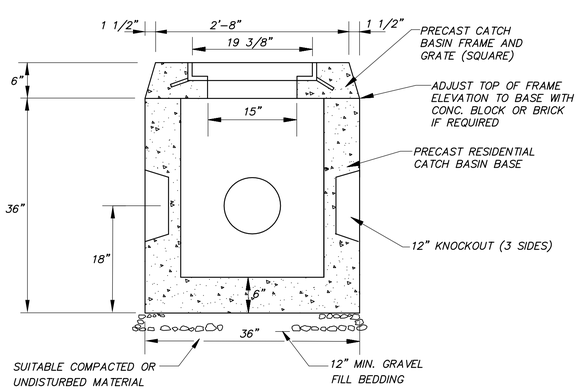

TYPE 'R' CATCH BASIN

N.T.S.

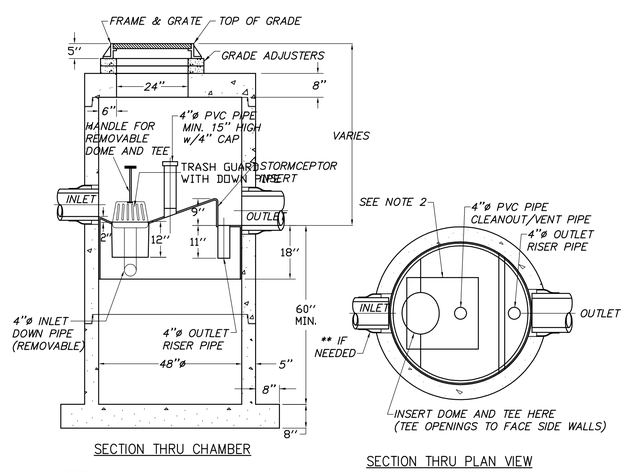

SECTION THRU CHAMBER SECTION THRU PLAN VIEW

NOTE :

1. THE USE OF FLEXIBLE CONNECTIONS IS RECOMMENDED AT THE OUTLET WHERE APPLICABLE.
2. THE COVER SHOULD BE POSITIONED OVER THE 4"ø CLEANOUT/VENT PIPE AND THE 4"ø INLET DOWN PIPE.
3. THE STORMCEPTOR SYSTEM IS PROTECTED BY ONE OR MORE OFF THE FOLLOWING U.S. PATENTS: #4985148, #5498331, #5725760, #5753115, #5849181.
4. CONTRACTOR TO PROVIDE CRANE TO SET UNIT (HEAVIEST SECTION WEIGHS 5000 LB)

STORMCEPTOR STC 450i

N.T.S.

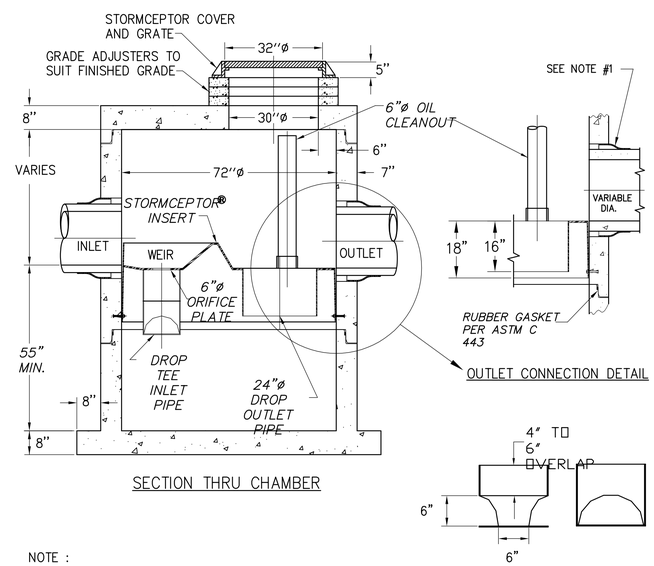

SECTION THRU CHAMBER

ENLARGED INLET TEE DROP PIPE

NOTE :

1. THE USE OF FLEXIBLE CONNECTIONS IS RECOMMENDED AT THE INLET AND OUTLET WHERE APPLICABLE.
2. THE COVER SHOULD BE POSITIONED OVER THE OUTLET DROP PIPE AND THE OIL CLEANOUT PIPE.
3. THE STORMCEPTOR SYSTEM IS PROTECTED BY ONE OR MORE OF THE FOLLOWING U.S. PATENTS: #4985148, #5498331, #5725760, #5753115, #5849181.

STORMCEPTOR STC 900

N.T.S.

THE LODGES AT STORRS

F. A. Hesketh & Associates, Inc.
6 Creamery Brook, East Granby, CT 06026
Phone (860) 653-8000
Fax (860) 844-8600
e-mail mail@fahesketh.com
Civil & Traffic Engineers · Surveyors · Planners · Landscape Architects

Revisions:

No.	Date	Description
1	03-24-2016	General

DETAILS
PREPARED FOR
STORRS LODGES, LLC
HUNTING LODGE ROAD
MANSFIELD, CONNECTICUT

Date: 03-18-2016	Drawn by: CAD	Job no: 04161	Sheet no: 5 OF 7
Scale: AS NOTED	Checked by: DSZ		

SD-5

Q:\2004\04161\2016 – January\LODset102.dwg, SD-5, Mar. 29, 2016 – 9:16:20 AM

BOTTOM OF STONE – "N"

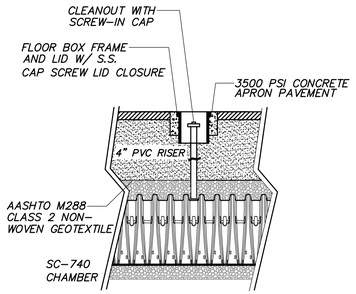

*REFER TO STORMTECH'S DESIGN MANUAL

STORMTECH SC–740 CHAMBER SYSTEM INSPECTION PORT DETAIL

N.T.S.

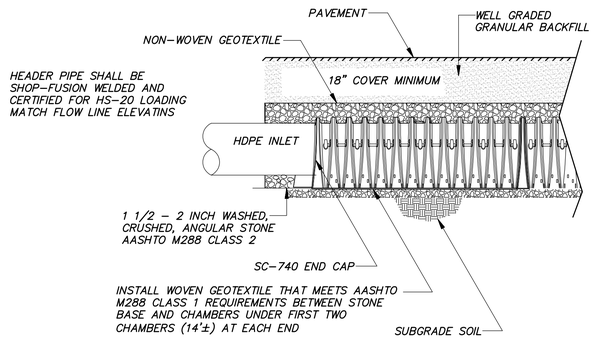

STORMTECH SC–740 CHAMBER SYSTEM TYPICAL PROFILE – INLET ROW

N.T.S.

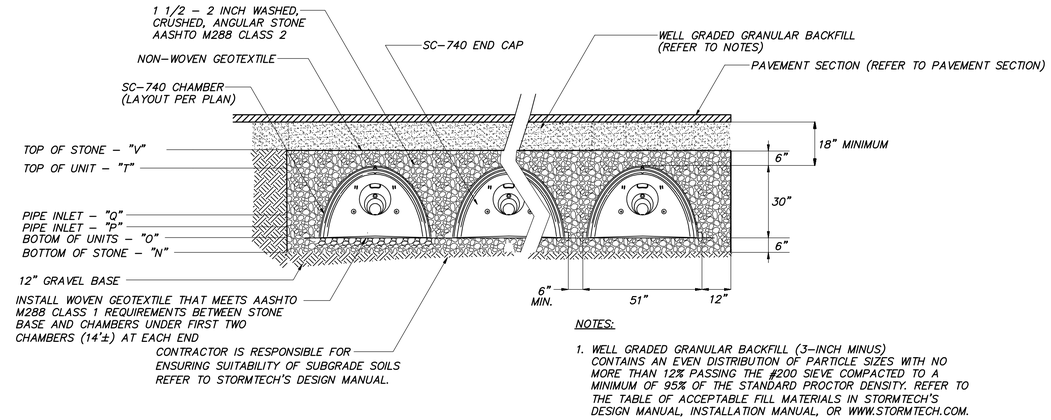

NOTES:

1. WELL GRADED GRANULAR BACKFILL (3–INCH MINUS) CONTAINS AN EVEN DISTRIBUTION OF PARTICLE SIZES WITH NO MORE THAN 12% PASSING THE #200 SIEVE COMPACTED TO A MINIMUM OF 95% OF THE STANDARD PROCTOR DENSITY. REFER TO THE TABLE OF ACCEPTABLE FILL MATERIALS IN STORMTECH'S DESIGN MANUAL, INSTALLATION MANUAL, OR WWW.STORMTECH.COM.

STORMTECH SC–740 CHAMBER SYSTEM TYPICAL CROSS SECTION

N.T.S.

	#	IIA	IVA	VIA	VIIA	VIIIA	IXA	XA
TOP OF STONE ("T"+6")	"V"	563.00	553.00	551.00	547.00	560.00	554.67	558.00
TOP OF UNIT ("O"+30")	"T"	562.50	552.50	550.50	546.50	559.50	554.17	557.50
PIPE INLET	"Q"	18"	18"	18"	18",15"	18"	12"	15"
		560.00	550.00	548.00	544.00	557.00	551.67	555.00
PIPE OUTLET	"P"	24"	18"	18"	24"	18"	12"	15"
		560.00	550.00	548.00	544.00	557.00	551.67	555.00
BOTTOM OF UNITS	"O"	560.00	550.00	548.00	544.00	557.00	551.67	555.00
BOTTOM OF STONE ("O"–6")	"N"	559.50	549.50	547.50	543.50	556.50	551.17	554.50

	#	IIA	IVA	VIA	VIIA	VIIIA	IXA	XA
INLET	"A"	24"	18"	18"	24"	18"	12"	15"
		560.00	550.00	548.00	544.00	557.00	551.67	555.00
ORIFICE (="O") *	"B"	560.00	550.00	548.00	544.00	557.00	551.67	555.00
OUTLET	"C"	18"	18"	15"	18"	15"	12"	15"
		559.90	550.00	547.74	544.00	556.35	551.67	554.00
WEIR ("B"+36")	"D"	563.00	553.00	551.00	547.81	560.00	554.67	558.00
BOTTOM ("C"–24")	"E"	557.90	548.00	545.74	542.00	554.35	549.67	552.00
TOP OF STR.	"F"	564.90	555.00	552.74	548.50	561.35	556.17	559.50
T.F. SOUTH OR EAST	"G"	567.55	556.27	556.66	549.57	563.30	556.67	561.20
T.F. NORTH OR WEST	"H"	567.45	556.21	556.75	549.55	563.50	556.70	561.40

* ALL ORIFICES ARE 6" EXCEPT FOR VIIIA = 8"

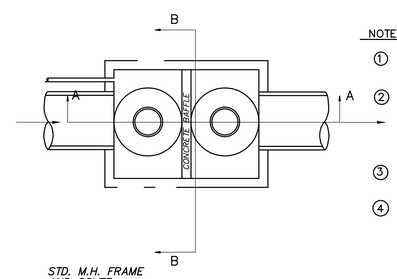

NOTES:

1. CONSTRUCTION JOINT – SEALED WITH 1" DIA. BUTYL RUBBER OR EQUIVALENT.
2. DESIGN LOADING – STANDARD UNITS: AASHTO H10–44. OPTIONAL UNITS: AASHTO HS20–44. STEEL REINFORCEMENT – ASTM A615, GRADE 60, 1" MIN. COVER. CONCRETE MINIMUM STRENGTH– 5,000 P.S.I. @ 28 DAYS. MAXIMUM HEIGHT OF EACH ADDITIONAL PIECE 4'–0".
3. MAXIMUM INSIDE HEIGHT FOR 2 PIECE CHAMBER 8'–0". ROOF AND SIDE WALL OPENINGS AS SPECIFIED.
4. ADJUST M.H. FRAME TO SUIT REQUIRED FIELD HEIGHT.

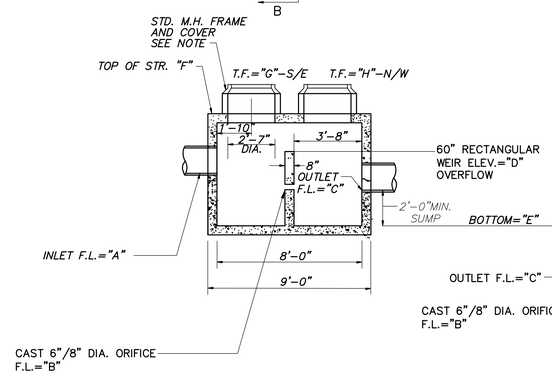

SECTION A–A

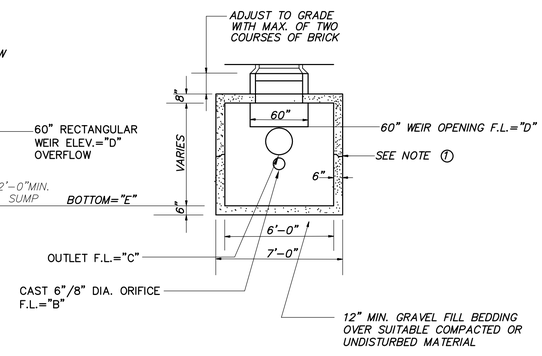

SECTION B–B

UNDERGROUND STORAGE OUTLET STRUCTURE # IIA, IVA, VIA, VIIA, VIIIA, IXA, & XA.

N.T.S.

THE LODGES AT STORRS

F.A. Hesketh & Associates, Inc.
6 Creamery Brook, East Granby, CT 06026
Civil & Traffic Engineers • Surveyors • Planners • Landscape Architects
Phone (860) 653-8000
Fax. (860) 844-8600
e-mail mail@fahesketh.com

Revisions:

No.	Date	Description
1	03-24-2016	General

DETAILS
PREPARED FOR
STORRS LODGES, LLC
HUNTING LODGE ROAD
MANSFIELD, CONNECTICUT

Date: 03-18-2016 | Drawn by: CAD | Job no: 04161
Scale: AS NOTED | Checked by: DSZ | Sheet no: 6 OF 7

SD-6

Q:\2004\04161\2016 – January\Lodsd102.dwg, SD-6, Mar 29, 2016 – 2:26:51 PM

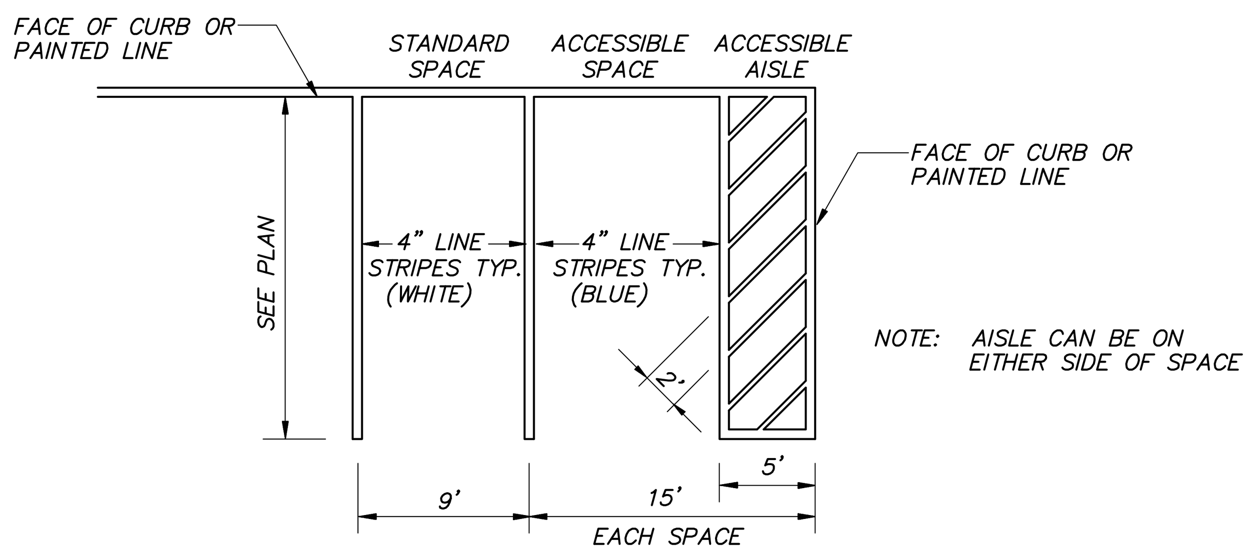

ACCESSIBLE PARKING SPACE LAYOUT

N.T.S.

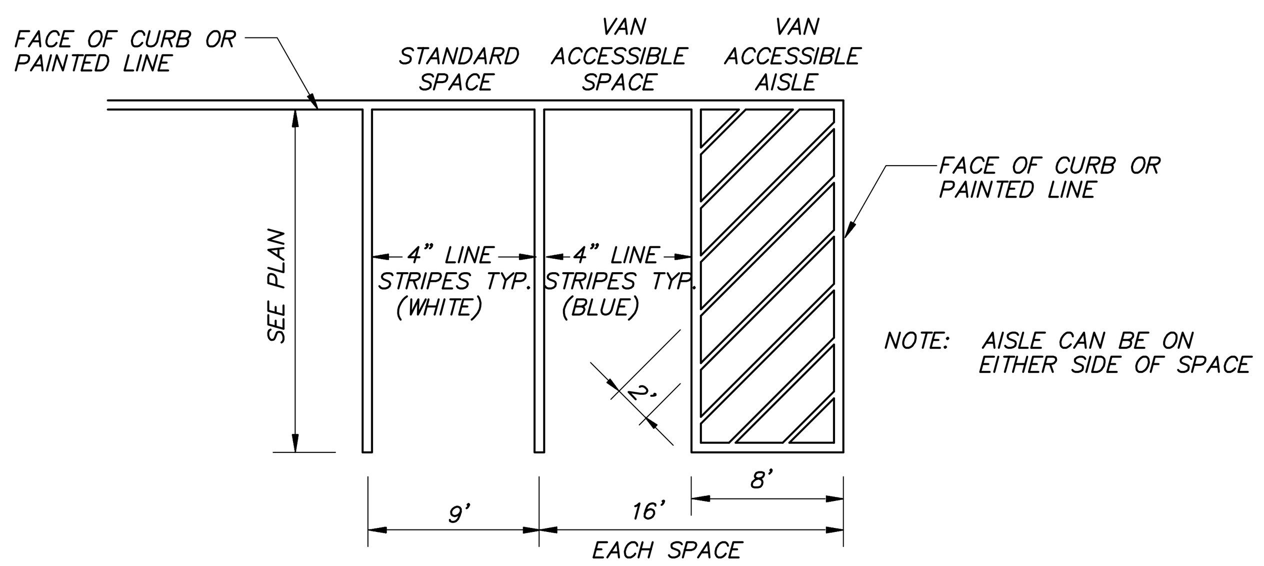

ACCESSIBLE VAN PARKING SPACE LAYOUT

N.T.S.

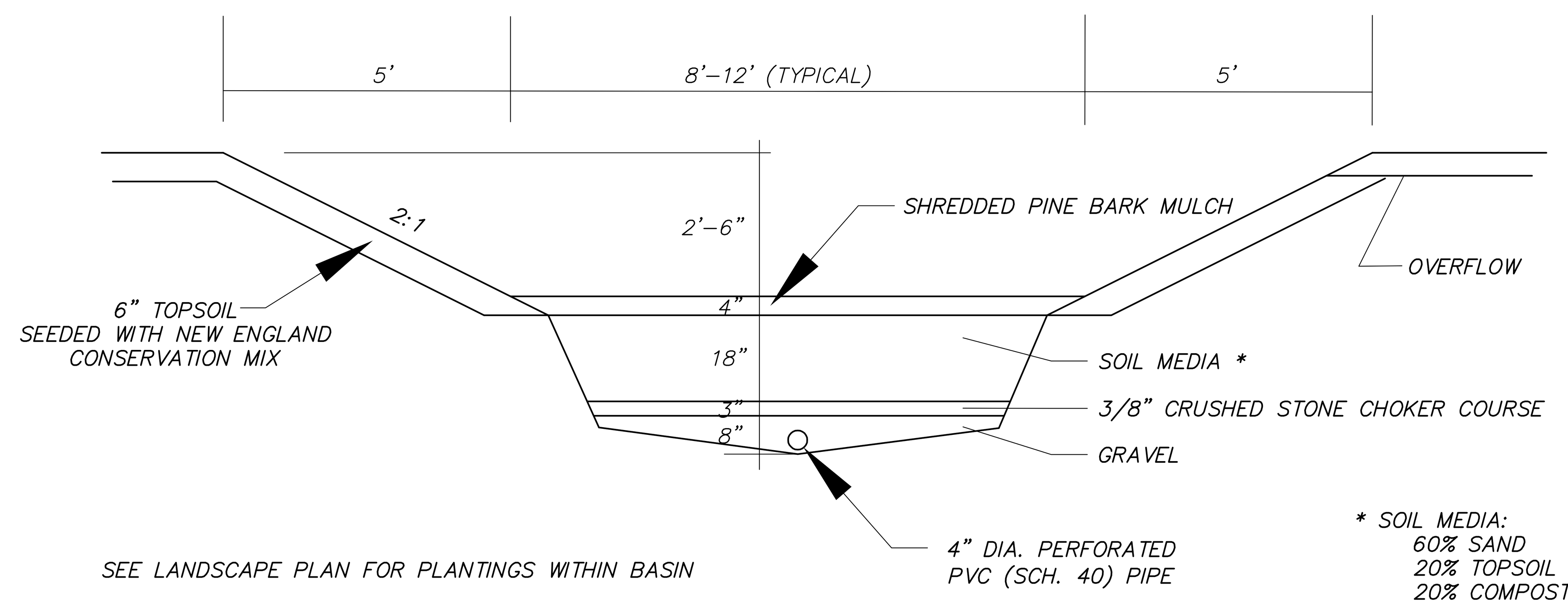

BIO–RETENTION BASIN

1"=2'

ACO WILDLIFE
DRWG# 1619 Date: 12.17.02
WWW.ACOUSA.COM

INSTALLATION DRAWING

AT500: Amphibian Guidance System
Load Class A-D: Asphalt

ACO Polymer Products Inc.
P.O. Box 245
Chardon, OH 44024
PH: 440-285-7000
FX: 440-285-8517
e-mail: sales@acousa.com

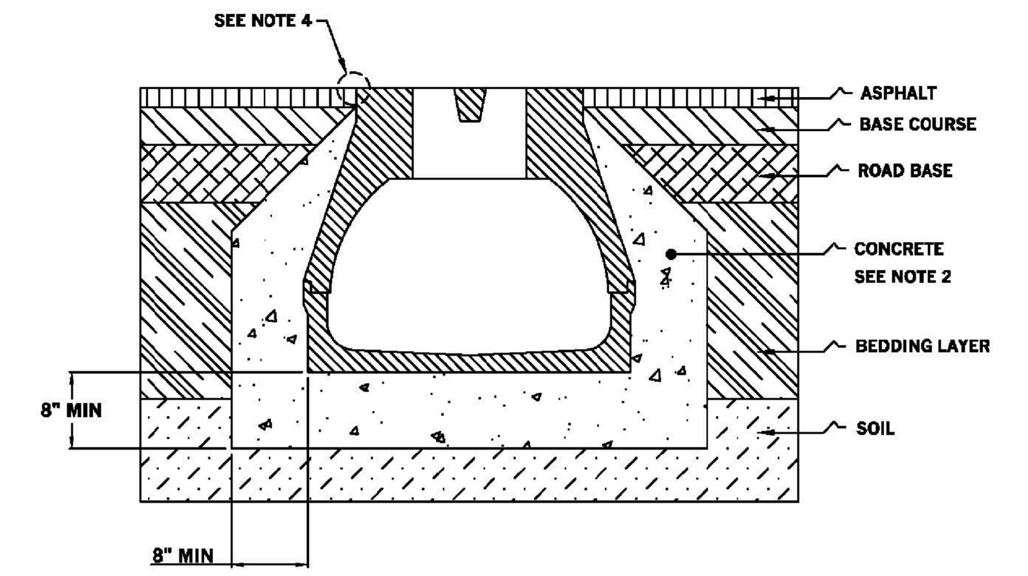

NOTES:
1. It is necessary to ensure the minimum dimensions shown are suitable for the existing ground conditions. *Engineering advice may be required.*
2. A minimum concrete strength of 3000 PSI is recommended. The concrete should be vibrated to eliminate air pockets.
3. The finished level of the surround must be approx. 1/8" above the top of the channel edge.
4. Refer to ACO'S latest installation instructions for complete details.

ACO WILDLIFE
DRWG# 1619 Date: 12.17.02
WWW.ACOUSA.COM

AT500: Amphibian Guidance System

SPECIFICATION CLAUSE

ACO Polymer Products Inc.
P.O. Box 245
Chardon, OH 44024
PH: 440-285-7000
FX: 440-285-8517
e-mail: sales@acousa.com

The surface drainage system shall be polymer concrete AT500 tunnel system with a slotted upper surface as manufactured by ACO Polymer Products, Inc., Chardon, Oh.

Tunnels will be manufactured from polyester resin polymer concrete.

The system shall be 19.7 inches (500mm) nominal inside width with a 23.6 in. (599mm) overall width.

The complete Amphibian Guidance System shall be by ACO Polymer Products, Inc. Any deviation or partial system design and/or improper installation will void any and all warranties provided by ACO Polymer Products, Inc.

The tunnel sytem shall be independantly certified to withstand loadings to load class D (DIN19580). The tunnel system shall have a slotted upper surface to ensure the climatic conditions remain constant.

Polymer Concrete shall have material properties of: compressive strength range between 14,000-14,500 psi; flexural strength between 3600-4500 psi; tensile strength of 1500 psi. The material water absorption rate shall not exceed 0.1 % by weight and shall be resistant to prolonged salt exposure, repetitive frost cycles and chemically resistant to dilute acids and alkalis.

The system shall be installed in accordance with the manufacturer's instructions and recommendations.

WILDLIFE TUNNEL INSTALLATION

N.T.S.

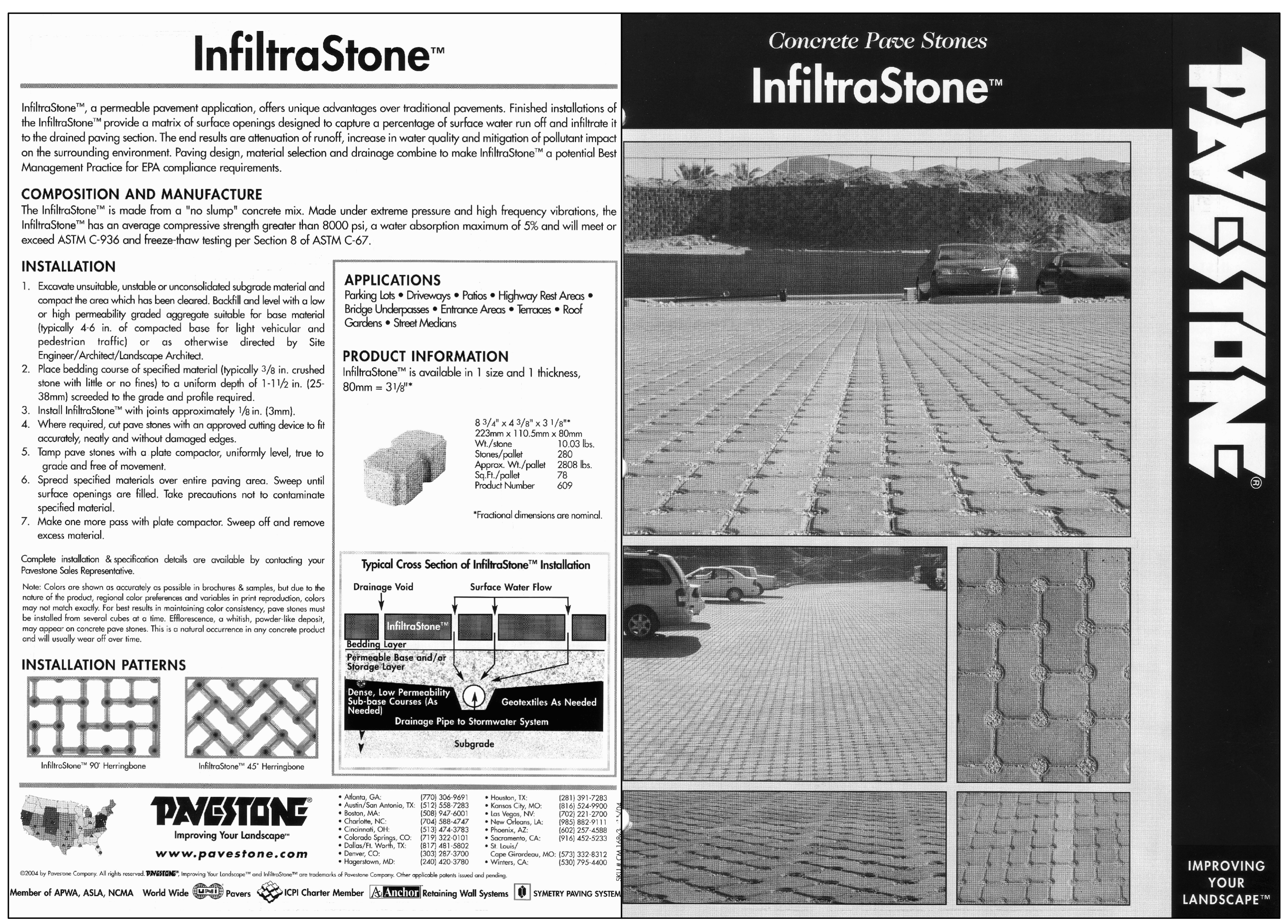

InfiltraStone™

InfiltraStone™, a permeable pavement application, offers unique advantages over traditional pavements. Finished installations of the InfiltraStone™ provide a matrix of surface openings designed to capture a percentage of surface water run off and infiltrate it to the drained paving section. The end results are attenuation of runoff, increase in water quality and mitigation of pollutant impact on the surrounding environment. Paving design, material selection and drainage combine to make InfiltraStone™ a potential Best Management Practice for EPA compliance requirements.

COMPOSITION AND MANUFACTURE

The InfiltraStone™ is made from a "no slump" concrete mix. Made under extreme pressure and high frequency vibrations, the InfiltraStone™ has an average compressive strength greater than 8000 psi, a water absorption maximum of 5% and will meet or exceed ASTM C-936 and freeze-thaw testing per Section 8 of ASTM C-67.

INSTALLATION

1. Excavate unsuitable, unstable or unconsolidated subgrade material and compact the area which has been cleared. Backfill and level with a low or high permeability graded aggregate suitable for base material (typically 4-6 in. of compacted base for light vehicular and pedestrian traffic) or as otherwise directed by Site Engineer/Architect/Landscape Architect.
2. Place bedding course of specified material (typically 3/8 in. crushed stone with little or no fines) to a uniform depth of 1-1½ in. (25-38mm) screeded to the grade and profile required.
3. Install InfiltraStone™ with joints approximately 1/8 in. (3mm).
4. Where required, cut pave stones with an approved cutting device to fit accurately, neatly and without damaged edges.
5. Tamp pave stones with a plate compactor, uniformly level, true to grade and free of movement.
6. Spread specified materials over entire paving area. Sweep until surface openings are filled. Take precautions not to contaminate specified material.
7. Make one more pass with plate compactor. Sweep off and remove excess material.

Complete installation & specification details are available by contacting your Pavestone Sales Representative.

Note: Colors are shown as accurately as possible in brochures & samples, but due to the nature of the product, regional color preferences and variables in print reproduction, colors may not match exactly. For best results in maintaining color consistency, pave stones must be installed from several cubes at a time. Efflorescence, a whitish, powder-like deposit, may appear on concrete pave stones. This is a natural occurrence in any concrete product and will usually wear off over time.

INSTALLATION PATTERNS

InfiltraStone™ 90° Herringbone
InfiltraStone™ 45° Herringbone

APPLICATIONS

Parking Lots • Driveways • Patios • Highway Rest Areas • Bridge Underpasses • Entrance Areas • Terraces • Roof Gardens • Street Medians

PRODUCT INFORMATION

InfiltraStone™ is available in 1 size and 1 thickness, 80mm = 3⅛"*

8 3/4" x 4 3/8" x 3 1/8"*
223mm x 110.5mm x 80mm

Wt./stone	10.03 lbs.
Stones/pallet	280
Approx. Wt./pallet	2808 lbs.
Sq.Ft./pallet	78
Product Number	609

*Fractional dimensions are nominal.

Typical Cross Section of InfiltraStone™ Installation

Drainage Void
Surface Water Flow
InfiltraStone™
Bedding Layer
Permeable Base and/or Storage Layer
Dense, Low Permeability Sub-base Courses (As Needed)
Geotextiles As Needed
Drainage Pipe to Stormwater System
Subgrade

PAVESTONE
Improving Your Landscape™
www.pavestone.com

• Atlanta, GA:	(770) 306-9691	• Houston, TX:	(281) 391-7283
• Austin/San Antonio, TX:	(512) 558-7283	• Kansas City, MO:	(816) 524-9900
• Boston, MA:	(508) 947-6001	• Las Vegas, NV:	(702) 221-2700
• Charlotte, NC:	(704) 588-4747	• New Orleans, LA:	(985) 882-9111
• Cincinnati, OH:	(513) 474-3783	• Phoenix, AZ:	(602) 257-4588
• Colorado Springs, CO:	(719) 322-0101	• Sacramento, CA:	(916) 452-5233
• Dallas/Ft. Worth, TX:	(817) 481-5802	• St. Louis/ Cape Girardeau, MO:	(573) 332-8312
• Denver, CO:	(303) 287-3700	• Winters, CA:	(530) 795-4400
• Hagerstown, MD:	(240) 420-3780		

©2004 by Pavestone Company. All rights reserved. PAVESTONE, Improving Your Landscape™ and InfiltraStone™ are trademarks of Pavestone Company. Other applicable patents issued and pending.

Member of APWA, ASLA, NCMA World Wide UNI Pavers ICPI Charter Member Anchor Retaining Wall Systems SYMETRY PAVING SYSTEM

Concrete Pave Stones

InfiltraStone™

PAVESTONE®

IMPROVING YOUR LANDSCAPE™

'PAVESTONE' PERVIOUS PAVEMENT SYSTEM

N.T.S.

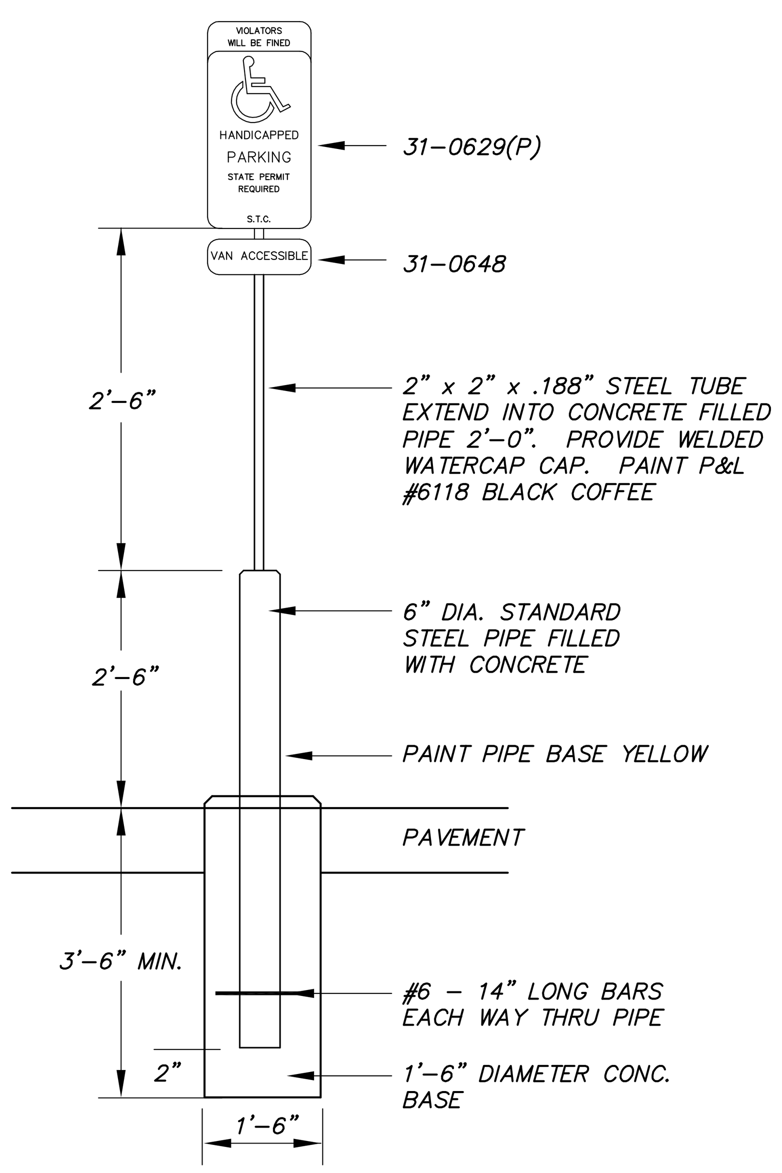

ACCESSIBLE SPACE SIGN POST/BASE

N.T.S.

ACO WILDLIFE

Description	Part No.	Length in. (mm)	Width in. (mm)	Height in. (mm)	Wgt lbs
Tunnel					
KT500 Tunnel	**11120**	39.37 (1000)	24.80 (630)	20.47 (520)	566.5
Fence System					
Fence	**99705**	39.37 (1000)	20.67 (525)	17.20 (437)	17.6
Post	**99708**	30.00 (762)	1.57 (70)	-	2.5
Nail (bag of 20)	**99710**	7.00 (178)	0.25 (6) dia	-	1.5
Tunnel Entrance					
AT500 tunnel entrance	**99712**	29.53 (750)	21.47 (545)	20.47 (520)	46.0
Swallow tail (optional)	**99707**	78.74 (2000)	0.25 (6)	5.91 (150)	8.4

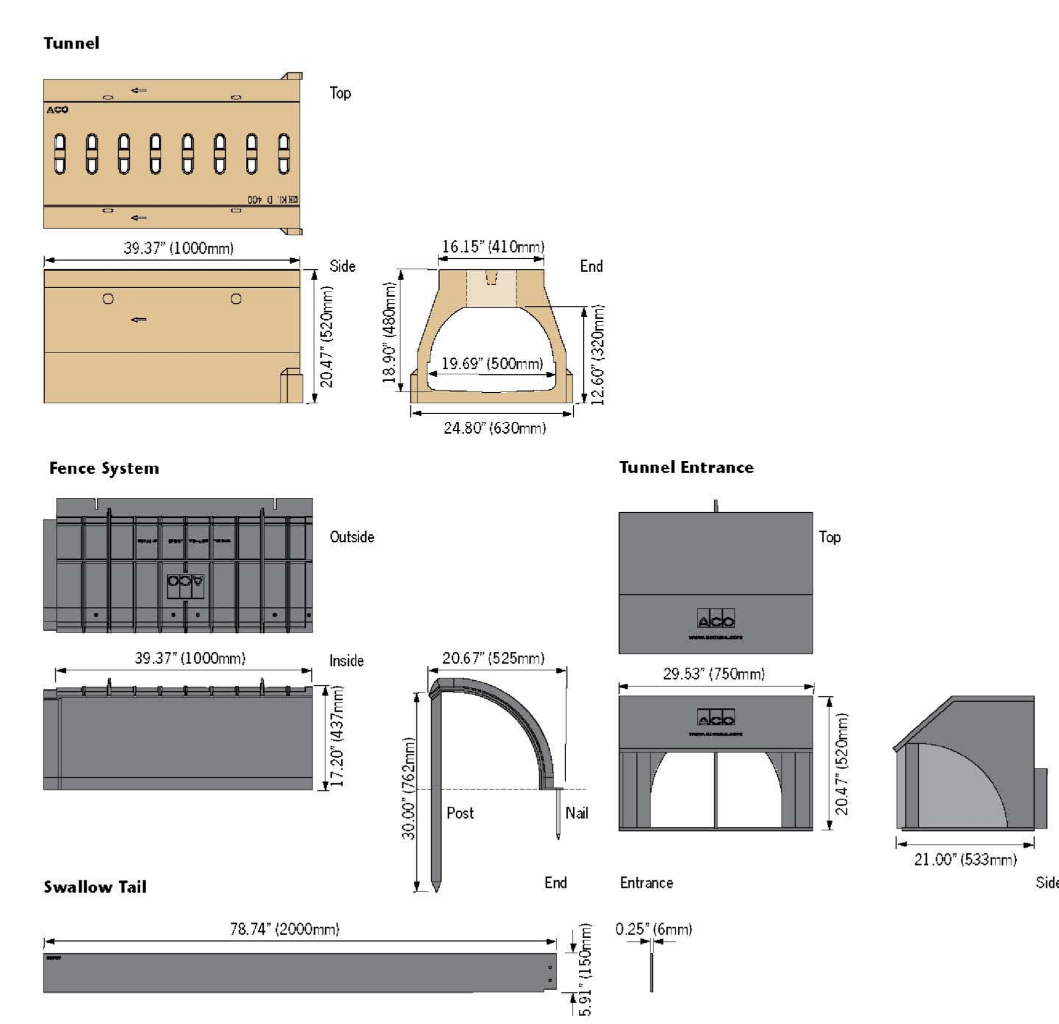

6

www.acousa.com/wildlife

WILDLIFE TUNNEL AND GUIDANCE FENCE

N.T.S.

THE LODGES AT STORRS

FAH
F. A. Hesketh & Associates, Inc.
6 Creamery Brook, East Granby, CT 06026
Civil & Traffic Engineers • Surveyors • Planners • Landscape Architects
Phone (860) 653-8000
Fax (860) 844-8600
e-mail mail@fahesketh.com

Revisions:

No.	Date	Description
1	03–24–2016	General

DETAILS
PREPARED FOR
STORRS LODGES, LLC
HUNTING LODGE ROAD
MANSFIELD, CONNECTICUT

Date: 03–18–2016	Drawn by: CAD	Job no: 04161
Scale: AS NOTED	Checked by: DSZ	Sheet no: 7 OF 7

SD-7

Q:\2004\04161\2016 – January\LODsd102.dwg, SD–7, Mar. 29, 2016 – 9:17:54 AM

PROJECT DESCRIPTION:

The project site, The Lodges at Storrs, consists of a 45.93 acre parcel of undeveloped land located on the west side of Hunting Lodge Road, just south of the existing Carriage House Apartments. The applicant is proposing to construct a 692-bed student apartment complex consisting of 47 two story buildings and a 10,000 s.f. community building. The application includes on-site parking for approximately 558 vehicles. Best Management Practices (BMP's) are being employed on the drainage system. The crossing of the flagged wetlands from the main driveway out to Hunting Lodge Road is being accomplished using a pre-cast concrete arch bridge which minimizes the disturbance to the wetlands on the property.

CONSTRUCTION SEQUENCE:

In general, the overall project will follow the sequence below:

1. Contact "call before you dig" at 1-800-922-4455 at least 48 hours prior to the start of construction to have existing utilities marked.
2. A pre-construction meeting and authorization to proceed will be required prior to start of any construction, including demolition, removal of trees or stripping of land. Procedures for such pre-construction meeting and authorization to proceed shall be in accordance with Town and State requirements. The contractor is responsible for arranging this meeting with Town and State officials.
3. Install temporary traffic controls, construction fencing, as required, or as necessary to protect the public.
4. Install temporary soil erosion and sedimentation control measures as shown on the plan or as required to meet specific site conditions, including items listed below, prior to the start of any clearing, demolition or excavation.
5. Install sediment fence, hay bale check dams, and construction exits.
6. Stake clearing limits and flag trees to remain. No site clearing to begin until stakeout approved by the Town and Engineer.
7. Construct temporary sedimentation collection basins as directed by the Engineer.
8. Schedule and coordinate relocation of utilities, including water mains and other utilities indicated on the plans.
9. On Northwood Road and Hunting Lodge Road saw cut pavement and demolish pavement, curbing and landscaping required for installation of new utility services.
10. On Northwood Road install new water main and hydrants.
11. On Northwood Road install new sanitary sewer.
12. Complete site clearing and grubbing and begin rough grading.
13. Install borrow fill and grade pad sites for start of buildings and site improvements. Begin building foundations.
14. Begin installation of underground utilities.
15. Begin installation of the pre-cast concrete arch bridge crossing.
16. Install storm drainage structures and culverts, underground infiltration devices, and outlet structures. Install hay bales around drainage structures as they are completed.
17. Complete grading to subgrade.
18. Compact subgrade.
19. Place and regrade pavement base utilizing existing processed pavement material, as allowed, and additional gravel subbase and processed aggregate base as required.
20. Install pavement binder course and curbing.
21. Install concrete sidewalk, bike path, and other site amenities.
22. Install pavement wearing course.
23. Place topsoil and landscape materials.
24. Install pavement markings and signs.
25. Remove erosion controls after disturbed areas are landscaped and mulched or new lawn areas are stabilized, and as approved by the Town.
26. Remove sediment from storm drainage system and riprap aprons as required.
27. The approximate date for start of construction is the Fall of 2016 and the estimated completion date is the Summer of 2018.

EROSION CONTROL DEVICES:

Refer to the "Connecticut Guidelines For Soil Erosion And Sediment Control - 2002" (see Erosion and Sediment Control Note 3) when constructing erosion control devices shown on this plan.

HBEC - HAYBALE EROSION CHECKS shall be staked a minimum of five (5) feet from the base of disturbed slopes exceeding eight (8) feet in height, or at locations shown on the plans. Place haybales before starting a fill slope and after digging a cut slope. Heel haybales 4" into the soil. Stake haybales around the perimeter of all catch basins. Remove all sediment when deposits reach 1/2 bale height. Haybales must be replaced periodically.

SFEC - SEDIMENT FENCE EROSION CHECK: a synthetic textile barrier designed to filter sediment from surface water runoff. Placement shall be similar to HBEC and installation requires anchoring the fence bottom to prevent bypass. All sediment shall be removed if deposits reach one (1) foot in depth. Additional support (such as snow fence or wire fence) on the downhill face may be required to strengthen sediment fence in high flow locations.

CE - CONSTRUCTION EXIT: a broken stone pad providing a hard surface points where vehicles will leave the site. The construction exits reduce tracking of sediment into adjacent pavement. Excess sediment should be periodically removed from the stone surface.

RRPP - RIP RAP PLUNGE POOL: a riprap lined apron installed at a zero percent grade to absorb the initial impact of stormwater discharge from the storm drainage system and further reduce flow velocities to prevent erosion downstream. RROP is designed per the "Connecticut Department of Transportation, Drainage Manual - 2000"

RRSW - RIP RAP SWALE: a swale with rip rap lining installed to to absorb the energy of flowing stormwater and reduce flow velocities to prevent erosion of the channel.

FES - FLARED END SECTION: a precast concrete culvert or formed polyethylene end structure designed to spread runoff to greater width of flow.

EROSION AND SEDIMENT CONTROL NOTES

1. Disturbance of soil surfaces is regulated by State Law. All work shall comply with an approved "Erosion and Sediment Control Plan" to prevent or minimize soil erosion.
2. The installation and maintenance of erosion control devices is the responsibility of the land owner, developer, and the excavation contractor. Town officials shall be notified in writing of the name, address and telephone number of the individual responsible for this work (including any changes) at the required pre-construction conference.
3. The contractor shall use the "Connecticut Guidelines for Soil Erosion and Sediment Control" (2002), as amended as a guide in constructing the erosion and sediment controls indicated on these plans. The guidelines may be obtained from the Connecticut Department of Environmental Protection store, 79 Elm Street, Hartford, CT 06106-5127.
4. The contractor shall schedule operations to limit disturbance to the smallest practical area for the shortest possible time. Overall site disturbance shall be confined to those limits delineated on the plans.
5. The contractor is responsible for the timely installation, inspection, repair or replacement of erosion control devices to insure proper operation.
6. The contractor shall notify the design engineer of unsatisfactory erosion conditions not controlled by the erosion and sediment control plan and shall install additional measures as required.
7. All disturbed areas not covered by buildings, pavement, mulch or ground cover plantings shall be planted with grass.
8. Once 1/3 height occurs, accumulated sediment removed from erosion control devices is to be spread and stabilized in level, erosion resistant locations as general fill.
9. Special attention shall be given to the construction sequence outlined on the erosion and sediment control plan.
10. The contractor shall be responsible for cleaning any construction debris or sediment from existing roads as ordered by the Town and/or State, if any debris or sediment from construction activities enter onto these roadways.
11. Limit work within wetland areas to the least disturbance necessary for construction. Restore disturbed areas as closely as possible to their original natural state.
12. Additional dust control measures as specified in D.O.T. 816 Section 9.39, Section 9.42 and Section 9.43 shall be furnished by the contractor as site conditions warrant or as directed by Town or State officials.
13. The contractor is responsible for cleaning and removal of sediment and/or debris from the storm drainage system throughout the duration of the project (i.e. sumps, plunge pools, level spreaders, etc.)
14. Additional rolls of silt fence and haybales shall be maintained on site by the contractor for use during emergency conditions.
15. Due to the area of proposed disturbance, this project will require a stormwater permit from the Connecticut Department of Environmental Protection. A copy of this permit, and the required Stormwater Pollution Prevention Plan, shall be submitted to the town prior to the start of any construction.
16. The contractor is responsible for developing a final construction phasing plan submitted to the Engineer for approval prior to the start of site and/or off-site construction activities.

GENERAL NOTES:

1. Existing topography developed from aerial photogrammetrics and limited filed survey completed by F. A. Hesketh and Associates, Inc.
2. Bearings and coordinates depicted hereon refer to 1927 North American Datum (NAD 27).
3. Elevations depicted hereon are based on NGVD 29.
4. All work on this project shall be completed in conformance with the requirements of the various federal, State, and local permits issued for this project, including the Town of Mansfield Inland Wetland and Watercourses Commission permit and the Town of Mansfield Planning and Zoning Commission Site Plan and Special Permit approvals. The contractor is responsible for complying with the relevant conditons of approval/permits.
5. A pre-construction meeting and authorization to proceed will be required prior to start of any construction, including demolition, removal of trees or stripping of land. Procedures for such pre-construction meeting and authorization to proceed shall be in accordance with Town and State requirements. The contractor is responsible for arranging this meeting with Town and State officials.
6. Prior to any excavation the contractor shall verify all underground utilities by calling 1-800-922-4455 at least 48 hours in advance.
7. All work and materials to conform to Town of Mansfield standard specifications, D.O.T. Form 816 (as amended), custodial utility company specifications, the details shown on these plans, or the project specifications, as applicable.
8. Erosion and sedimentation control measures shall be installed and maintained in accordance with the plan, specifications, and the erosion and sedimentation control notes.
9. Drainage shall be maintained throughout the project so as not to cause flooding of roadways or damage to private property.
10. Connect all roof leaders into new storm sewer system.
11. Trees shall be flagged and approved, prior to removal.
12. Trees and vegetation identified to be saved shall be protected from construction equipment by suitable means approved by Town staff.
13. Removal of trees or other vegetation, or re-grading substantially different from that shown on the approved site plan, will not be permitted without prior authorization by the Town or State, as applicable.
14. No stumps are to be buried on site.
15. All debris shall be removed from the site by the contractor.
16. All exterior lighting shall not be directed onto abutting properties or roadways.
17. Handicapped accessible parking spaces shall be marked and signed in accordance with current state and town requirements.
18. Fire Lanes shall be marked and signed as required by the Fire Marshall. The contractor shall coordinate this work with the Fire Marshall prior to installation.

GENERAL GRADING NOTES:

1. Set frames of all manholes, catch basins, gas and water gates, hand holes, meter boxes, and all other utility appurtenances to match proposed finish grade.
2. On Northwood Road and Hunting Lodge Road, saw cut existing pavement along limits of work. construct pavement match detail to Town of Mansfield standards. Blend all new work to match existing.
3. Fine grade all areas to preclude ponding.
4. Grade transitions to roadways to maintain gutter flow, where present, and to preclude ponding.

SCHEDULE AND DESCRIPTION OF RESPONSIBILITY FOR MAINTENANCE OF THE ON-SITE STORM WATER SYSTEM:

1. Maintenance of the on-site storm water system is the responsibility of the property owner. This includes all biofilters, catch basins, stormceptor units, Stormtech infiltrators, system piping, manholes, roof leaders and system outfall and riprap.
2. The following schedule of maintenance shall be followed:

   a. In general, good housekeeping practices shall be incorporated into the routine site and facility maintenance plan to minimize deposition of sediment, litter and contaminants into the storm drainage system.

   b. Paved parking and loading areas and walks shall be swept of debris, sand, and litter at least twice annually, in particular, late spring after winter sanding operations, and in late fall after leaf litter cleanup.

   c. Biofilters, catch basins and stormceptor units shall be inspected annually, following spring site cleanup. Accumulated sediment and debris shall be removed and disposed of to approved off-site locations.

   d. Rip rap and crushed stone erosion control shall be inspected annually. Excess sediments shall be removed and repairs made when erosion is noted.
3. Maintenance records documenting system inspection and cleaning operations shall be maintained by the property owner and shall be made available for inspection by the Town as requested.

GENERAL UTILITY NOTES:

1. PVC drain pipe=sch. 40 PVC pipe, sewer pipe = SDR 35 PVC pipe w/ push-on gasketed joints.
2. CPE = corrugated polyethylene pipe conforming to CT DOT 816, M.08.01-25, type S.
3. The location of all utilities shown is approximate and are based on available as-built information from utility company records, the property owner, and limited survey data. All existing utilities may not be shown. The contractor is responsible for determining the exact location of all utilities on the site prior to the start of any construction activity and notifying the design site engineer of any adjustments to the plans which are necessary. Test pits will be required at all proposed utility crossings in order to determine underground utility locations and to identify potential conflicts with vertical and horizontal alignments shown on the plans. Test pits shall be completed by the contractor at his expense.
4. Contact "call before you dig" at 1-800-922-4455 to mark the location of all underground utilities at least 72 hours prior to start of construction.
5. Remove/abandon all existing utilities required for construction of site improvements whether or not shown on these plans. All work shall be in accordance with custodial utility company requirements.
6. Flow line and invert elevations of all storm and sanitary sewers must be coordinated with final architectural drawings. Notify design engineer of conflicts prior to start of construction.
7. All materials and installation per Town of Mansfield, CT DOT Form 816, or custodial utility company specification, as appropriate.
8. All new site utilities are to be installed underground unless indicated otherwise.
9. All utilities to be installed in accordance with utility company applicable requirements. Final location of utility connections is subject to revision by individual utility companies prior to the installation. The contractor is responsible for coordinating the work with the applicable utility companies.
10. Catch basins, manholes, and other drainage structures shall conform to CT DOT Form 816 Section M.08.02
11. Water service installation and existing water service termination is to be coordinated with CT Water Co. and UCONN facilities staff prior to the start of work by the contractor.
12. All work and materials for water main and service shall conform to UCONN specifications and requirements.
13. All water main and service piping shall be ANSI/AWWA C151/A21.51 C.L.D.I.P. Class 52, unless otherwise specified. All water service shall have a minimum cover of 4 1/2 feet.
14. All fittings and valves shall be mechanical joint and shall be restrained using joint retainer glands, and concrete thrust blocks, unless otherwise specified. All valves shall open left.
15. Fire hydrant locations shall be approved by the Mansfield Fire Marshall prior to installation. Coordination with the Fire Marshall is the responsibility of the contractor.
16. All work related to gas, electric, telephone and communication service shall be in accordance with the custodial utility company standards and specifications
17. All work and materials for sanitary sewer shall conform to UCONN specifications and requirements.

THE LODGES AT STORRS

F.A.H. F. A. Hesketh & Associates, Inc.
6 Creamery Brook, East Granby, CT 06026
Civil & Traffic Engineers · Surveyors · Planners · Landscape Architects
Phone (860) 653-8000
Fax (860) 844-8600
e-mail mail@fahesketh.com

Revisions:

No.	Date	Description

NOTES
PREPARED FOR
STORRS LODGES, LLC
HUNTING LODGE ROAD
MANSFIELD, CONNECTICUT

Date: 03-18-2016 | Drawn by: CAD | Job no: 04161
Scale: N.T.S. | Checked by: DSZ | Sheet no: 1 OF 1

NT-1

C:\Users\dmelander\appdata\local\temp\AcPublish_5776\L00nt102.dwg, NT-1, Mar. 17, 2016 - 8:08:30 PM

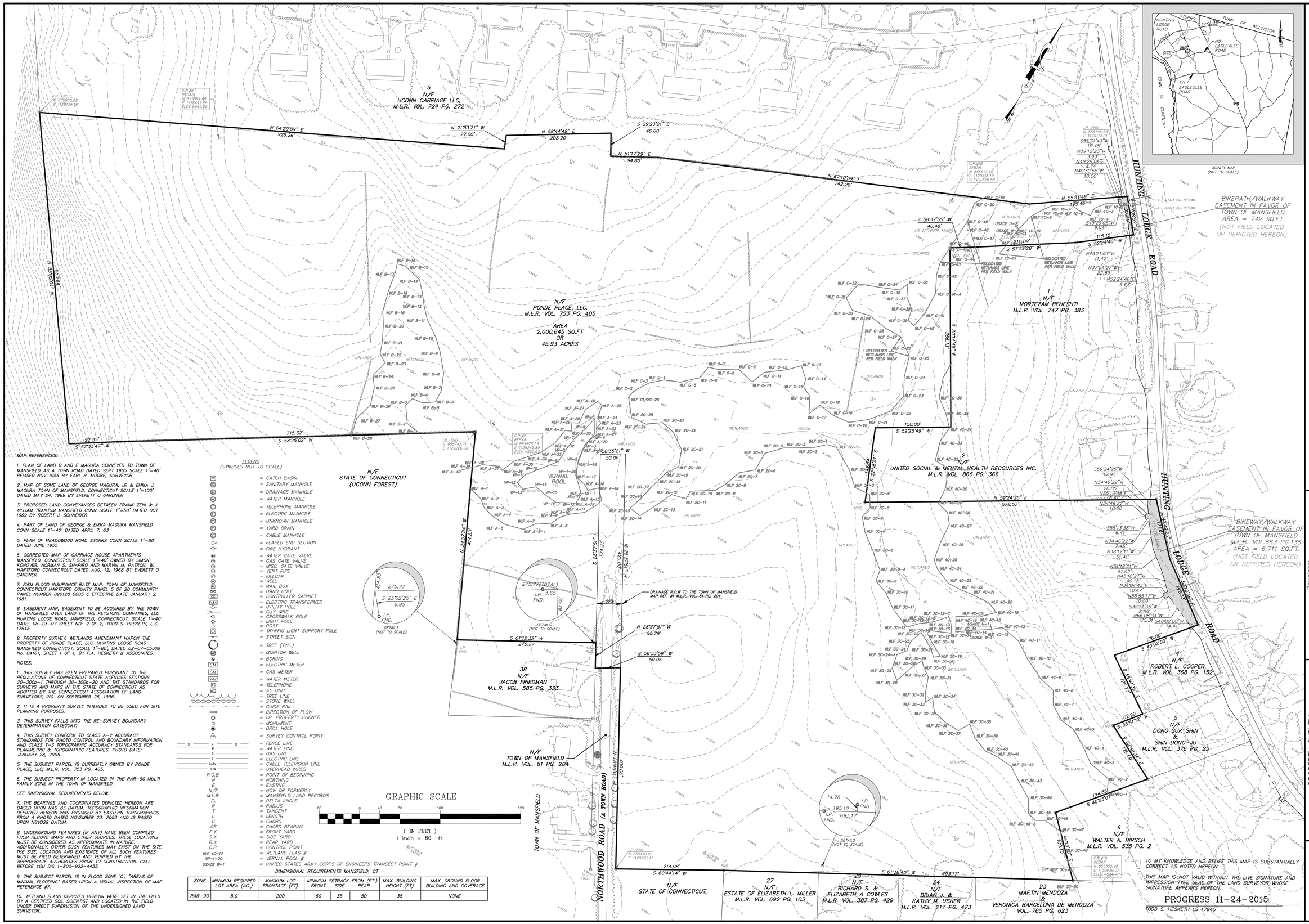

MAP REFERENCES:

1. PLAN OF LAND G AND E MAGURA CONVEYED TO TOWN OF MANSFIELD AS A TOWN ROAD DATED SEPT 1955 SCALE 1"=40' REVISED NOV 1956 BY EARL R. MOORE, SURVEYOR

2. MAP OF SOME LAND OF GEORGE MAGURA, JR & EMMA J. MAGURA TOWN OF MANSFIELD, CONNECTICUT SCALE 1"=100' DATED MAY 24, 1969 BY EVERETT O GARDNER

3. PROPOSED LAND CONVEYANCES BETWEEN FRANK ZENI & J. WILLIAM TRANTUM MANSFIELD CONN SCALE 1"=50' DATED OCT 1969 BY ROBERT J. SCHNEIDER

4. PART OF LAND OF GEORGE & EMMA MAGURA MANSFIELD CONN SCALE 1"=40' DATED APRIL 7, 63

5. PLAN OF MEADOWOOD ROAD STORRS CONN SCALE 1"=80' DATED JUNE 1955

6. CORRECTED MAP OF CARRIAGE HOUSE APARTMENTS MANSFIELD, CONNECTICUT SCALE 1"=40' OWNED BY SIMON KONOVER, NORMAN S. SHAPIRO AND MARVIN M. PATRON, W. HARTFORD CONNECTICUT DATED AUG. 12, 1968 BY EVERETT O GARDNER

7. FIRM FLOOD INSURANCE RATE MAP, TOWN OF MANSFIELD, CONNECTICUT HARTFORD COUNTY PANEL 5 OF 20 COMMUNITY PANEL NUMBER 090128 0005 C EFFECTIVE DATE JANUARY 2, 1981.

8. EASEMENT MAP, EASEMENT TO BE ACQUIRED BY THE TOWN OF MANSFIELD OVER LAND OF THE KEYSTONE COMPANIES, LLC. HUNTING LODGE ROAD, MANSFIELD, CONNECTICUT, SCALE 1"=40' DATE: 08-23-07 SHEET NO: 2 OF 2, TODD S. HESKETH, L.S. 17945

9. PROPERTY SURVEY, WETLANDS AMENDMANT MAPON THE PROPERTY OF PONDE PLACE, LLC, HUNTING LODGE ROAD MANSFIELD CONNECTICUT, SCALE 1"=80', DATED 02-07-05JOB No. 04161, SHEET 1 OF 1, BY F.A. HESKETH & ASSOCIATES.

NOTES:

1. THIS SURVEY HAS BEEN PREPARED PURSUANT TO THE REGULATIONS OF CONNECTICUT STATE AGENCIES SECTIONS 20-300b-1 THROUGH 20-300b-20 AND THE STANDARDS FOR SURVEYS AND MAPS IN THE STATE OF CONNECTICUT AS ADOPTED BY THE CONNECTICUT ASSOCIATION OF LAND SURVEYORS, INC. ON SEPTEMBER 26, 1996.

2. IT IS A PROPERTY SURVEY INTENDED TO BE USED FOR SITE PLANNING PURPOSES.

3. THIS SURVEY FALLS INTO THE RE-SURVEY BOUNDARY DETERMINATION CATEGORY.

4. THIS SURVEY CONFORM TO CLASS A-2 ACCURACY STANDARDS FOR PHOTO CONTROL AND BOUNDARY INFORMATION AND CLASS T-3 TOPOGRAPHIC ACCURACY STANDARDS FOR PLANIMETRIC & TOPOGRAPHIC FEATURES. PHOTO DATE: JANUARY 28, 2005.

5. THE SUBJECT PARCEL IS CURRENTLY OWNED BY PONDE PLACE, LLC, M.L.R. VOL. 753 PG. 405.

6. THE SUBJECT PROPERTY IN LOCATED IN THE RAR-90 MULTI FAMILY ZONE IN THE TOWN OF MANSFIELD.

SEE DIMENSIONAL REQUIREMENTS BELOW.

7. THE BEARINGS AND COORDINATES DEPICTED HEREON ARE BASED UPON NAD 83 DATUM. TOPOGRAPHIC INFORMATION DEPICTED HEREON WAS PROVIDED BY EASTERN TOPOGRAPHICS FROM A PHOTO DATED NOVEMBER 23, 2003 AND IS BASED UPON NGVD29 DATUM.

8. UNDERGROUND FEATURES (IF ANY) HAVE BEEN COMPILED FROM RECORD MAPS AND OTHER SOURCES. THESE LOCATIONS MUST BE CONSIDERED AS APPROXIMATE IN NATURE. ADDITIONALLY, OTHER SUCH FEATURES MAY EXIST ON THE SITE. THE SIZE, LOCATION AND EXISTENCE OF ALL SUCH FEATURES MUST BE FIELD DETERMINED AND VERIFIED BY THE APPROPRIATE AUTHORITIES PRIOR TO CONSTRUCTION. CALL BEFORE YOU DIG 1-800-922-4455.

9. THE SUBJECT PARCEL IS IN FLOOD ZONE 'C', "AREAS OF MINIMAL FLOODING" BASED UPON A VISUAL INSPECTION OF MAP REFERENCE #7.

10. WETLAND FLAGS DEPICTED HEREON WERE SET IN THE FIELD BY A CERTIFIED SOIL SCIENTIST AND LOCATED IN THE FIELD UNDER DIRECT SUPERVISION OF THE UNDERSIGNED LAND SURVEYOR.

LEGEND
(SYMBOLS NOT TO SCALE)

- = CATCH BASIN
- = SANITARY MANHOLE
- = DRAINAGE MANHOLE
- = WATER MANHOLE
- = TELEPHONE MANHOLE
- = ELECTRIC MANHOLE
- = UNKNOWN MANHOLE
- = YARD DRAIN
- = CABLE MANHOLE
- = FLARED END SECTION
- = FIRE HYDRANT
- = WATER GATE VALVE
- = GAS GATE VALVE
- = MISC. GATE VALVE
- = VENT PIPE
- = FILLCAP
- = WELL
- = MAIL BOX
- = HAND HOLE
- CC = CONTROLLER CABINET
- ELEC = ELECTRIC TRANSFORMER
- = UTILITY POLE
- = GUY WIRE
- = CROSSWALK POLE
- = LIGHT POLE
- = POST
- = TRAFFIC LIGHT SUPPORT POLE
- = STREET SIGN
- = TREE (TYP.)
- = MONITOR WELL
- = BORING
- EM = ELECTRIC METER
- GM = GAS METER
- WM = WATER METER
- = TELEPHONE
- = AC UNIT
- = TREE LINE
- = STONE WALL
- = GUIDE RAIL
- = DIRECTION OF FLOW
- = I.P. PROPERTY CORNER
- = MONUMENT
- = DRILL HOLE
- = SURVEY CONTROL POINT
- = FENCE LINE
- = WATER LINE
- G = GAS LINE
- E = ELECTRIC LINE
- CATV = CABLE TELEVISION LINE
- OHW = OVERHEAD WIRES
- P.O.B. = POINT OF BEGINNING
- N = NORTHING
- E = EASTING
- N/F = NOW OR FORMERLY
- M.L.R. = MANSFIELD LAND RECOROS
- Δ = DELTA ANGLE
- R = RADIUS
- T = TANGENT
- L = LENGTH
- C = CHORD
- CB = CHORD BEARING
- F.Y. = FRONT YARD
- S.Y. = SIDE YARD
- R.Y. = REAR YARD
- C.P. = CONTROL POINT
- WLF A-17 = WETLAND FLAG #
- VP-1-20 = VERNAL POOL #
- USACE W-1 = UNITED STATES ARMY CORPS OF ENGINEERS TRANSECT POINT #

DIMENSIONAL REQUIREMENTS MANSFIELD, CT

ZONE	MINIMUM REQUIRED LOT AREA (AC.)	MINIMUM LOT FRONTAGE (FT)	MINIMUM SETBACK FROM (FT.) FRONT	SIDE	REAR	MAX. BUILDING HEIGHT (FT)	MAX. GROUND FLOOR BUILDING AND COVERAGE
RAR-90	5.0	200	60	35	50	35	NONE

TO MY KNOWLEDGE AND BELIEF THIS MAP IS SUBSTANTIALLY CORRECT AS NOTED HEREON.

THIS MAP IS NOT VALID WITHOUT THE LIVE SIGNATURE AND IMPRESSION TYPE SEAL OF THE LAND SURVEYOR, WHOSE SIGNATURE APPEARS HEREON.

PROGRESS 11-24-2015

TODD S. HESKETH LS 17945

F. A. Hesketh & Associates, Inc.
6 Creamery Brook, East Granby, CT 06026
Civil & Traffic Engineers · Surveyors · Planners · Landscape Architects
Phone (860) 653-8000
Fax (860) 844-8600
e-mail mail@fahesketh.com

No.	Date	Description
1	06-27-07	MISC
2	10-27-15	WETLANDS / TITLE UPDATED
3	03-18-16	SUBMITTAL / TITLE

PROPERTY SURVEY
PREPARED FOR
STORRS LODGES, LLC.
HUNTING LODGE ROAD
MANSFIELD, CONNECTICUT

Date: 02-07-05	Drawn by: RM	Job no: 04161
Scale: 1" = 80'	Checked by: TSH	Sheet no: 1 OF 1

PS-1

Q:\2004\04161\Survey\01PS111.dwg, PS-1, Mar 17, 2016 - 4:09:41 PM

FRONT ELEVATION | SCALE: 3/16"=1'-0" | 1

REAR ELEVATION @ HIGH VIS. | SCALE: 3/16"=1'-0" | 2

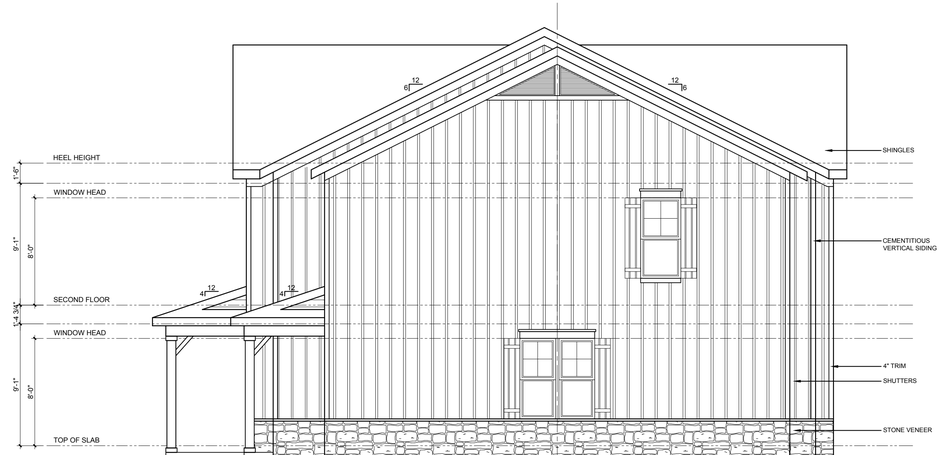

SIDE ELEVATION @ HIGH VIS. | SCALE: 3/16"=1'-0" | 3

ktgy ARCHITECTURE+PLANNING

CLIENT:

EdR

COLLEGIATE HOUSING

CONSULTANT:

Consultant Name

Address 1
Address 2
P: ###.###.####
Website

SEAL

STORRS LODGE BUILDING A

CLIENT: EdR

REV	DATE	PRELIMINARY DESCRIPTION

DESIGN DELIVERABLE: _

ISSUE DATE:

PROJECT NUMBER: **20140673.00**

DRAWN BY: --

CHECKED BY: --

Copyright (c) by KTGY, Inc. All Rights Reserved.

SHEET TITLE:

FRONT AND REAR ELEVATIONS

SHEET NUMBER:

A-200

T:\Pre 2016\Single Family\EdR\20140673_Storrs Lodge\00_Building A\PDF\2016.03.14 - SINGLE SHEET\Building A Elevations.dwg 3/14/2016 12:20:17 PM

ELEVATION 3 | SCALE: 3/16"=1'-0" | 3

ELEVATION 2 | SCALE: 3/16"=1'-0" | 2

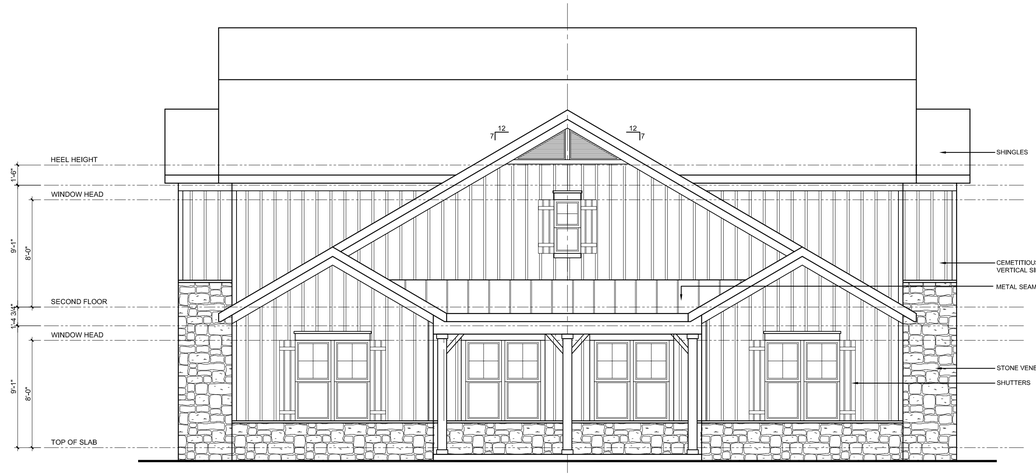

ELEVATION 1 | SCALE: 3/16"=1'-0" | 1

ktgy
ARCHITECTURE+PLANNING

CLIENT:

EdR

COLLEGIATE HOUSING

CONSULTANT:

Consultant Name

Address 1
Address 2
P: ###.###.####
Website

SEAL

STORRS LODGE BUILDING B

CLIENT: EdR

REV	DATE	DESCRIPTION
1	02/26/2016	PRELIMINARY

DESIGN DELIVERABLE: _

ISSUE DATE:

PROJECT NUMBER: **20140673.00**

DRAWN BY: --

CHECKED BY: --

Copyright (c) by KTGY, Inc. All Rights Reserved.

SHEET TITLE:

ELEVATIONS

SHEET NUMBER:

A-200

T:\Pre 2016\Single Family\EdR\20140673_Storrs Lodge\00_Building B\PDF\2016.03.14 SINGLE SHEET LAYOUT\Building B Elevations.dwg 3/14/2016 12:08:40 PM

LOWER LEVEL PLAN | SCALE: 1/4"=1'-0" | 1

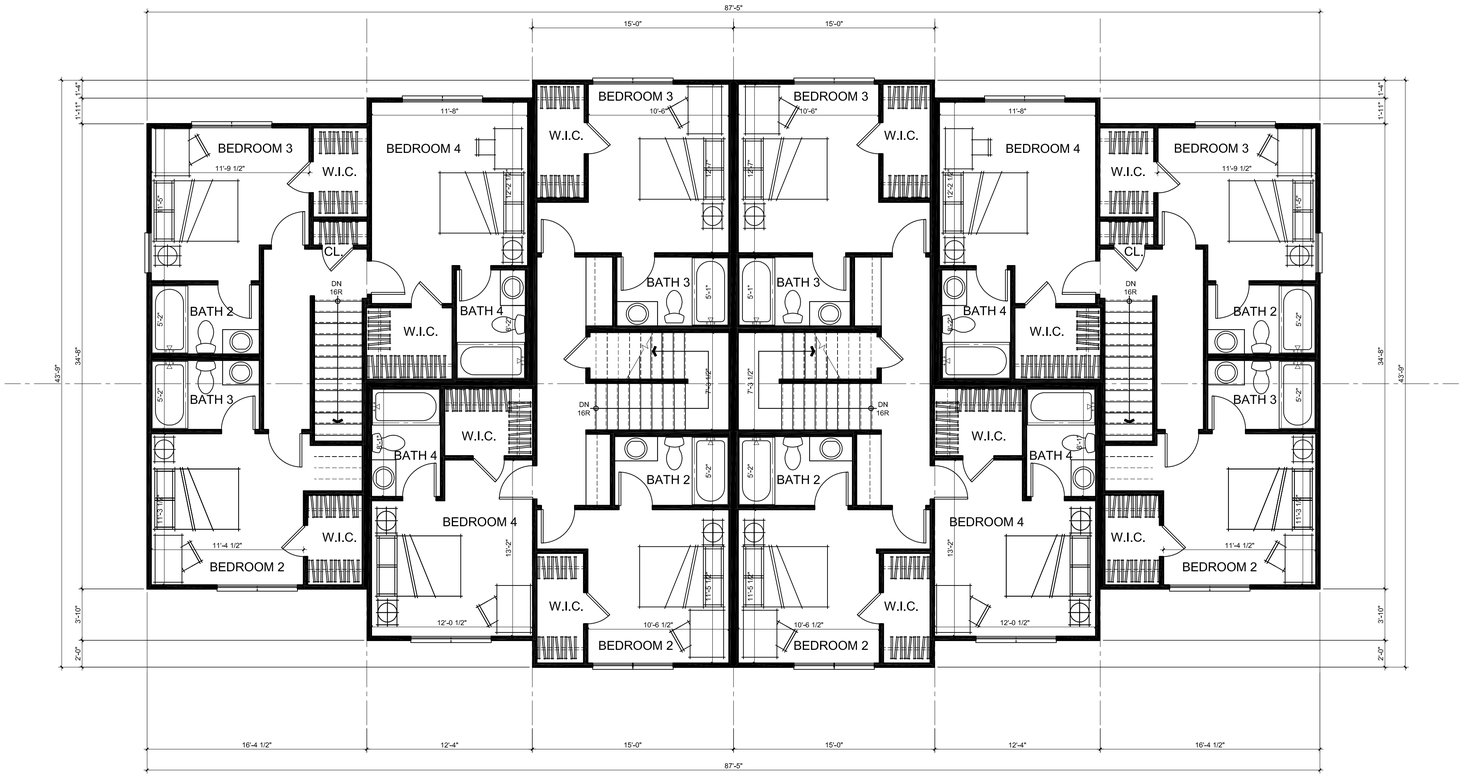

UPPER LEVEL PLAN | SCALE: 1/4"=1'-0" | 2

ktgy ARCHITECTURE+PLANNING

CLIENT:

EdR

COLLEGIATE HOUSING

CONSULTANT:

Consultant Name

Address 1
Address 2
P: ###.###.####
Website

SEAL

STORRS LODGE BUILDING A

_

CLIENT: EdR

REV	DATE	PRELIMINARY DESCRIPTION

DESIGN DELIVERABLE: _

ISSUE DATE:

PROJECT NUMBER: **20140673.00**

DRAWN BY: --

CHECKED BY: --

Copyright (c) by KTGY, Inc. All Rights Reserved.

SHEET TITLE:

LOWER LEVEL PLAN

SHEET NUMBER:

A-100

T:\Pre 2016\Single Family\EdR\20140673_Storrs Lodge\00_Building A\PDF\2016.03.14 - SINGLE SHEET\Building A Plans.dwg 3/14/2016 11:58:32 AM

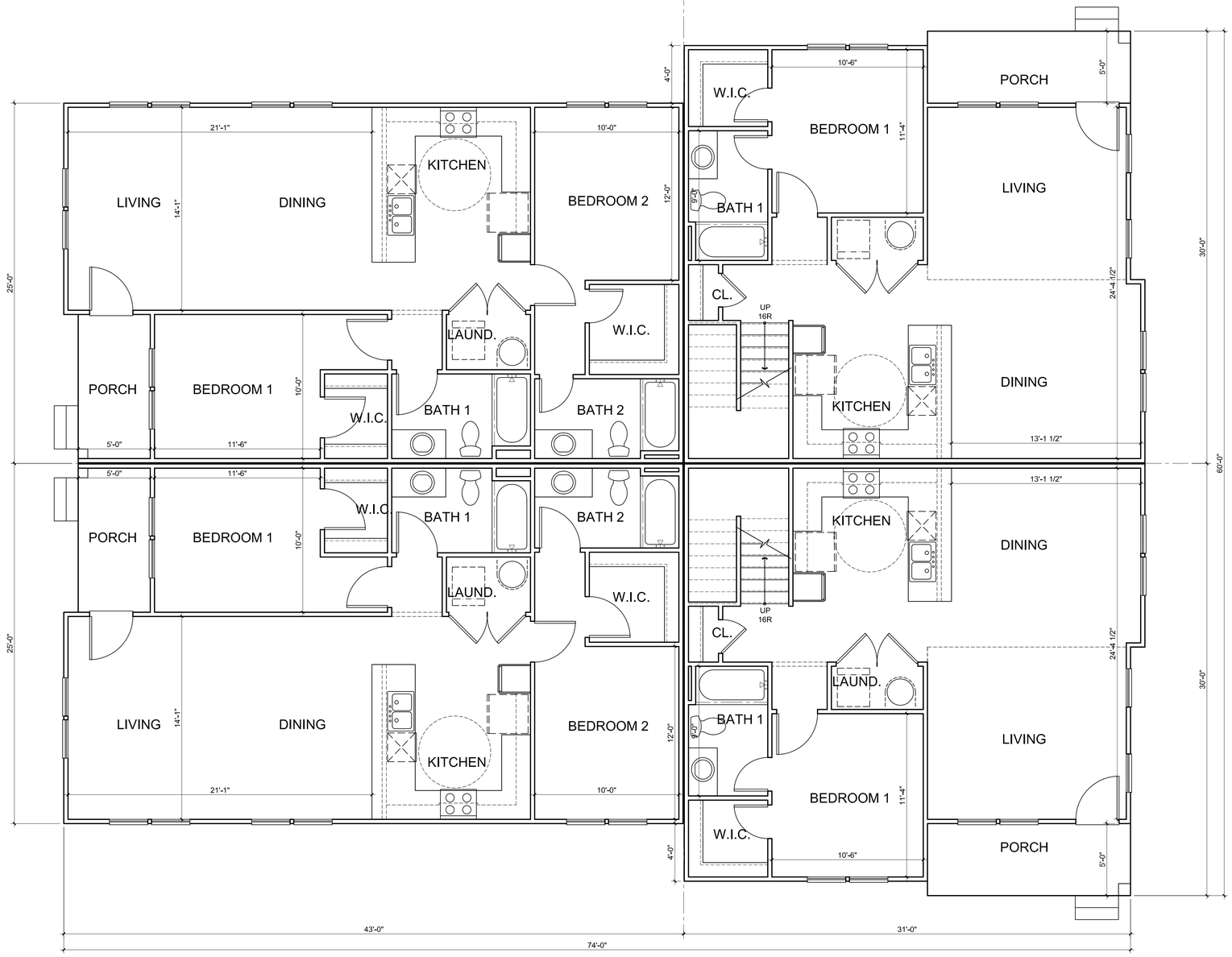

ktgy
ARCHITECTURE+PLANNING

CLIENT:

EdR
COLLEGIATE HOUSING

CONSULTANT:

Consultant Name
Address 1
Address 2
P: ###.###.####
Website

SEAL

STORRS LODGE BUILDING B

CLIENT: EdR

REV	DATE	DESCRIPTION
1	02/26/2016	PRELIMINARY

DESIGN DELIVERABLE: --

ISSUE DATE:

PROJECT NUMBER: **20140673.00**

DRAWN BY: --

CHECKED BY: --

Copyright (c) by KTGY, Inc. All Rights Reserved.

SHEET TITLE:

LOWER LEVEL PLAN

SHEET NUMBER:

A-100

LOWER LEVEL PLAN | SCALE: 1/4"=1'-0" | 1

T:\Single Family\EdR\20140673_Storrs Lodge\00_Building B\Design\Building B Plans.dwg 2/26/2016 4:48:27 PM

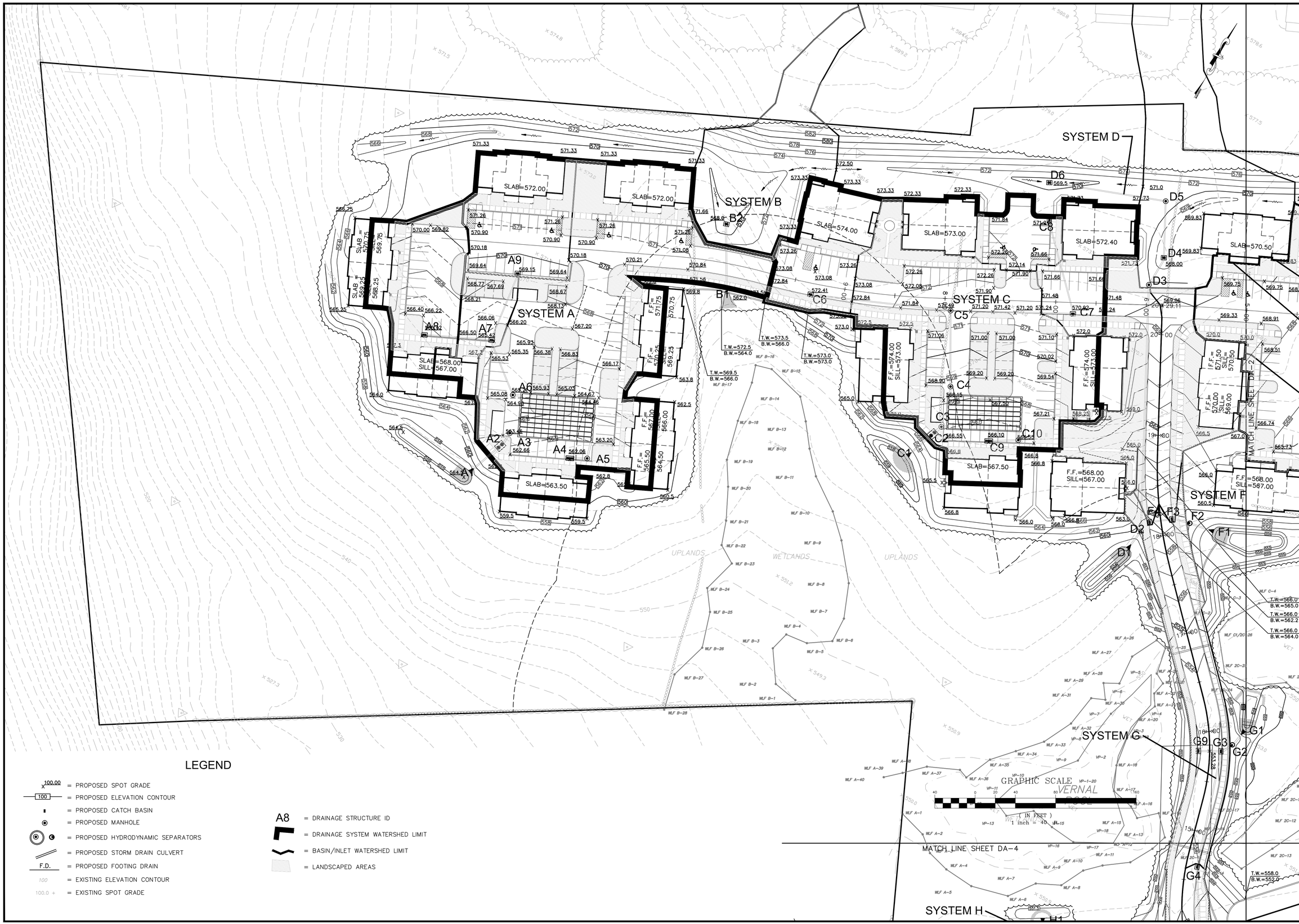

LEGEND

- 100.00 = PROPOSED SPOT GRADE
- 100 = PROPOSED ELEVATION CONTOUR
- = PROPOSED CATCH BASIN
- = PROPOSED MANHOLE
- = PROPOSED HYDRODYNAMIC SEPARATORS
- = PROPOSED STORM DRAIN CULVERT
- F.D. = PROPOSED FOOTING DRAIN
- 100 = EXISTING ELEVATION CONTOUR
- 100.0 + = EXISTING SPOT GRADE
- A8 = DRAINAGE STRUCTURE ID
- = DRAINAGE SYSTEM WATERSHED LIMIT
- = BASIN/INLET WATERSHED LIMIT
- = LANDSCAPED AREAS

F. A. Hesketh & Associates, Inc.
6 Creamery Brook, East Granby, CT 06026
Civil & Traffic Engineers · Surveyors · Planners · Landscape Architects
Phone (860) 653-8000
Fax (860) 844-8600
e-mail mail@fahesketh.com

No.	Date	Description

Revisions:

DRAINAGE AREA MAP
PREPARED FOR
STORRS LODGES, LLC
HUNTING LODGE ROAD
MANSFIELD, CONNECTICUT

Date: 03-24-2016	Drawn by: RJK	Job no: 04161
Scale: 1" = 40'	Checked by: DSZ	Sheet no: 1 OF 4

DA-1

G:\2004\04161\2016 – January\DDA103.dwg, DA-1, Mar. 29, 2016 – 2:48:40 PM

LEGEND

- 100.00 = PROPOSED SPOT GRADE
- 100 = PROPOSED ELEVATION CONTOUR
- = PROPOSED CATCH BASIN
- = PROPOSED MANHOLE
- = PROPOSED HYDRODYNAMIC SEPARATORS
- = PROPOSED STORM DRAIN CULVERT
- F.D. = PROPOSED FOOTING DRAIN
- 100 = EXISTING ELEVATION CONTOUR
- 100.0 + = EXISTING SPOT GRADE
- A8 = DRAINAGE STRUCTURE ID
- = DRAINAGE SYSTEM WATERSHED LIMIT
- = BASIN/INLET WATERSHED LIMIT
- = LANDSCAPED AREAS

SYSTEM E

SYSTEM F

MATCH LINE SHEET GR-7

HUNTING LODGE ROAD

GRAPHIC SCALE

(IN FEET)
1 inch = 40 ft.

F.A. Hesketh & Associates, Inc.
6 Creamery Brook, East Granby, CT 06026
Civil & Traffic Engineers · Surveyors · Planners · Landscape Architects
Phone (860) 653-8000
Fax (860) 844-8600
e-mail mail@fahesketh.com

Revisions:

No.	Date	Description

DRAINAGE AREA MAP
PREPARED FOR
STORRS LODGES, LLC
HUNTING LODGE ROAD
MANSFIELD, CONNECTICUT

Date: 03-24-2016 | Drawn by: RJK | Job no: 04161
Scale: 1" = 40' | Checked by: DSZ | Sheet no: 2 OF 4

DA-2

G:\2004\04161\2016 - January\LODDA103.dwg, DA-2, Mar 29, 2016 - 2:50:23 PM

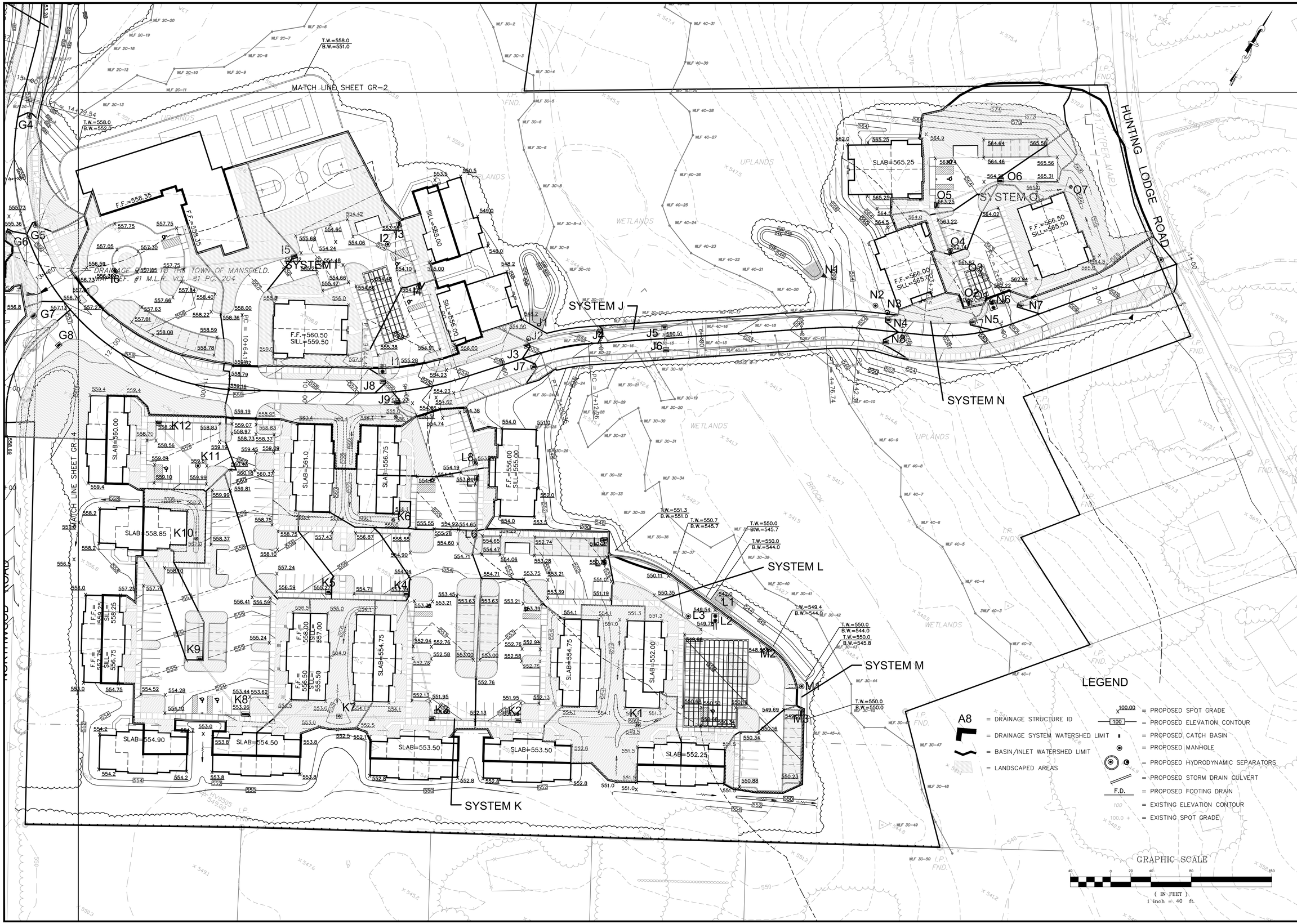

F. A. Hesketh & Associates, Inc.
6 Creamery Brook, East Granby, CT 06026
Civil & Traffic Engineers · Surveyors · Planners · Landscape Architects
Phone (860) 653-8000
Fax (860) 844-8600
e-mail mail@fahesketh.com

Revisions:

No.	Date	Description

DRAINAGE AREA MAP
PREPARED FOR
STORRS LODGES, LLC
HUNTING LODGE ROAD
MANSFIELD, CONNECTICUT

Date: 03-24-2016 | Drawn by: RJK | Job no: 04161
Scale: 1" = 40' | Checked by: DSZ | Sheet no: 3 OF 4

DA-3

Q:\2004\04161\2016 - January\LODDA103.dwg, DA-3, Mar. 29, 2016 - 2:51:41 PM

LEGEND

- 100.00 = PROPOSED SPOT GRADE
- 100 = PROPOSED ELEVATION CONTOUR
- = PROPOSED CATCH BASIN
- = PROPOSED MANHOLE
- = PROPOSED HYDRODYNAMIC SEPARATORS
- = PROPOSED STORM DRAIN CULVERT
- F.D. = PROPOSED FOOTING DRAIN
- 100 = EXISTING ELEVATION CONTOUR
- 100.0 + = EXISTING SPOT GRADE
- A8 = DRAINAGE STRUCTURE ID
- = DRAINAGE SYSTEM WATERSHED LIMIT
- = BASIN/INLET WATERSHED LIMIT
- = LANDSCAPED AREAS

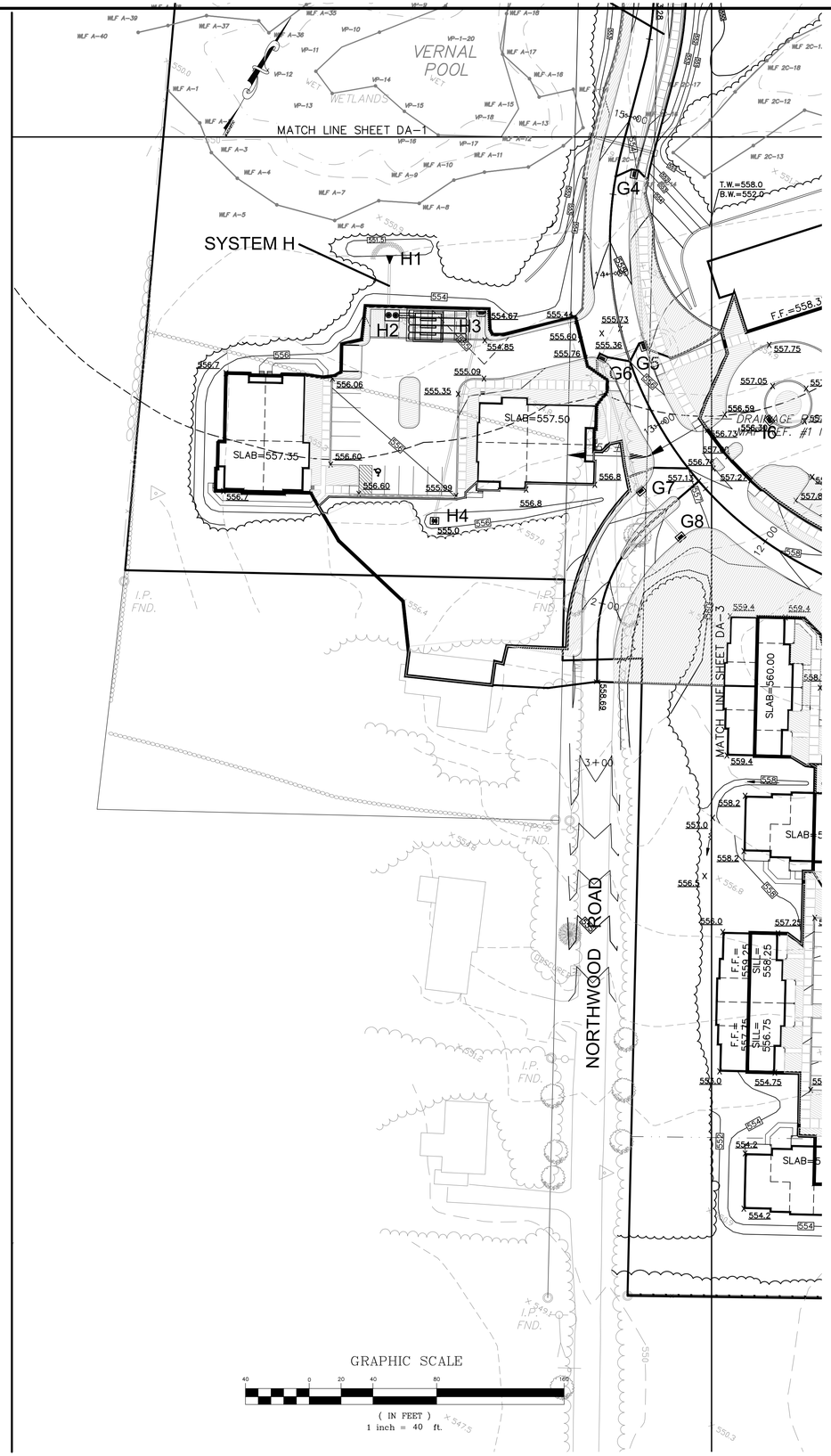

F. A. Hesketh & Associates, Inc.
6 Creamery Brook, East Granby, CT 06026
Civil & Traffic Engineers · Surveyors · Planners · Landscape Architects
Phone (860) 653-8000
Fax (860) 844-8600
e-mail mail@fahesketh.com

No.	Date	Description

Revisions:

DRAINAGE AREA MAP
PREPARED FOR
STORRS LODGES, CT
HUNTING LODGE ROAD
MANSFIELD, CONNECTICUT

Date: 03-24-2016	Drawn by: RJK	Job no: 04161	
Scale: 1" = 40'	Checked by: DSZ	Sheet no: 4 OF 4	

DA-4

Q:\2004\04161\2016 – January\ODDA103.dwg, DA-4, Mar. 29, 2016 – 2:53:13 PM