ARCHITECTURAL ABBREVIATIONS

A

ABV.	ABOVE
A.F.F.	ABOVE FINISH FLOOR
A.D.	ACCESS DOOR
AC.BD.	ACOUSTICAL BOARD
AC.CLG.	ACOUSTICAL CEILING
C.T.	ACOUSYICAL TILE
ADJ.	ADJUSTIBLE
AG.	AGGREGATE
ALT.	ALTERNATIVE
AL.	ALUMINUM
ANCH.	ANCHOR
A.B.	ANCHOR BOLT
ANOD.	ANODIZED
ARCH.	ARCHITECT ARCHITECTURAL
ASPH.	ASPHALT
ASSY.	ASSEMBLY

B

BSMT.	BASEMENT
BM.	BEAM
B.M.	BENCH MARK
BTWN.	BETWEEN
BIT.	BITUMINOUS
BLK.	BLOCK
BK.	BRICK
BLDG.	BUILDING
B.U.R.	BUILT UP ROOFING

C

CAB.	CABINET
CPT.	CARPET
C.I.P.	CAST-IN-PLACE
C.I.	CAST-IRON
CLG.	CEILING
CEM.	CEMENT
CTR.	CENTER
C.L.	CENTER LINE
CER.	CERAMIC
C.T.	CERAMIC TILE
CLO.	COLUMN
COL.	CLOSET
CONC.	CONCRETE
C.M.U.	CONCRETE MASONRY UNIT
CONST.	CONSTRUCTION
CSK.	COUNTERSUNK
CU.FT.	CUBIC FEET

D

DP.	DAMPROOFING
DET.	DETAIL
DIA.	DIAMETER
DIM.	DIMENSION
DR.	DOOR
DN.	DOWN
DWG.	DRAWING
D.F.	DRINKING FOUNTAIN
D.W.	DRYWALL
D.	DEPTH

E

EA.	EACH
ELAS.	ELASTIC
E.D.F.	ELECTRONIC DRINKING FOUNTAIN
EL.	ELEVATION
ELEV.	ELEVATOR
ENCL.	ENCLOSURE
EQ.	EQUAL
EQUIP.	EQUIPMENT
EXH.	EXHAUST
EXIST.	EXISTING
EXP.	EXPANSION
EXP.ANCH.	EXPANSION ANCHOR
EXP.BLT.	EXPANSION BOLT
EXP.JT.	EXPANSION JOINT
EXT.	EXTERIOR

F

FAB.	FABRICATE
FAS.	FASTEN
F.GL.	FIBER GLASS
FIN.	FINISH
F.F.	FINISHED FLOOR
F.E.	FIRE EXTINGUISHER
F.E.C.	FIRE EXTINGUISHER CABINET
F.H.C.	FIRE CABINET
F.H.R.	FIRE HOSE RACK
FRPF.	FIRE PROOFING
FLG.	FLASHING
F.H.R.	FLAT HEAD SCREW
FLR.	FLOOR
F.D.	FLOOR DRAIN
FL.MTD.	FLOOR MOUNTED
FT.	FOOT
FDN.	FOUNDATION
FUT.	FUTURE
F.R.P.	FIBERGLASS REINFORCED PANEL

G

GAL.	GAL.
GALV.	GALVANIZED
GA.	GAUGE
GL.	GLASS
GR.	GRADE
G.B.	GRAB BAR
GND.	GROUND
GRAN.	GRANITE
GYP.BD.	GYPSUM BOARD
GYP.PLAS.	GYPSUM PLSTER

H

HDW.	HARDWARE
HD.	HEAD
HT.	HEIGHT
H.PT.	HIGH POINT
H.C.	HOLLOW CORE
HORIZ.	HORIZONTAL
H.M.	HOLLOW METAL
H.B.	HOSE BIB
HR.	HOUR

I

IN.	INCH
INCL.	INCLUDE
INSUL.	INSULATION
INT.	INTERIOR
I.D.	INSIDE DIAMETER
INTG.	INTEGRAL

J

JT.	JOINT
JAN.	JANITOR
JST.	JOIST

K

KIT.	KITCHEN
KPL	KICKPLATE
KO.	KNOCKOUT
KW.	KILOWATT

L

LAB.	LABORATORY
LBL	LABEL
L.B.	LAG BOLT
LAV.	LAVATORY
LKR.	LOCKER
LT.	LIGHT
LAM.	LAMINATE
LT.WT.	LIGHT WEIGHT
L.W.C.	LIGHT WEIGHT CONCRETE
LMS.	LIMESTONE
L.F.	LINEAR FEET
LNTL.	LINTEL
LG.	LONG
LVR.	LOUVER
L.PT.	LOW POINT
L.	LENGTH

M

MFR.	MANUFACTURER
MRB.	MARBLE
MAS.	MASONRY
M.O.	MASONRY OPENING
M.C.	MEDICINE CABINET
MECH.	MECHANICAL
MEMB.	MEMBRANE
MTL.	METAL
MTL.DK.	METAL DECK
MTL L.	METAL LATH
M.	METER
MEZZ.	MEZZANINE
MM.	MILLIMETER
MH.	MANHOLE
MIR.	MIRROR
MLWK.	MILLWORK
MTD.	MOUNTED
MIN.	MINIMUM
MISC.	MISCELLNEOUS
MOD.	MODULE
MTG.	MOUNTING
MUL.	MULLION

N

N.	NORTH
NAT.	NATURAL
NOM.	NOMINAL
N.I.C.	NOT IN CONTRACT
N.T.S.	NOT TO SCALE
NO.	NUMBER

O

O.A.	OVERALL
OBS.	OBSCURE
O.C.	ON CENTER
OPP.	OPPOSITE
OP.HD.	OPPSITE HAND
O.D.	OUTSIDE DIAMETER
OVHD.	OVERHEAD
OFF.	OFFICE
OZ.	OUNCE
OXY.	OXYGEN

P

PTD.	PAINTED
PR.	PAIR
PNT.	PAINT
PNL.	PANEL
P.T.D.	PAPER TOWEL DISPENSER
P.T.D./R.	PAPER TOWEL DISPENSER WITH RECEPTACLE
P.T.R.	PAPER TOWEL RECEPTACLE
PBD.	PARTICAL BOARD
PART.	PARTITION
PC.	PIECE
PLAS.	PLASTER
PL.	PLASTIC
PL.LAM.	PLASTIC LAMINATE
PLT.	PLATE
P.W.	PLYWOOD
PT.	POINT
POL.	POLISHED
LB.	POUND
PVC.	POLYVINYL CHLORIDE
P.C.	PORTLAND CEMENT
PRCST.	PRECAST
PROP.	PROPERTY
P.S.I.	POUND PER SQUARE INCH

Q

QTY.	QUANTITY
Q.T.	QURRY TILE

R

RAB.	RABBET
RAD.	RADIUS
RE.	REFERENCE
REFR.	REFRIGERATOR
REFL.	REFLECTED
REINF.	REINFORCE
RESIL	RESILIENT
REQ.	REQUIRED
RGTR.	REGISTER
R.A.	RETURN AIR
REV.	REVISE
R.O.W.	RIGHT OF WAY
R	RISER
R.D.	ROOF DRAIN
RFG.	ROOFING
RM.	ROOM
R.O.	ROUGH OPENING
RWD.	REDWOOD
R.W.L.	RAIN WATER LEADER
RUB.	RUBBER

S

S.	SOUTH
SAF.GL.	SAFETY GLASS
S.N.D.	SANITARY NAPKIN DISPENSER
SCHED.	SCHEDULE
SLNT.	SEALANT
SMLS.	SEAMLESS
SECT.	SECTION
SEP.	SEPARATE
SERV.	SERVICE
S.S.	SERVICE SINK
SHR.	SHOWER
SH.	SHEET
SIM.	SIMILAR
S.D.	SOAP DISPENSER
S.DR.	STORM DRAIN
STD.	STANDARD
S.C.	SOLID CORE
S.E.R.	SANITARY NAPKIN RECEPTICAL
SPCL.	SPECIAL
SPEC.	SPECIFICATION
SQ.	SQUARE
S.STL.	STAINLESS STEEL
STL.	STEEL
STRUC.	STRUCTURAL
STOR.	STORAGE
SURF.	SURFACE
SUSP.	SUSPEND
SUSP.CLG.	SUSPENDED CEILING
SYM.	SYMMETRICAL

T

TEL.	TELEPHONE
TEMP.	TEMPERED
T.C.	TERRA COTTA
TER.	TERRAZO
THK.	THICKNESS
THD.	THREAD
THRESH.	THRESHOLD
T.ACC.	TOILET ACCESSORY
TRD.	TREAD
T.& G.	TONGUE AND GROOVE
T.P.	TOP OF PAVEMENT
T.P.D.	TOILET PAPER DISPENSER
T.O.C.	TOP OF CURB
T.O.SL	TOP OF SLAB
T.O.STL.	TOP OF STEEL
T.B.	TOWEL BAR
TRAV.	TRAVERTINE
THERMO.	THERMOSTAT
TYP.	TYPICAL
TLT.	TOILET
T.V.	TELEVISION
T.W.	TOP OF WALL

U

U.C.	UNDER CUT
U.L.	UNDERWRITERS LABORATORIES INC.
UR.	URINAL
U.N.O.	UNLESS NOTED OTHERWISE
UNF.	UNFINISHED

V

VAC.	VACUUM
V.B.	VAPOR BARRIER
VAR.	VARIES
VERT.	VERTICAL
V.W.C.	VINYL WALL COVERING
V.C.T.	VINYL COMPOSITION TILE
VNR.	VENEER
VEST.	VESTIBULE

W

W.	WEST
W.T.W.	WALL TO WALL
W.H.	WALL HUNG
W.C.	WATER CLOSET
WP.	WATER PROOFING
WSCT.	WINDOW
WT.	WEIGHT
WDT.	WIDTH
W.I.	WROUGHT IRON
W/O	WITHOUT
W/	WITH

Y

YD.	YARD

OWNER:

HELLENIC SOCIETY "PAIDEIA", INC.

CENTER FOR HELLENIC STUDIES
GREEK THEATER
PAIDEIA CENTER / UCONN CAMPUS

ARCHITECT:

STEPHAN NOUSIOPOULOS
STEVE ECONOMOU

STRUCTURAL ENGINEER:

COSTAS PERDIKAKIS, PE
PAUL TSAKOPOULOS, PE

SITE ENGINEER:

CROSSMAN ENGINEERING, INC.

ARCH. SYMBOL LEGEND

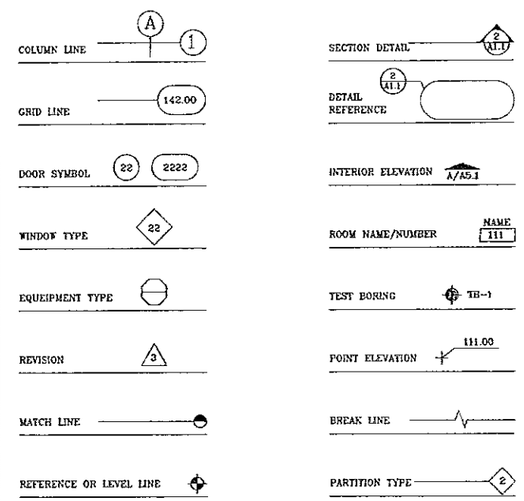

KEY PLAN

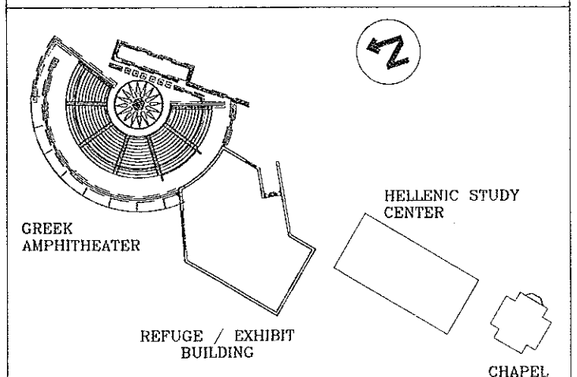

DRAWING INDEX

A R C H I T E C T U R A L

A0.0	ABBREVIATIONS
A0.1	SITE PLAN OVERALL
A0.2	SITE PLAN PROPOSED
LA2.1	LANDSCAPE PLAN
A1.1	REFUGE/EXHIBIT BUILDING - LOWER LEVEL
A1.2	REFUGE/EXHIBIT BUILDING - UPPER LEVEL
A1.3	DETAIL FLOOR PLANS - BATHROOMS
A1.4	PROPOSED BATHROOM ELEVATIONS
A1.5	LOWER & UPPER STAGE
A2.1	STAGE ELEVATIONS
A2.2	ELEVATIONS PROPOSED
A2.3	STAGE ELEVATIONS
A2.4	ELEVATION PROPOSED
A2.5	SECTIONS DETAILS

S T R U C T U R A L

S1.1	FOUNDATION PLAN
S1.2	FRAMING PLAN - UPPER LEVEL
S1.3	FOUNDATION PLAN - STAGE

REVISED: 4/12/2013
REVISED: 3/22/2013
REVISED: 2/18/2013

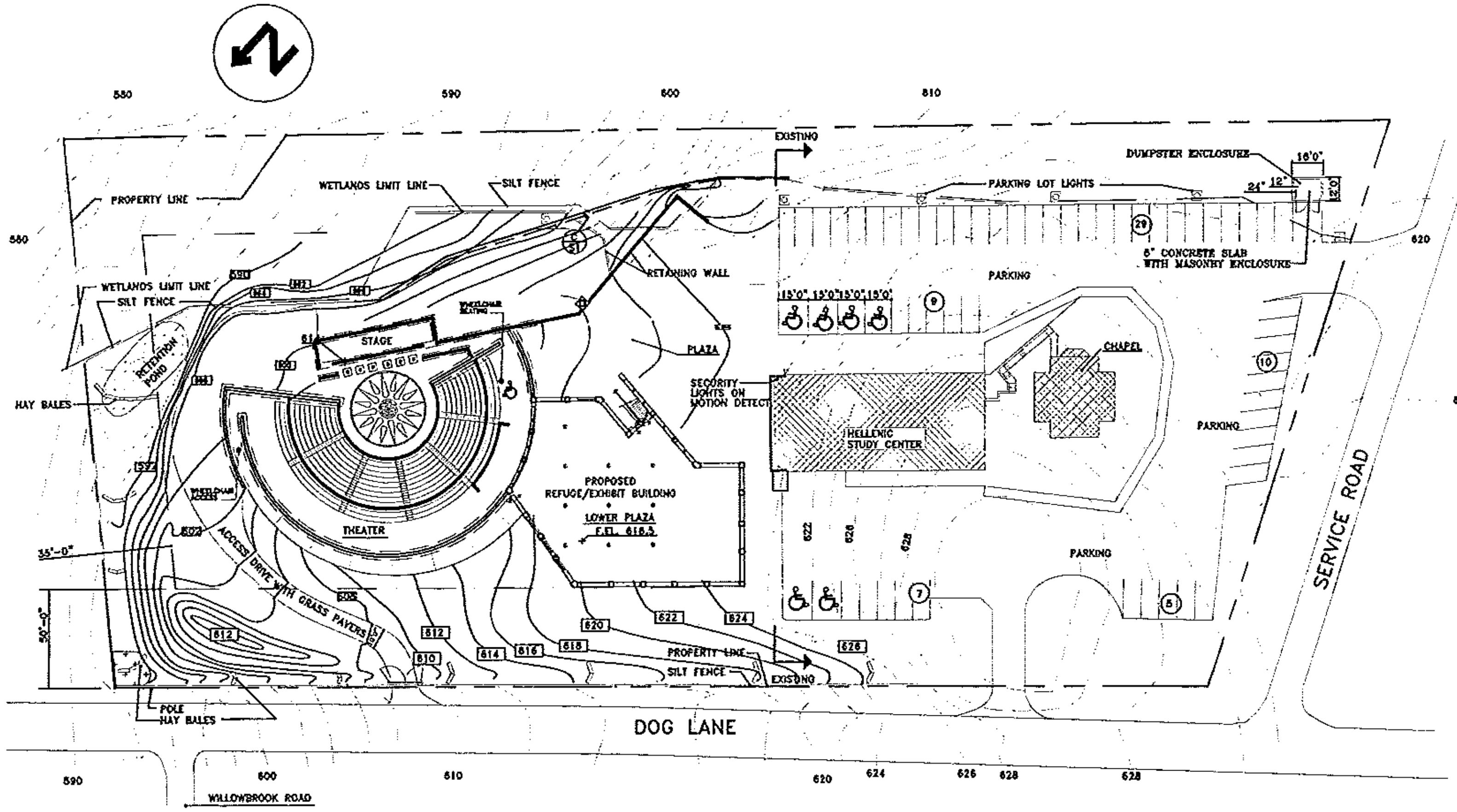

A SITE PLAN

SCALE: 1"= 40'-0"

GENERAL NOTES

1. LAND DISTURBANCE IS TO BE KEPT TO A MINIMUM.
2. RESTABILIZATION SHALL BE SCHEDULED AS SOON AS PRACTICAL.
3. GRADING AREAS TO BE LOAMED AND SEEDED AS SOON AS POSSIBLE AFTER CONSTRUCTION WORK IS COMPLETED.
4. THE EROSION AND SEDIMENT CONTROL MEASURES SHOWN SHALL BE CONSIDERED AS MINIMUM REQUIREMENTS. ADDITIONAL MEASURES MAY BE REQUIRED AT DIRECTION OH THE TOWN STAFF.
5. THE CONTRACTOR SHALL STAKE ALL GRADIDING LIMITS PRIOR TO INITIATING CLEARING ACTIVITIES ON THE SITE.
6. ALL DISTURBED AREAS SHALL BE PROTECTED WITH A MINIMUM VEGETATION COVER
7. ALL CONSTRUCTION TRAFFIC SHALL ENTER AND LEAVE BY THE DESIGNATED ENTRANCE.
8. THE CONTRACTOR SHALL PLAN ALL LAND DISTURBING ACTIVITIES IN A MANNER AS TO MINIMIZE THE EXTENT OF THE DISTURBED AREAS WHILE ALLOWING PROPER DEVELOPMENT OF THE SITE. DURING CONSTRUCTION AS SMALL AN AREA OF SOIL AS POSSIBLE SHOULD BE EXPOSED FOR AS SHORT A TIME AS POSSIBLE.

DESIGNATED ON-SITE AGENT

THE DESIGNATED INDIVIDUAL WHO WILL BE RESPONSIBLE FOR OVERSEEING OF PROPER INSTALLATION AND MAINTENANCE OF ALL SOIL EROSION AND SEDIMENTATION CONTROL MEASURES WILL BE:

ILIAS TOVAZOS PHONE # 860-429-8518

THE ON SITE AGENT SHALL MAINAIN WRITTEN RECORDS OF INSPECTIONS AND ACTIVITIES REGARDING THE S & EC CONTROLS. HE SHALL PROVIDE BI-WEEKLY REPORTS TO THE TOWN'S DESIGNETED AGENT(S)

VEGETATIVE COVER SCHEDULE

ALL DISTURBED AREAS NOT LANDSCAPED SHALL BE LOAMED WITH 4" MINIMUM OF TOPSOIL. SEED AS INDICATED BELOW. CONDITION SOIL WITH FERTILIZER AND LIMESTONE AS INDICATED BY SOIL CONDITIONS.

PERMANENT VEGETATION COVER:
SEEDING DATES: APRIL 1 TO JUNE 1 & SEPTEMBER 1 TO OCTOBER 1
LAWN AREAS:
USE THE FOLLOWING MIXTURE OR EQUAL AS APROVED BY LANDSCAPE ARCHITECT.
KENTUKY BLUEGRASS 45%
CREEPING RED FESCUE 45%
PERENNIAL RYEGRASS 10%
APPLY 1-3 LBS./100 S.F.

TEMPORARY VEGETATIVE COVER:
SEEDING DATES: MARCH 1 TO JUNE 15 & AUGUST 1 TO OCTOBER 1
USE THE FOLLOWING MIXTURE OR EQUAL AS APROVED BY LANDSCAPE ARCHITECT.
ANNUAL RYEGRASS 100%
APPLY 1-3 LBS./100 S.F.

DEVELOPMENT SCHEDULE:

IT IS ANTICIPATED THAT GRADING AND CONSTRUCTION WILL BEGIN WITH CLEARING, GRUBBING AND THE ISTALLATION OF THE HAY BALES AND SILT FENCE, FOLLOWED BY ROUGH GRADING, ALL DRAINAGE STRUCTRURES AND ASSOCIATED PIPING.
THESE PROTECTIVE MEASURES ARE TO REMAIN IN PLACE AND PROPERLY MAINTAINED THROUGHOUT CONSTRUCTION. ALSO AT THIS TIME THE SITE WILL BE PREPARED FOR THE INSTALLATION OF UTILITIES. THESE UTILITIES WILL BE INSTALLED UNDREGROUND AS REQUIRED BY THE APPROPRIATE TOWN AGENCY. FOLLOWING UTILITY INSTALATION, AND FOUNDATION WORK, FINAL GRADING, SEEDING AND PLANTING WILL BE COMPLETED IN AREAS NOT AFFECTED WITH ADITIONAL CONSTRUCTION.

THE FOLLOWING SCHEDULE IS TO SERVE AS A GENERAL GUIDE TO THE SEQUENCE OF CONSTRUCTION ACTIVITIES FOR THE SEDIMENT AND EROSION CONTROL MEASURES. IT IS NOT INTENDED TO TAKE THE PLACE OF THE CONTRACTOR'S RESPONSIBILITY FOR DETAILED SCHEDULE OF ALL CONSTRUCTION ACTIVITIES.
THE DATES GIVEN BELOW ARE APROXIMATE TO GIVE AN INDICATION OF OVERALL CONSTRUCTION SEQUANCE.

CLEARING AND GRADING	FALL 2005
START OF CONSTRUCTION	SPRING 2005
BUILDING / UTILITY CONSTRUCTION	SUMMER 2006
FINAL (INSTALL PAVERS AT PLAZA)	SUMMER 2007
END OF CONSTRUCTION	SUMMER 2007

DEVELOPMENT CONTROL PLAN:

PRIOR TO COMMENCEMENT OF OPERATIONS IN ACCORDANCE WITH ANY PERMIT ISSUED BY THE TOWN OF MANSFIELD PLANNING AND ZONING COMMISION, THE CONTRACTOR SHALL INSTALL ALL EROSION AND SEDIMENT CONTROL MEASURES. PRIOR TO THE COMMENCEMENT OF THE OPERATIONS, THE CONTRACTOR SHALL OBTAIN A SITE INSPECTION FROM THE TOWN OF MANSFIELD ZONING ENFOCEMENT OFFICER TO ENSURE THAT ALL EROSION AND SEDIMENT CONTROL MEASURES HAVE BEEN INSTALLED IN ACCORDANCE WITH THIS NARRATIVE. UPON CERTIFICATION WITH RESPECT TO THE INSTALLATION OF EROSION AND SEDIMENT CONTROL MEASURES, THE CONTRACTOR MAY COMMENCE OPERATIONS PURSSUANT TO THE PERMIT. EROSION AND SEDIMENT CONTROL DEVICES SHALL BE INSTALLED IN ACCORDANCE WITH THE "HAY BARRIER INSTALLATION & MAINTENACE" AND "FILTER BARRIER INSTALLATION & MAINTENANCE" SECTIONS OF THIS NARRATIVE HEREINAFTER CONTAINED.
ALL STRIPPING IS TO BE CONFINED TO THE IMMEDIATE CONSTRUCTION AREA.
TOPSOIL SHALL BE STOCKPILED SO THAT SLOPES DO NOT EXCEED 2 TO 1. A HAYBALE SEDIMENT BARRIER IS TO SURROUND EACH STOCKPILE AND TEMPORARY VEGETATIVE COVER PROVIDED.
DUST CONTROL WILL BE ACCOMPLISED BY SPRAYING WITH WATER AND IF NECESSARY, THE APPLICATION OF CALCIUM CHLORIDE.
THE PROPOSED PLANTING SCHEDULE IS TO BE ADHERED TO DURING THE PLANTING OF DISTURBED AREAS THROUGHOUT THE PROPOSED CONSTRUCTION SITE.
FINAL STABILIZATION OF THE SITE IS TO FOLLOW THE PROCEDURES OUTLINED IN PERMANENT VEGETATION COVER. IF NECESSARY A TEMPORARY VEGETATION COVER IS TO BE PROVIDED UNTIL A PERMANENT COVER CAN BE APPLIED.
DURING THE STABILIZATION PERIOD, ALL EROSION AND SEDIMENT CONTROL MEASURES SHALL BE MAINTAINED IN PROPER WORKING ORDER. THE OWNER SHALL BE RESPONSIBLE FOR CHECKING ALL EROSION AND SEDIMENT CONTROL MEASURES ON A DAILY BASIS DURING THE STABILIZATION PERIOD AND AFTER EACH STORM EVENT. DURING THE STABILIZATION PERIOD WITH RESPECT TO THE SITE, ANY EROSION WHICH OCCURS WITHIN DISTURBED AREAS SHALL BE IMMEDIATELY REPAIRED, RESEEDED AND RESTABILIZED.
ONCE STABILIZATION HAS BEEN COMPLETED AND CERTIFICATION THEREOF OBTAINED IN WRITING FROM THE ZONING ENFORCEMENT OFFICER OF THE TOWN OF MANSFIELD EROSION AND SEDIMENT CONTROL MEASURES SHALL BE REMOVED BE THE COTRACTOR/OWNER.
PROPOSED TREES WILL BE PLANTED WITH THE FOLLOWING PRECAUTIONS.
1. TREES AND SHRUBS ARE TO BE PLANTED IN THE SPRING.
2. NEWLY PLANTED TREES ARE TO BE STAKED AND SUPPORTED WITH GUY WIRE.
3. SOIL AROUND TREES AND SHRUBS IS TO BE THOUGHROUGHLY WATERD WHEN DRY AND MULCH PROVIDED AROUND THE BASE TO PREVENT ROOTS FROM DRYING OUT. PROVIDE A DEPRESSION AT THE BASE OF ALL TREES AND SHRUBS TO INSURE THE WATER WILL BE RECEIVED.

HAY BALE INSTALLATION & MAINTENANCE:

1. BALES SHALL BE SECURELY ANCHORED WITH AT LEAST 2 STAKES AND GAPS BETWEEN BALES SHALL BE WEDGED WITH STRAW TO PROVENT WATER FROM PASSING BETWEEN THE BALES.
2. INSPECT BALES AFTER EACH STORM REPAIR OR REPLACE PROMPTLY AS NEEDED. REMOVE SEDIMENT BEHIND THE BALES WHEN IT HAS REACHED HALF THE HEIGHT OF THE BALE AND DEPOSIT IN AN AREA WHICH IS NOT REGULATED BY THE WETLANDS COMMISSION.
3. INSPECTIONS AND NECESSARY REPAIRS WILL BE MADE DAILY.

FILTER BARRIER INSTALLATION & MAINTENANCE:

1. DIG A 6" TRENCH ON THE UPHILL SIDE OF THE BARRIER LOCATION.
2. POSITION THE POSTS ON THE DOWNHILL SIDE OF THE BARRIER AND DRIVE THE POST 1.5 FEET INTO THE GROUND.
3. LAY THE BOTTOM 6" OF FABRIC IN THE TRENCH TO PREVENT UNDERMINING AND BACKFILL.
4. INSPECT AND REPAIR BARRIER AFTER HEAVY RAINFALL.
5. SEDIMENT DEPOSITS ARE TO BE REMOVED WHEN THEY REACH A HEIGHT OF ONE FOOT BEHIND THE BARRIER AND ARE TO BE DEPOSITED IN AN AREA WHICH IS NOT REGULATED BY THE INLAND WETLANDS COMMOSSION.
6. INSPECTIONS AND NECESSARY REPAIRS WILL BE MADE TWICE WEEKLY.

ZONING INFORMATION

	REQUIRED	PROVIDED
EXISTING ZONE	PAR-90	———
LOT AREA	90,000 S.F.	172,626 S.F.
BUILT UP AREA (EXIST.)	———	12,600 S.F.
BUILT UP AREA PROPOSED	———	19,600 S.F.
AMPHITHEATER	———	(11,000 S.F.)
AREA OF REFUGE/EXHIBIT SPACE	———	8,600 S.F.
TOTAL BUILT UP AREA	———	32,200 S.F.
MAXIMUM HEIGHT	35'-0"	15'-6"
YARDS: FRONT	60'-0"	50'-0" *
SIDE	35'-0"	91'-0"
REAR	50'-0"	50'-0"
PARKING	———	60 SPACES

ACCESS STREET: DOG LANE / SERVICE ROAD

	TOWN	STATE	PRIVATE
SEWAGE DISPOSAL			
WATER – DOMESTIC			
OTHER			
STORM DRAINAGE			

BUILDING / STRUCTURE INFORMATION

TWO STORY CONCRETE AND MASONRY CLASSICAL GREEK

USE GROUP A-5, A-3

TYPE OF CONSTUCTION 2-C

* A VARIANCE WAS ISSUED FOR THE 50'-0" SETBACK

LEGEND:

(cross-hatched)	EXISTING STRUCTURES
618	PROPOSED COUNTOURS
620	EXISTING COUNTOURS
F.EL. 628	NEW OR REQUIRED POINT ELEVATION
	PROPERTY LINE
	SET BACK LINE

NOTES:

SITE INFORMATION INCLUDING TOPOGRAPHY AND PROPERTY LINES AND LOCATION OF EXISTING BUILDINGS WERE TAKEN FROM DRAWINGS PREPERED BY MEEHAN ASSOCIATES CONSULTING ENGINEERS-SURVEYORS, P.C. 387 NORTH MAIN ST. MANCHESTER, CT. 06040 DRAWINGS TITLED "THE HELLENIC SOCIETY PAIDEIA, INC." FILE #89080 AND DATED: 8/31/1989, 3/27/1990, AND 5/29/1990.

PROPOSED ELEVATIONS OF NEW STRUCTURES ARE BASED ON ELEVATION OF LOWER LEVEL OF HELLENIC CENTER AT 617.0' AND SECOND

SEE S2 FOR ADDITIONAL DETAILS AND INFORMATION

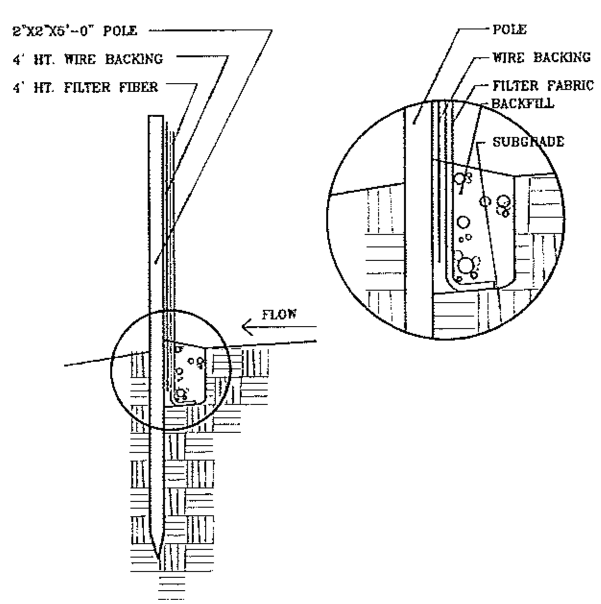

B SILTATION FENCE

NO SCALE

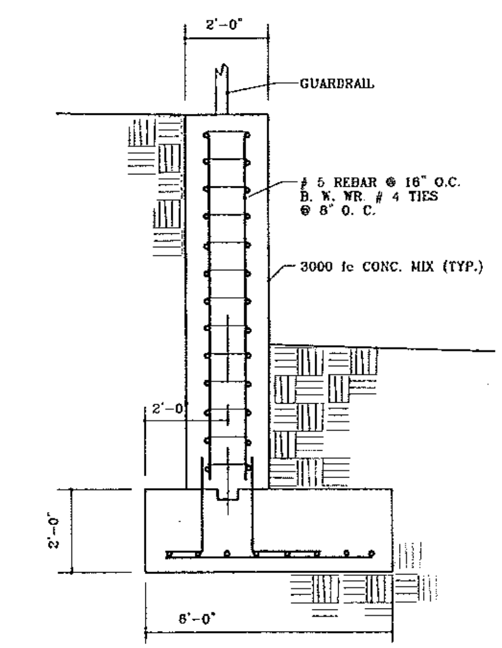

C RETAINING WALL

SCALE: 1/2" = 1'- 0"

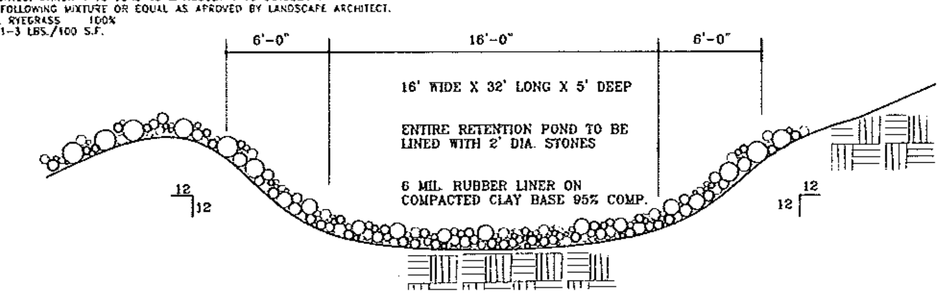

D RETENTION POND DETAIL

NOT TO SCALE

RUN OFF CALULATIONS:

AREA 1 – PROPOSED PAVED AREA S.W. OF STADIUM
ASSUMED @ 90% RUN OFF = 0.562 ACRES.

ARAE 2 – PROPOSED AMPHITHEATER AREA ASSUMED
@ 80% RUN OFF = 0.404 ACRES.

PREDEVELOPMENT: TOTAL ARAE = 0.966 ACRES.
tc = 10 MIN. – R25 = 5.6 MIN / HR = 35% RUNOFF.
Q25 PRED. = 0.966 X 0.35 X 5.6 = 1.89 C.F.S.

POST DEVELOPMENT: 0.562 AC. @ 90% Ic 0.409 AC. @ 80%
tc = 7.5 MIN. – R25 = 6.2 IN / HR.
Q25 POST = 0.562 X 0.90 X 6.2 + 0.404 X 0.80
X 6.2 = 3.13 + 2.00 = 5.13 C.F.S.

INCREASE IN RUNOFF = 5.13 C.F.S. – 1.89 C.F.S. = 3.24 C.F.S.
A= 1/2 (3.24)(300)+1/2(3.24)(600)
= 486C.F.S. 9.72 C.F. = 1,458 C.F.

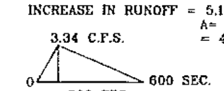

PROP. RETENTION POND 16' X 32' = 512 SQ. FT. 1458C.F./512S.F. = 2.85'
MAKE 3'-0" DEEP

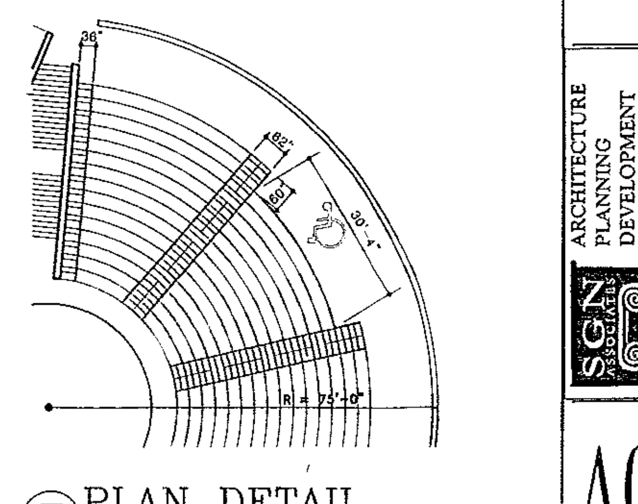

E PLAN DETAIL

SCALE: 1/16" = 1'-0" (HANDICAP SEETING)

REVISIONS

9 / 2 / 2005
02 /18/ 2013
03 /22/ 2013
04 /12/ 2013

CENTER FOR HELLENIC STUDIES
PAIDEIA (UCONN)

DOG LANE
MANSFIELD, CONNECTICUT

OVERALL SITE PLAN

05/26/2008

AS SHOWN

SGN ASSOCIATES
ARCHITECTURE
PLANNING
DEVELOPMENT

Stephan Nousiopoulos, AIA
372 West Main Street • Norwich, CT 06360
Office/Fax 860.204.0512
email: snousiopoulos@snet.net

A0.1

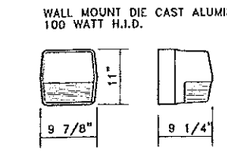

B WALL LIGHT
NO SCALE

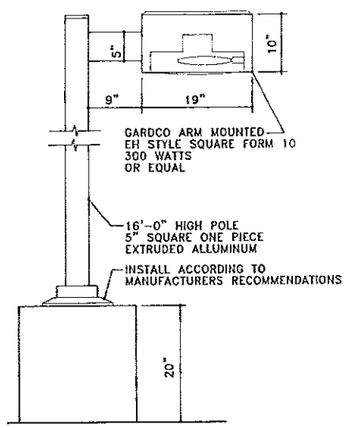

C POLE LIGHT
NO SCALE

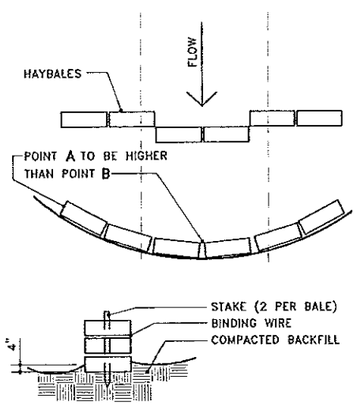

D HAY BALE DETAIL
NO SCALE

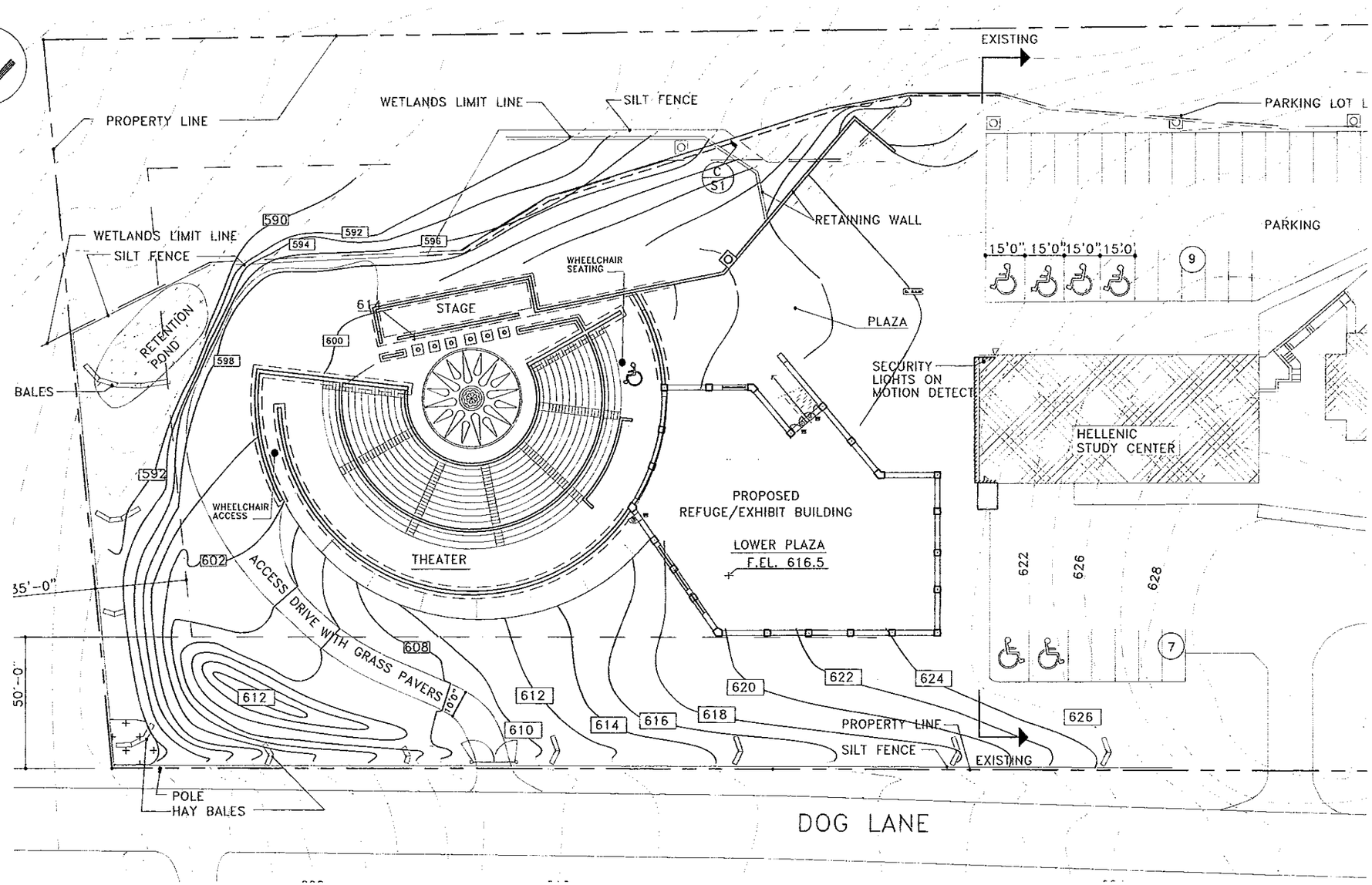

A SITE PLAN
SCALE: 1"= 20'-0"

A.	MCPHIBEN OUTDOOR 946 RECESSED AISLE LIGHT
B.	MCPHIBEN OUTDOOR 104 HALF CYLINDER SCONE
C.	GARBO BOLLARD BR163

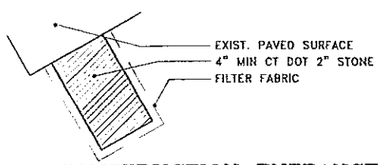

E CONSTRUCTION ENTRANCE
NO SCALE

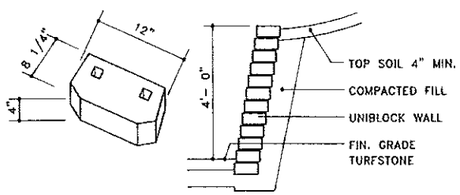

F BLOCK WALL – UNILOCK
NO SCALE

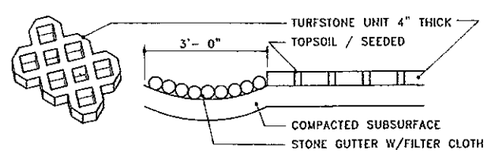

G TURFSTONE – UNILOCK
NO SCALE

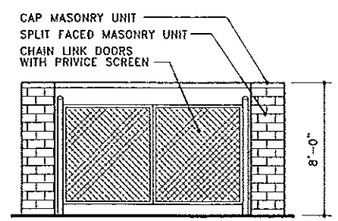

H DUMPSTER ENCLOSURE
SCALE: 1/4"=1'-0"

NOTES:

INCLUDE A SIX-INCH BERM OF TWO-INCH STONE ALONG THE DOWNHILL EDGE OF THE RETENTION POND

PROVIDE EROSION AND SEDIMENTATION CONTROL AS NEEDED AND AS REQUIRED BY MANSFIELD PLANNING AND ZONING

EROSION CONTROL MEASURES TO BE INSPECTED ON A DAILY BASIS, AND A REPORT BE SUBMITED ON A BI-WEEKLY BASIS.

SILT FENCING TO BE INSTALLED AT TH INITIATION OF CLEARING AND GRUBBING

HANDICAP SPACES TO BE SIGNED AND MARKED WITH PERMANENT STRIPING IN ACCORDANCE TO STATE AND LOCAL CODES

REVISIONS

9 / 2 / 2005	04/12/2013
12/ 12/ 2009	
04/ 01/ 2010	
02/ 18/ 2013	
03/ 22/ 2013	

CENTER FOR HELLENIC STUDIES
PAIDEIA (UCONN)
DOG LANE
MANSFIELD, CONNECTICUT

SITE PLAN
PROPOSED
AS SHOWN
05/26/2008

ARCHITECTURE
PLANNING
DEVELOPMENT

Stephan Nousiopoulos, AIA
372 West Main Street • Norwich, CT 06360
Office/Fax 860.334.0912
email: nousiopoulos@snc.net

SCN ASSOCIATES

A0.2

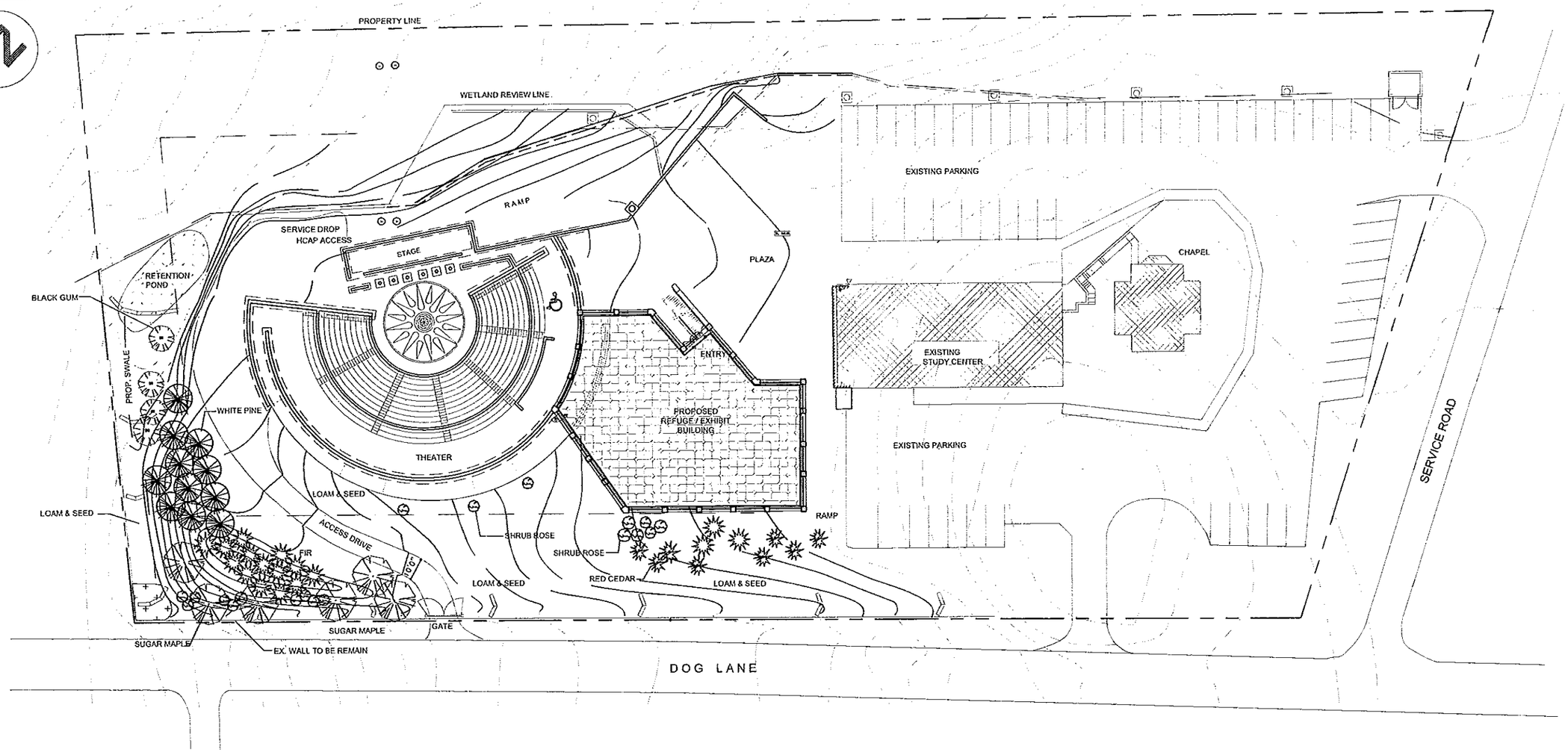

A LANDSCAPE PLAN

SCALE: 1" = 10'-0"

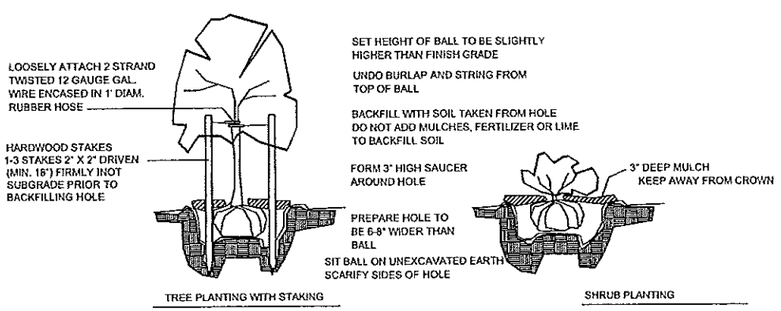

PLANTING DETAILS - NOT TO SCALE

PLANTING SPECIFICATIONS

Symbol	Code	Name/ Scientific Name	Quantity	Size
		SUGAR MAPLE/ ACER SACCHARUM	5	2 - 2 1/2" CALIPER
		BLACK GUM/ NYSSA SYLVATICA	4	2 - 2 1/2" CALIPER
		RED CEDAR/ JUNIPERUS VIRGINIANA	8	4-5'
		WHITE PINE/ PINUS STROBUS	11	4-5'
		CARMINE CRAB/ MALUS X ATROSANGUINEA	-	2 - 2 1/2" CALIPER
		FRASER FIR/ ABIES FRASERI	16	5 - 6'
		SHRUB ROSES/ ROSA SPP.	18	24"-36"
		PURPLELEAF WINTERCREEPER/ EUONYMUS FORTUNEI COLORATUS	178	5 PT. 3' SPACING STAGGERED

GRASS SEED MIX: 75 % FESCUE, 25% KENTUCKY BLUEGRASS

REVISIONS

9 / 2 /	2005
12 / 12 /	2009
02 / 18 /	2013
03 / 22 /	2013
04 / 12 /	2013

CENTER FOR HELLENIC STUDIES
PAIDEIA (UCONN)
DOG LANE
MANSFIELD, CONNECTICUT

LANDSCAPE PLAN
JOHN ALEXOPOULOS
LANDSCAPE ARCHITECT

AS SHOWN | 05/26/2008

ARCHITECTURE
PLANNING
DEVELOPMENT
SGN ASSOCIATES
Stephan Nassiopoulos, AIA
372 West Main Street • Norwich, CT 06360
Office/Fax: 860.889.4042
e-mail: sgnassociates@snet.net

LA2.1

N O T E S : TILE FLOOR FINISHES

1. SUBMIT ONE SAMPLE PANEL APPROXIMATELY 12" SQUARE FOR EACH TILE COLOR, PATTERN INTENDED TO BE USED
2. DELIVER ALL PRODUCTS TO JOB SITE IN MANUFACTURER'S UNOPENED CONTAINERS.
3. MAINTAIN TEMPERATURE AT 50F MINIMUN DURING TILEWORK AND FOR 7 DAYS AFTER COMPLETION
4. DETERMINE LOCATIONS OF ALL MOVEMENT JOINTS BEFORE STRARTING TILEWORK
5. DETERMINE LOCATIONS OF ALL ACCESSORIES BEFORE STARTING TILEWORK
6. LAYOUT ALL TILEWORK SO AS TO MINIMIZE CUTS LESS THAN ONE-HALF TILE IN SIZE
7. LOCATE TILE CUTS BOTH WALLS AND FLOORS SO AS TO BE LEAST CONSPICUOUS
8. ALIGN ALL WALL JOINTS TO GIVE STRAIGHT UNIFORM GROUT LINES. PLUMB AND LEVEL
9. ALIGN ALL FLOOR JOINTS TO GIVE STRAIGHT UNIFORM GROUT, PARALLEL WITH WALLS
10. SUPPLY FIRST-CLASS WORKMANSHIP IN ALL TILEWORK
11. USE ALL PRODUCTS IN STRICT ACCORDANCE WITH RECOMMENDATIONS AND DIRECTIONS OF MANUFACTURERES
12. PROPORTION ALL MIXES IN ACCORDANCE WITH LATEST ANSI STANDARD SPECIFICATIONS
13. FOLLOW GROUT MANUFACTURE'S RECOMMENDATIONS AS TO GROUTING PROCEDURES AND PRECAUTIONS. USE COLOR WHITE FOR GROUT
14. USE AMERICAN OLEAN COMMERCIAL PRODUCTS

GENERAL NOTES – ADMINISTRATION

ALL CONSTRUCTION SHALL CONFORM TO APPLICABLE PORTIONS OF THE CONNECTICUT BASIC BUILDING CODE

THE CONTRACTOR SHALL BE RESPONSIBLE FOR THE SAFE MAINTENANCE OF THE BUILDING AND ITS FACILITIES DURING CONSTRUCTION.

ALL MATERIALS, ASSEMBLIES, FORMS AND METHODS OF CONSTRUCTION AND SERVICE EQUIPMENT SHALL MEET THE FOLLOWING REQUIREMENTS:

IT SHALL HAVE BEEN ACCEPTABLE PRIOR TO THE EFFECTIVE DATE OF THE CODE BY THE BOARD, OR,

SHALL HAVE BEEN ACCEPTED FOR USE UNDER THE PRTESCRIBED CODE TEST METHODS BY THE BUILDING DEPARTMENT.

AT LEAST 24-HOUR WRITTEN NOTICE SHALL BE GIVEN TO THE BUILDING DEPARTMENT BEFORE COMMENMCEMENT OF WORK.

ALL NOTES MENTION HEREIN WITH THOSE ON THE VARIOUS DRAWINGS SHALL APPLY TO ALL DRAWINGS AND FORM PART OF THE CONTRACT.

EACH CONTRACTOR WILL BE HELD STRICKTLY RESPONSIBLE FOR HIS WORK. ANY DISCREPANCIES IN THE PLANS OR DETAOLS SHALL BE CALLED TO THE ATTENTION OF THA ARCHITECT.

ALL DIMENTIONS ARE TO BE VERIFIED BEFORE COMMENCEMENT OF WORK BY THE RESPECTIVE CONTRACTORS.

GENERAL NOTES – MEANS OF EGRESS

ALL EXITS SHALL BE KEPT READILY ACCESSIBLE AND UNOBSTRUCTED AT ALL TIMES.

ILLUMINATION OF AT LEAST 5 FOOT-CANDLES MEASURED AT THE FLOOR LEVEL BE MAINTAINED CONTINOUSLY, DURING OCCUPANCY, IN EXITS AND THEIR ACCESS FACILITIES.

EXIT LIGHTING SHALL BE ON CIRCUITS THAT ARE SEPARATE FROM ANY OTHER CIRCUITS, TAKEN OFF AHEAD OF THE MAIN SWITCH.

LOCATION OF EVERY EXIT SHALL BE CLEARLY INDICATED BY THE EXIT SIGNS, PLACED, IF REQUIRED, AT AN ANGLE WITH THE EXIT OPENING. INSTALL DIRECTIONAL SOGNS TO SERVE AS GUIDES FROM ALL PORTIONS OF THE CORRIDOR OR FLOOR. SIGNS SHALL BE ON SEPERATE CIRCUITS, TAKEN OFF AHEAD OF THE MAIN SWITCH.

EXIT SIGNS SHALL BE INTERNALLY LIGHTED, HAVING AN INITIAL BRIGHTNESS OF THE LETTERS OF AT LEAST 25 FEET-LAMBERTS. LETTERS SHALL BE RED, THE BACKGROUND SHALL BE WHITE. LETTERS SHALL BE BLOCK LETTERING, AT LEAST, WITH 9/16" STROKES.

PROVIDE "STATEMENT OF SPECIAL INSPECTIONS" AS REQUIRED BY SECTION 1705.1 OF THE CONNECTICUT SUPPLEMENT.

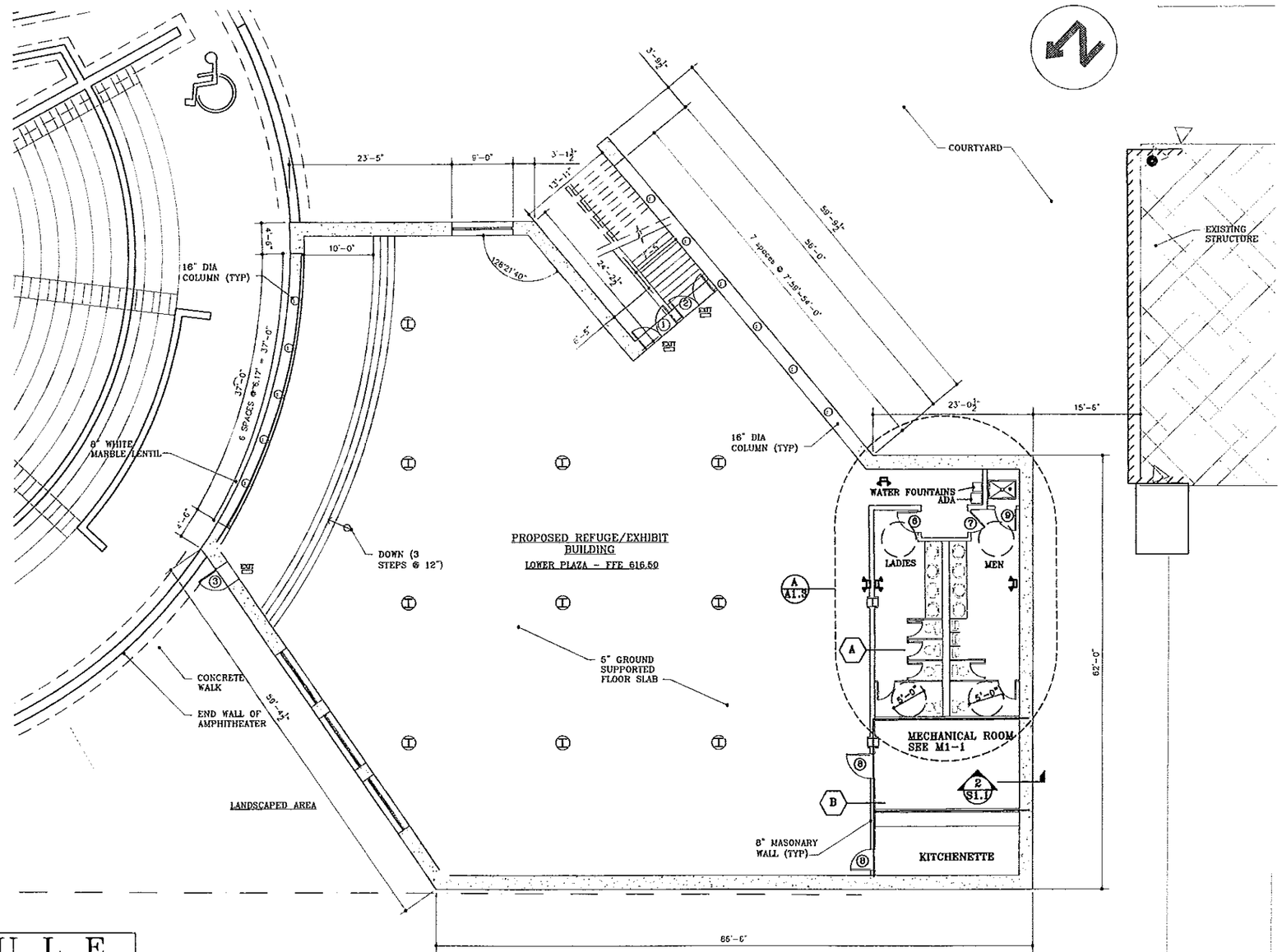

(A) LOWER FLOOR PLAN

SCALE: 1/8" = 1'-0"

D O O R S C H E D U L E

PANIC EXIT DEVICES TO BE BY CORBIN RUSSWIN ED8000 SERIES PUSHPAD EXIT DEVICES

NO	SIZE	DOOR	FRAME	THRESH	DR TYPE	FR TYPE	REMARKS	PASSAGE SET	KEY IN SET	PRIVACY SET	PANIC BAR	PUSH PULL	WALL BUMPER DOOR STOP	ONE WAY MIRROR GLASS	GARAGE DOOR OPENER	PNEUMATIC DOOR OPENER	DEADBOLT	DOOR CLOSER	WEATHERSTRIP
1	6'3"X7'0"X1-3/4"	GLASS	MTL	MTL					O		O	O						O	O
2	6'3"X7'0"X1-3/4"	GLASS	MTL	MTL					O		O	O						O	O
3	3'6"X7'0"X1-3/4"	MTL	MTL	MTL					O		O							O	O
4	3'0"X7'0"X1-3/4"	GLASS	MTL	MTL					O		O	O						O	O
6	3'0"X7'0"X1-3/4"	GLASS	MTL	MTL								O	O					O	
6	3'0"X7'0"X1-3/4"	WD-SC	MTL	MTL								O	O					O	
7	3'0"X7'0"X1-3/4"	WD-SC	MTL	MTL								O	O					O	
8	3'6"X7'0"X1-3/4"	MTL	MTL	MTL			2 HR	O					O					O	
9	3'0"X7'0"X1-3/4"	MTL	MTL	MTL					O				O						

1

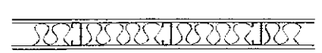

WALL TYPE "A" — (A)

NONBEARING WALL

WALL TYPE "B" — (B)

NONBEARING WALL

WALL ASSEMBLY

5/8" GYPSUM BOARD
4" METAL STUD @ 16" O. C.
4" FRICTION FIT BATT ISULATION
5/8" GYPSUM BOARD

NOTE:

SUBSTITUTE TYPICAL GYPSUM BOARD WITH WATER RESISTANT GYPSUM BOARD @ ALL BATHS AND RESTROOM SIDES

WALL ASSEMBLY

2 LAYERS 5/8" TYPE X GYPSOM BOARD
4" METAL STUD @ 16" O. C.
4" FRICTION FIT BATT ISULATION
2 LAYERS 5/8" TYPE X GYPSOM BOARD

NOTE:

2 HOUR RATING
UL – R1319

REVISIONS	
9 / 2 / 2005	04/12/2013
12 / 2 / 2009	
05 / 10 / 2011	
02 / 18 / 2013	
03 / 22 / 2013	

CENTER FOR HELLENIC STUDIES
PAIDEIA (UCONN)
DOG LANE
MANSFIELD, CONNECTICUT

REFUGE/EXHIBIT BUILDING
LOWER LEVEL

AS SHOWN | 05/26/2008

ARCHITECTURE
PLANNING
DEVELOPMENT
SCN ASSOCIATES
Stephan Nousiopoulos, AIA
372 West Main Street • Norwich, CT 06360
Office/Fax 860.234.2952
email: snassociates@snassociates.net

A1.1

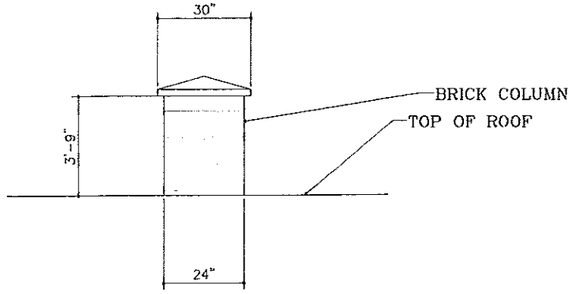

(B) BRICK COLUMN DETAIL

SCALE: NONE

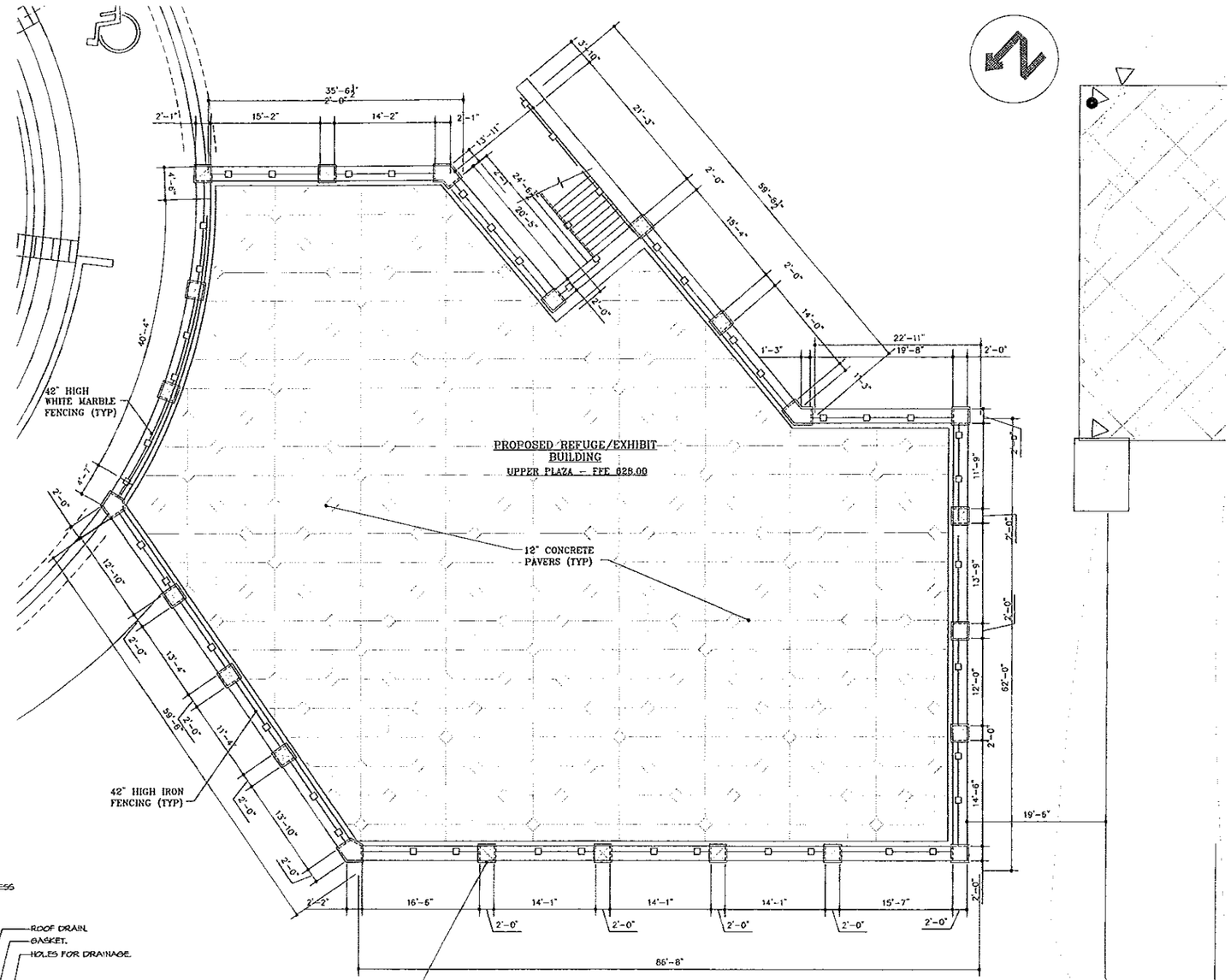

(A) UPPER FLOOR PLAN

SCALE: 1/8" = 1'-0"

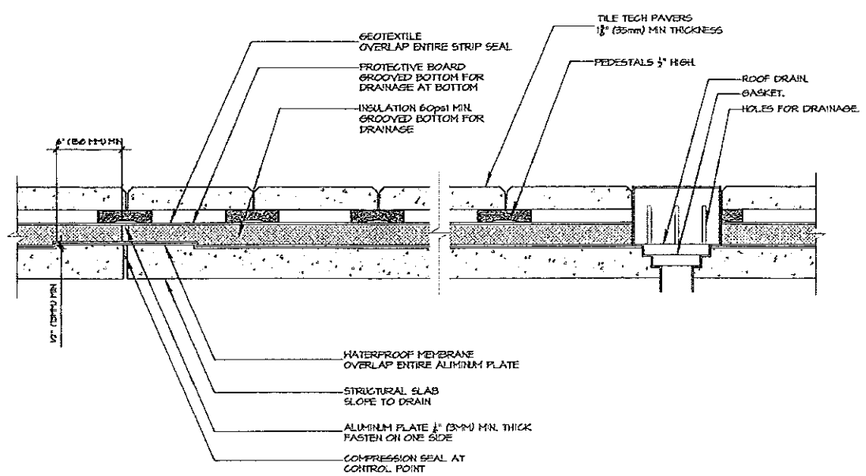

PEDESTAL PAVER SYSTEM ROOF DECK INSTALLATION

REVISIONS

9 / 2 / 2005	04/12/2013
12 / 12 / 2006	
05 / 10 / 2011	
02 / 18 / 2013	
03 / 22 / 2013	

CENTER FOR HELLENIC STUDIES
PAIDEIA (UCONN)
DOG LANE
MANSFIELD, CONNECTICUT

REFUGE/EXHIBIT BUILDING
UPPER LEVEL

AS SHOWN | 05/26/2008

ARCHITECTURE
PLANNING
DEVELOPMENT

Stephan Nousiopoulos, AIA
272 West Main Street - Norwich, CT 06360
Office/Fax 860.334.0472
www.sgnassociates.com

SGN ASSOCIATES

A1.2

N O T E S :

1. SUBMIT ONE SAMPLE PANEL APPROXIMATELY 12" SQUARE FOR EACH TILE COLOR, PATTERN INTENDED TO BE USED
2. DELIVER ALL PRODUCTS TO JOB SITE IN MANUFACTURER'S UNOPENED CONTAINERS.
3. MAINTAIN TEMPERATURE AT 60F MINIMUN DURING TILEWORK AND FOR 7 DAYS AFTER COMPLETION
4. DETERMINE LOCATIONS OF ALL MOVEMENT JOINTS BEFORE STRARTING TILEWORK
5. DETERMINE LOCATIONS OF ALL ACCESSORIES BEFORE STARTING TILEWORK
6. LAYOUT ALL TILEWORK SO AS TO MINIMIZE CUTS LESS THAN ONE-HALF TILE IN SIZE
7. LOCATE TILE CUTS BOTH WALLS AND FLOORS SO AS TO BE LEAST CONSPICUOUS
8. ALIGN ALL WALL JOINTS TO GIVE STRAIGHT UNIFORM GROUT LINES, PLUMB AND LEVEL
9. ALIGN ALL FLOOR JOINTS TO GIVE STRAIGHT UNIFORM GROUT, PARALLEL WITH WALLS
10. SUPPLY FIRST-CLASS WORKMANSHIP IN ALL TILEWORK
11. USE ALL PRODUCTS IN STRICT ACCORDANCE WITH RECOMMENDATIONS AND DIRECTIONS OF MANUFACTURERES
12. PROPORTION ALL MIXES IN ACCORDANCE WITH LATEST ANSI STANDARD SPECIFICATIONS
13. FOLLOW GROUT MANUFACTURE'S RECOMMENDATIONS AS TO GROUTING PROCEDURES AND PRECAUTIONS. USE COLOR WHITE FOR GROUT
14. USE AMERICAN CLEAN COMMERCIAL PRODUCTS

GENERAL NOTES – ADMINISTRATION

ALL CONSTRUCTION SHALL CONFORM TO APPLICABLE PORTIONS OF THE CONNECTICUT BASIC BUILDING CODE

THE CONTRACTOR SHALL BE RESPONSIBLE FOR THE SAFE MAINTENANCE OF THE BUILDING AND ITS FACILITIES DURING CONSTRUCTION.

ALL MATERIALS, ASSEMBLIES, FORMS AND METHODS OF CONSTRUCTION AND SERVICE EQUIPMENT SHALL MEET THE FOLLOWING REQUIREMENTS:

IT SHALL HAVE BEEN ACCEPTABLE PRIOR TO THE EFFECTIVE DATE OF THE CODE BY THE BOARD, OR,

SHALL HAVE BEEN ACCEPTED FOR USE UNDER THE PRESCRIBED CODE TEST METHODS BY THE BUILDING DEPARTMENT.

AT LEAST 24-HOUR WRITTEN NOTICE SHALL BE GIVEN TO THE BUILDING DEPARTMENT BEFORE COMMENCEMENT OF WORK.

ALL NOTES MENTION HEREIN WITH THOSE ON THE VARIOUS DRAWINGS SHALL APPLY TO ALL DRAWINGS AND FORM PART OF THE CONTRACT.

EACH CONTRACTOR WILL BE HELD STRICKTLY RESPONSIBLE FOR HIS WORK. ANY DISCREPANCIES IN THE PLANS OR DETAOLS SHALL BE CALLED TO THE ATTENTION OF THA ARCHITECT.

ALL DIMENTIONS ARE TO BE VERIFIED BEFORE COMMENCEMENT OF WORK BY THE RESPECTIVE CONTRACTORS.

ELECTRICAL NOTES

ALL ELECTRICAL WORK, MATERIALS AND EQUIPMENT SHALL BE IN ACCORDANCE WITH THE NATIONAL ELECTRICAL CODE (LATEST EDITION), LOCAL POWER AUTHORITY REQUIREMENTS AND ALL REQUIREMENTS AS ADOPTED BY THE GOVERNING AGENCY.

ELECTRICAL CONTRACTOR SHALL OBTAIN AND PAY ALL CHARGES FOR NECESSARY PERMITS. ELECTRICAL CONTRACTOR SHALL CONDUCT ALL TEST AND INCEPTION FOR THE INSTALLATION OF THIS WORK AS REQUIRED BY GOVERNING AGENCIES.

ELECTRICAL CONTRACTOR SHALL BE RESPONSIBLE FOR CUTTING ALL HOLES REQUIRED FOR THE ELECTRICAL WORK. ALL HOLES SHALL BE CORE DRILLED OR CUT TO SHAPE NEATLY AND ACCURATELY. ELECTRICAL CONTRACTOR SHALL PATCH ALL HOLES AND SHALL PROVIDE UL APPROVED NON-COMBUSTIBLE SMOKE TIGHT JOINTS AT ALL PENETRATIONS THROUGH FIRE RATED WALLS.

ELECTRICAL CONTRACTOR SHALL COORDINATE ALL WORK AND PENETRATIONS THROUGH WALLS WITH OTHER TRADES TO AVOID CONFLICTS. VERIFY LOCATIONS OF ALL OTHER PIPING, DUCTWORK AND EQUIPMENT PRIOR TO INSTALLING ELECTRICAL EQUIPMENT.

ELECTRICAL CONTRACTOR SHALL ANCHOR ALL CONDUITS, ETC., SECURELY TO PERMANENT STRURE WITH FASTENERS APPROVED BY GOVERNING AGENCY.

PROVIDE EMERGENCY LIGHTING AND EXIT LIGHTS PER FLOOR PLANS.

ALL ELECTRICAL CONDUITS SHALL BE INSTALLED PARALLEL AND PERPENDICULAR TO COLUMN CETERLINES.

INSTALL LIGHTING UNITS TRUE, FREE OF LIGHT LEAKS, WARPS, DENTS, AND OTHER IRREGULARITIES.

CLEAN AND REMOVE ALL SMUDGES, FINGERPRINTS, ETC., FROM LIGHTING FIXTURES, AFTER INSTALLATION.

FINAL ADJUSTMENT OF ALL ADJUSTABLE TYPE LIGHTING FIXTURES AS DIRECTED, UPON COMPLETION OF THE JOB. FINAL ADJUSTMENT OF ACCENT LIGHTING TO BE MADE UNDER ACTUAL LIGHTING CONDITIONS.

ALL DEVICES AND LIGHTING FIXTURES TO BE UL LABELED.

PROVIDE GFCI RECEPTACLES WITH "PUSH-TO-TEST" BUTTON AS REQUIRED.

MOUNTING HEIGHTS INDICATED BELOW ARE GENERAL, REFER TO DRAWINGS FOR SPECIAL CASES.

RECEPTACLES	1'-6" A.F.F.
SWITCHES	4'-0" A.F.F.
TELEPHONE (WALL)	5'-0" A.F.F.
THERMOSTATS	5'-0" A.F.F.

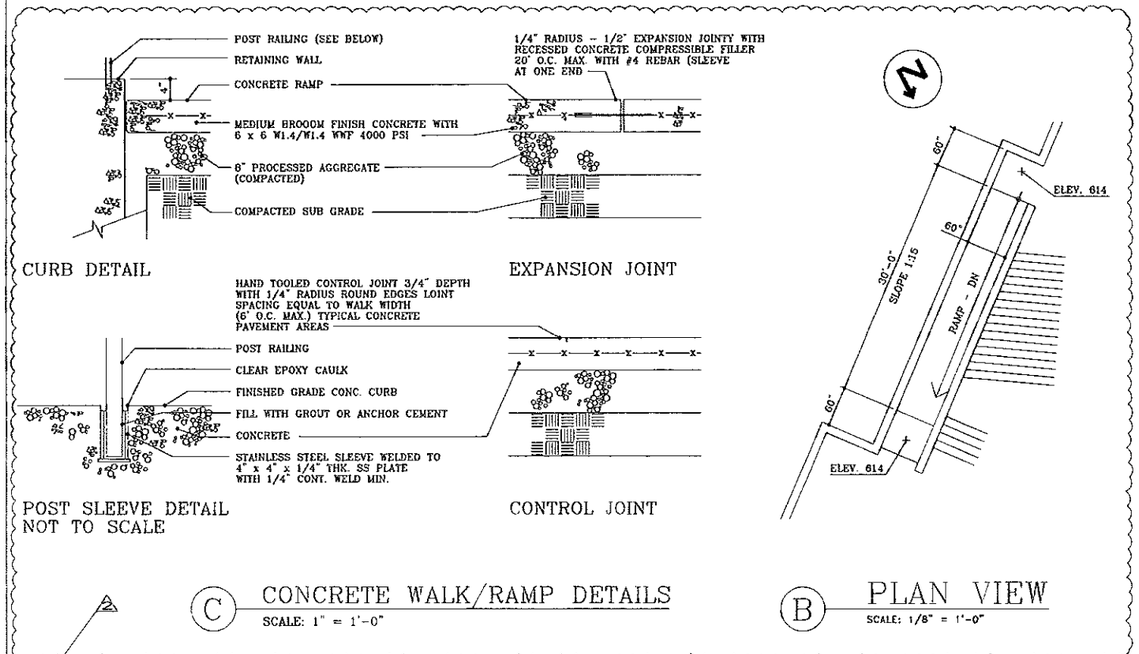

(C) CONCRETE WALK/RAMP DETAILS
SCALE: 1" = 1'-0"

(B) PLAN VIEW
SCALE: 1/8" = 1'-0"

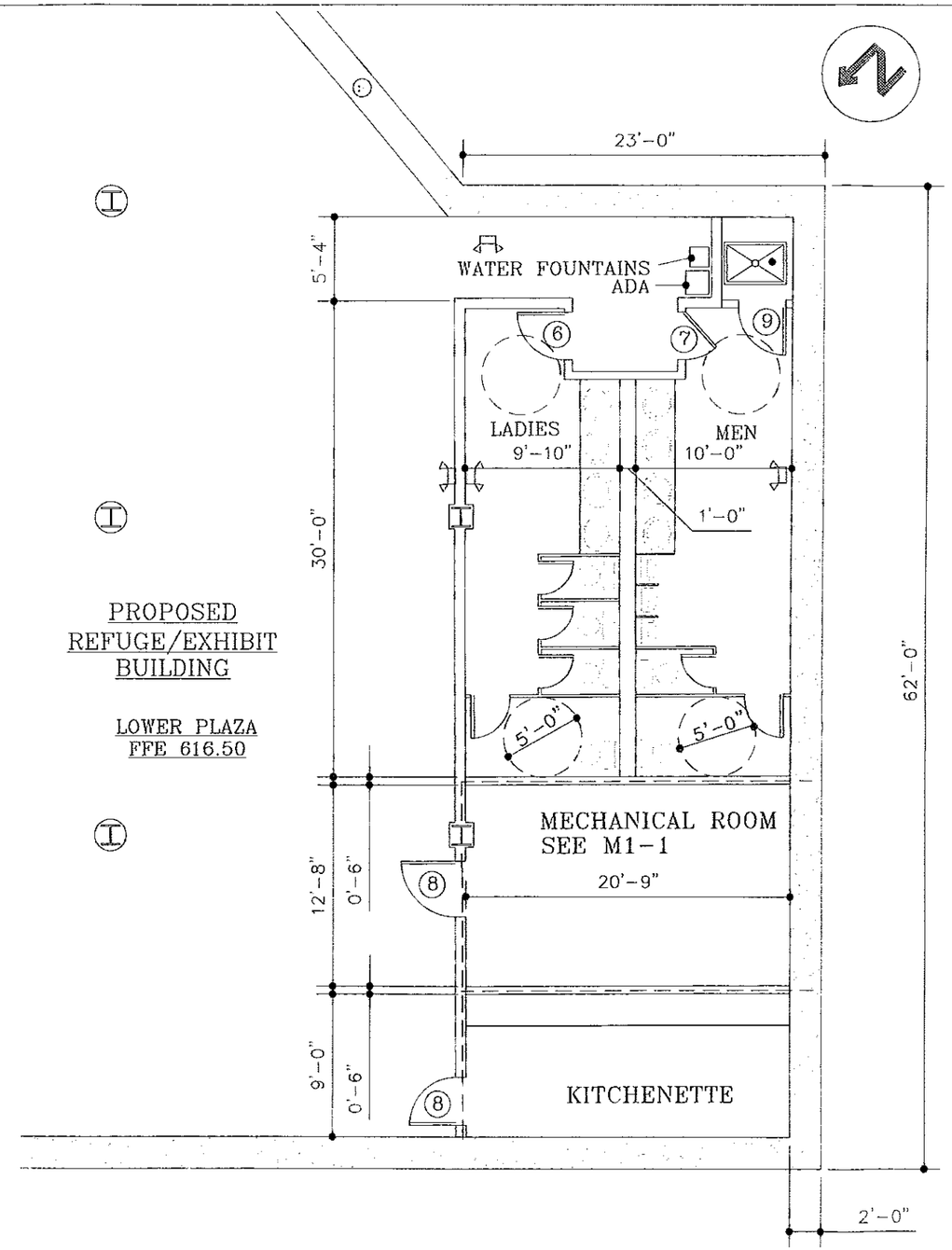

PROPOSED
REFUGE/EXHIBIT
BUILDING

LOWER PLAZA
FFE 616.50

(A) LOWER FLOOR PLAN
SCALE: 1/4" = 1'-0"

L E G E N D:

- EXISTING WALL TO BE REMOVED
- EXISTING WALL
- PROPOSED NEW WALL

REVISIONS	
9 / 2 / 2005	04/12/2013
12 / 12 / 2009	
05 / 10 / 2011	
02 / 18 / 2013	
03 / 22 / 2013	

CENTER FOR HELLENIC STUDIES
PAIDEIA (UCONN)
DOG LANE
MANSFIELD, CONNECTICUT

DETAILED FLOOR PLAN
BATHROOMS

AS SHOWN | 05/26/2008

ARCHITECTURE
PLANNING
DEVELOPMENT
Stephan Nousiopoulos, AIA
SGZ ASSOCIATES

A1.3

WASHROOM ACCESSORIES

A. B-3471 CLASSIC SERIES SEAT-COVER DISPENSER AND TOILET TISSUE
B. B-5806 x 42 HORIZONTAL GRAB BAR
C. B-4998 WALL MOUNTED SWING BAR
D. B-3574 CLASSIC SERIES SEAT-COVER DISPENSER SANITARY NAPKIN DISPOSAL AND TOILET TISSUE DISPENSER
E. B-2210 SURFACE MOUNTED DIAPER CHANGING
F. B-3944 RECESSED PAPER TOWEL DISPENSER (H) AND WASTE RECEPTACLE
G. B-293 SERIES TILT MIRROR #2436
H. B-165 FRAMED MIRROR # 2436
I. B-357 CLASSIC SERIS SEAT-COVER DISPENSER SANITARY NAPKIN DISPOSAL AND TOILET TISSUE DISPENSER
J. B-822 LOTION SOAP DISPENSER 34 FL. OZ.
K. B-5806 x 36 HORIZONTAL GRAB BAR

N O T E S :

WASHROOM ACCESSORIES AND TOILET PARTITIONS TO BE BY BOBRICK IN ACCORDANCE TO MANUFACTURE'S RECOMANDATIONS AND IN ACCORDANCE TO THE AMERICANS WITH DISABILITIES ACT (ADA)

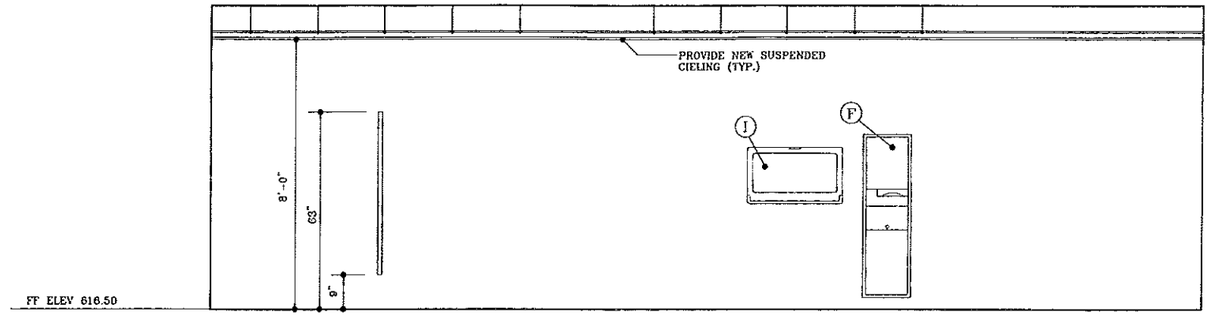

A ELEVATION
SCALE: 1/2" = 1'-0"

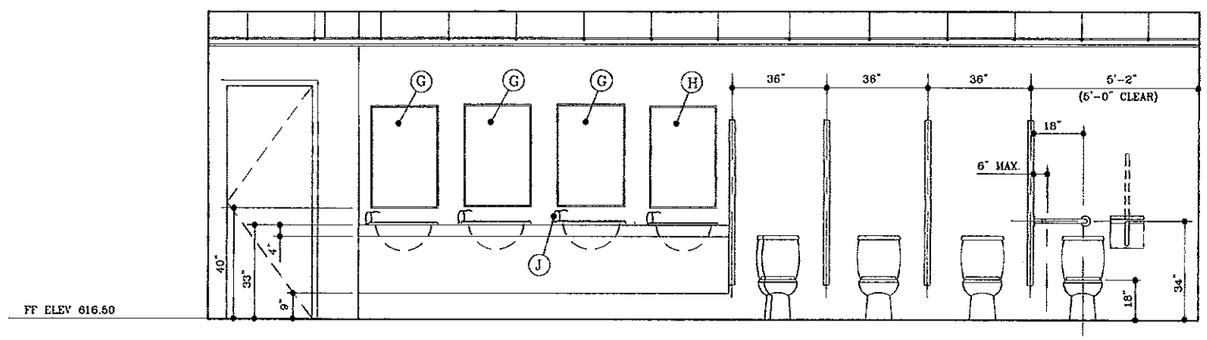

B ELEVATION
SCALE: 1/2" = 1'-0"

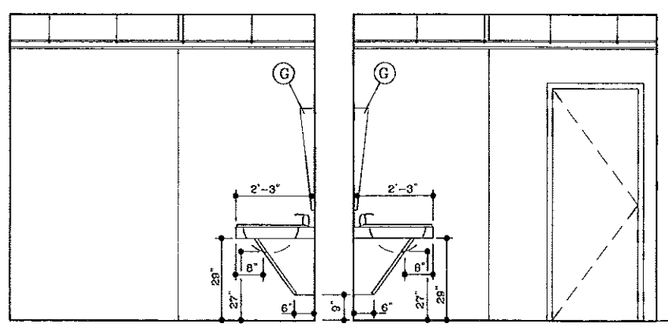

E ELEVATION
SCALE: 1/2" = 1'-0"

D ELEVATION
SCALE: 1/2" = 1'-0"

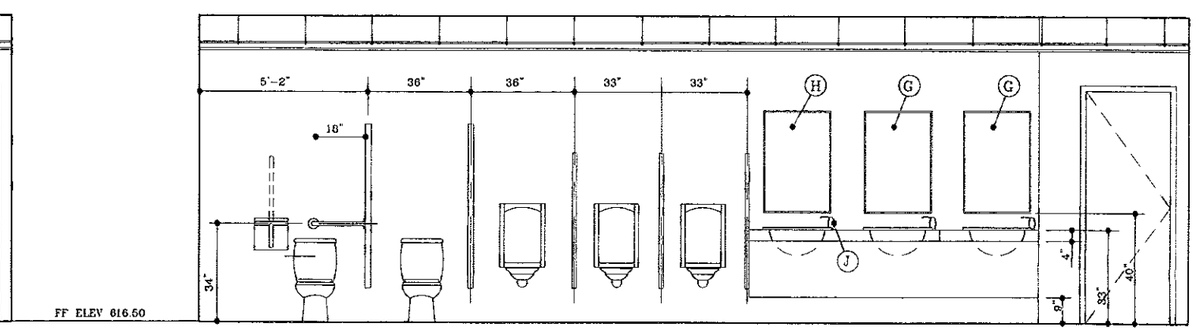

C ELEVATION
SCALE: 1/2" = 1'-0"

REVISIONS	
09 / 12 / 2005	
02 / 18 / 2013	
03 / 22 / 2013	
04 / 12 / 2013	

CENTER FOR HELLENIC STUDIES
PAIDEIA (UCONN)
DOG LANE
MANSFIELD, CONNECTICUT

PROPOSED BATHROOM
ELEVATIONS

AS SHOWN | 4/11/2002

ARCHITECTURE
PLANNING
DEVELOPMENT
Stephen Nousiopoulos, AIA
372 West Main Street • Norwich, CT 06360
Office/Fax 860-234-0512
email: snousiopoulos@snet.net
SGN ASSOCIATES

A1.4

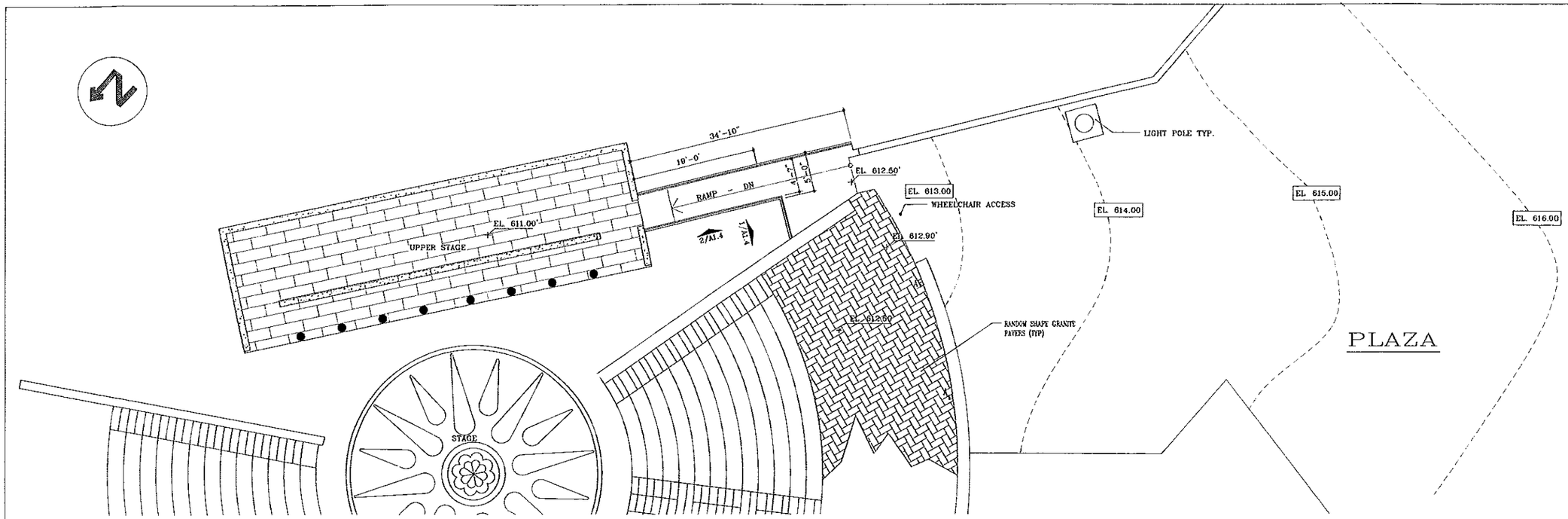

B UPPER STAGE
SCALE: 1/8" = 1'-0"

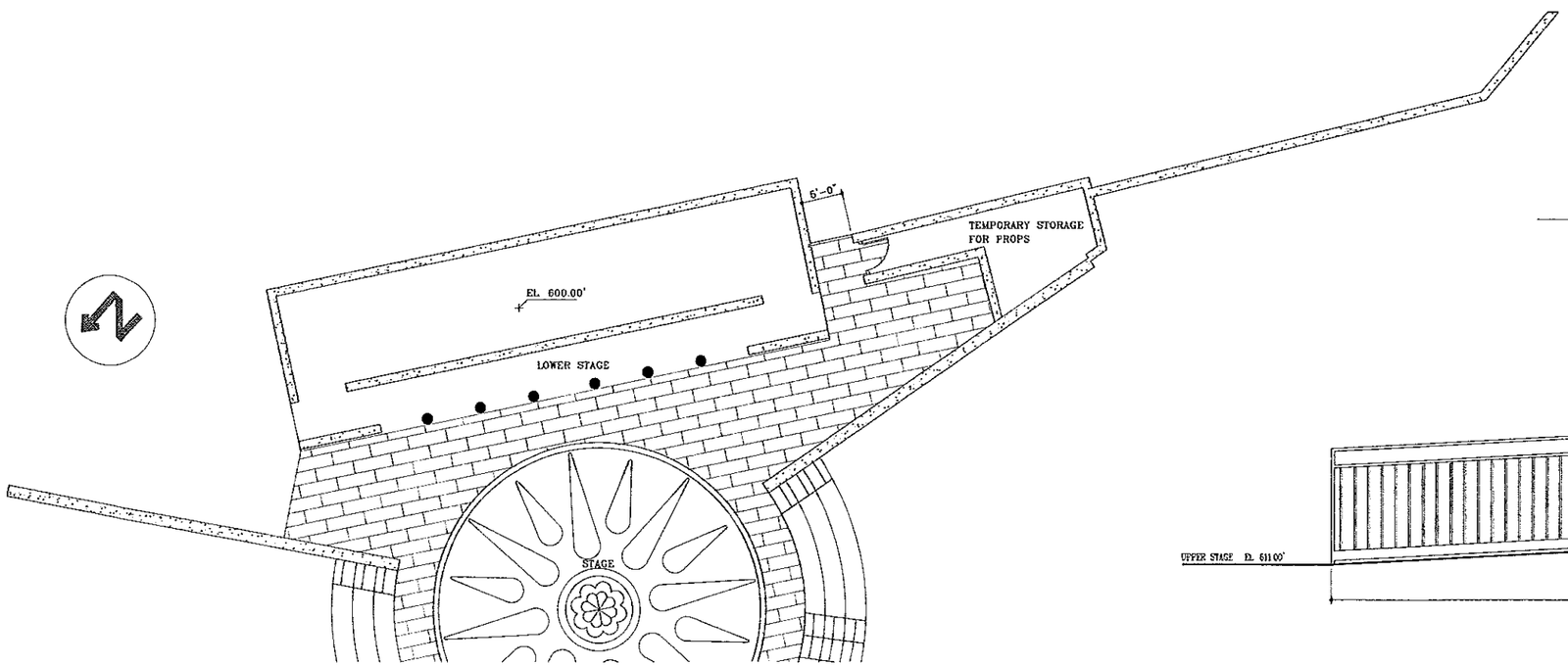

A LOWER STAGE
SCALE: 1/8" = 1'-0"

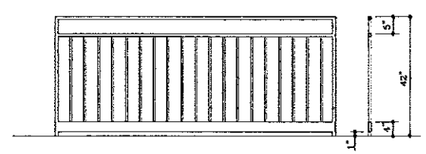

1 ELEVATION
SCALE: 1/2" = 1'-0"

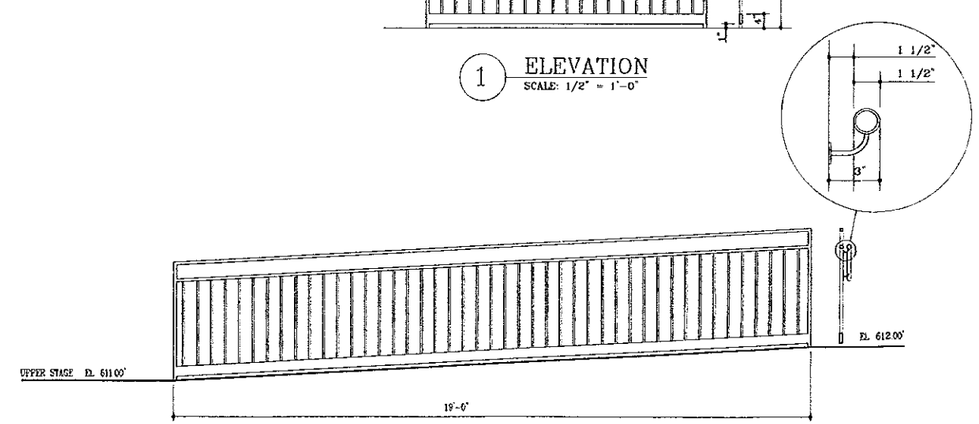

2 ELEVATION
SCALE: 1/2" = 1'-0"

04/22/2013

REVISIONS

09	02	2005
12	12	2007
04	01	2010
02	18	2013
03	22	2013

CENTER FOR HELLENIC STUDIES
PAIDEIA (UCONN)
DOG LANE
MANSFIELD, CONNECTICUT

UPPER & LOWER STAGE

AS SHOWN | 05/26/2008

ARCHITECTURE
PLANNING
DEVELOPMENT

Stephan Nousiopoulos, AIA
372 West Main Street • Norwich, CT 06360
Office/Fax 860.204.0512
email: nousiopoulos@snet.net

SGN AS SOCIATES

A1.5

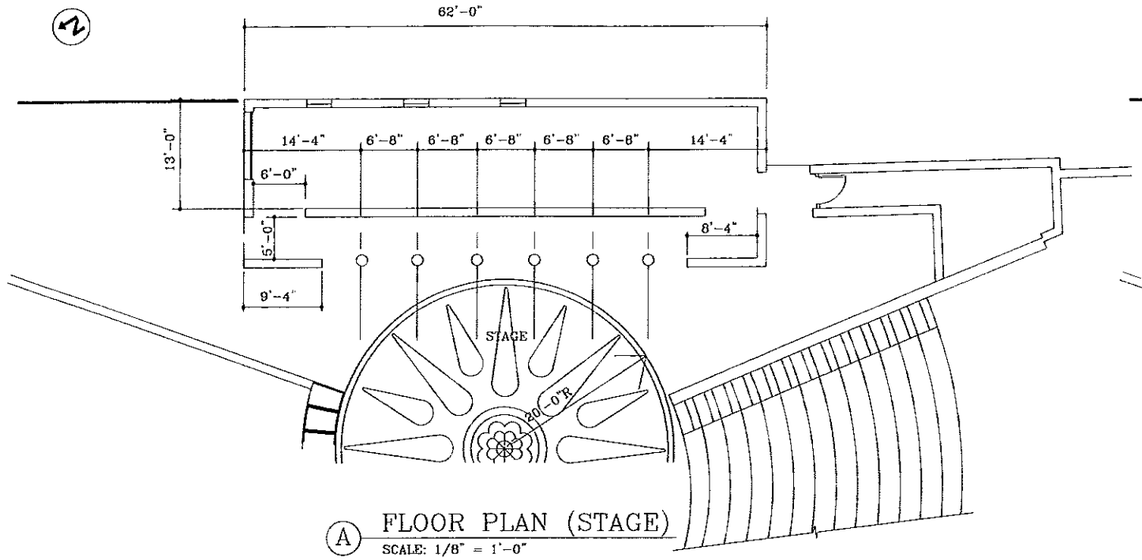

A FLOOR PLAN (STAGE)
SCALE: 1/8" = 1'-0"

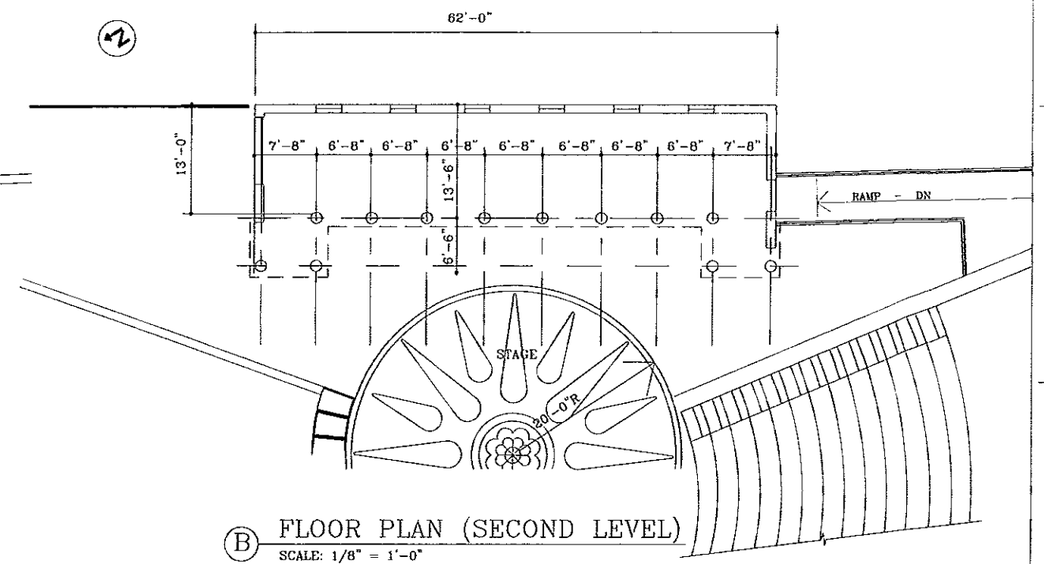

B FLOOR PLAN (SECOND LEVEL)
SCALE: 1/8" = 1'-0"

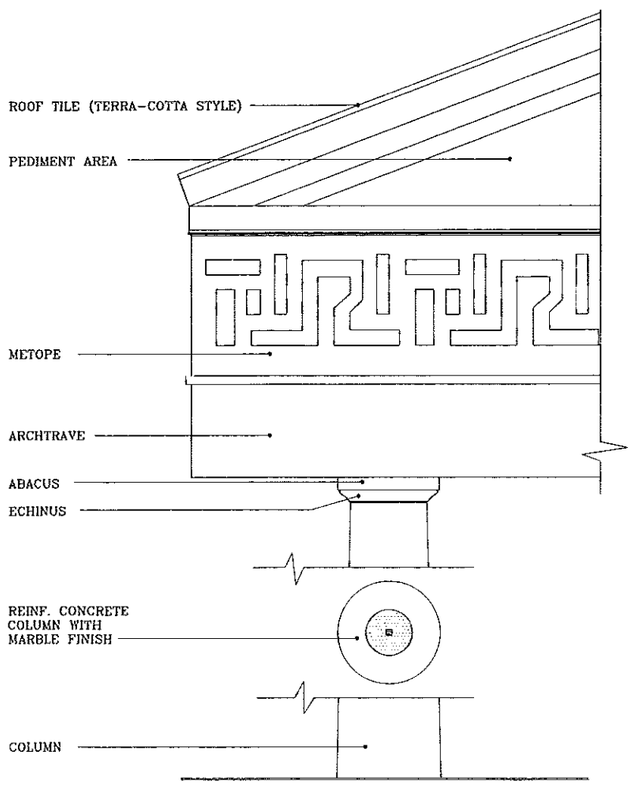

G ENTABLATURE AND COLUMN DETAIL
SCALE: 1 1/2" = 1'-0" (USE SCALE FOR PROPORTIONS ONLY)

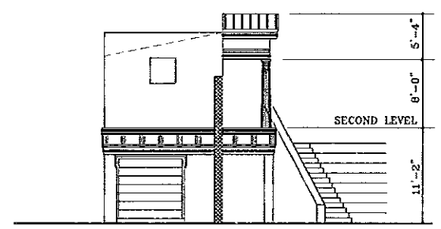

C SIDE ELEVATION
SCALE: 1/8" = 1'-0"

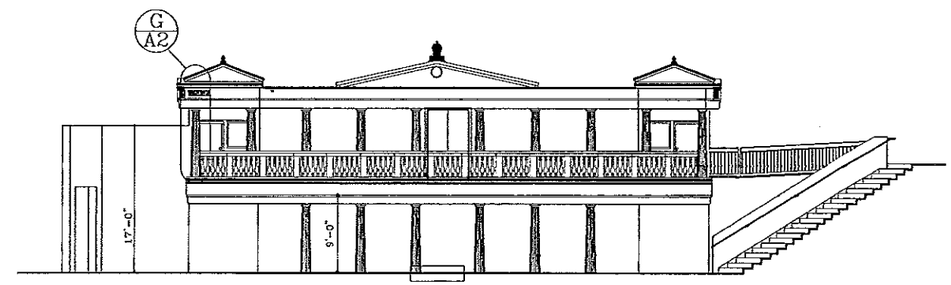

D FRONT ELEVATION
SCALE: 1/8" = 1'-0"

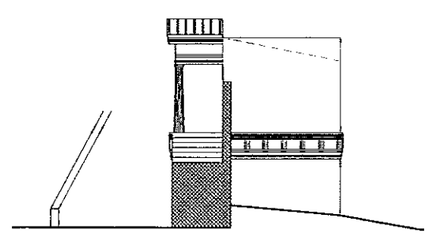

F SIDE ELEVATION
SCALE: 1/8" = 1'-0"

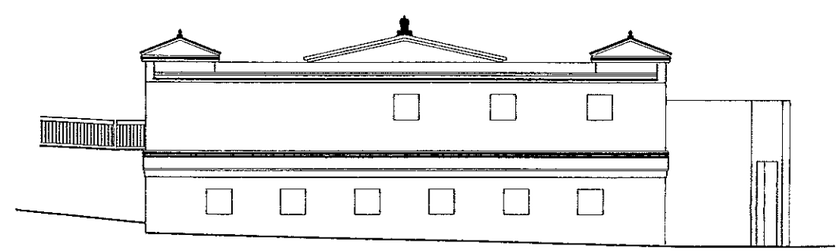

E REAR ELEVATION
SCALE: 1/8" = 1'-0"

REVISIONS	
04 / 01 / 2010	
02 / 18 / 2013	
03 / 22 / 2013	
04 / 12 / 2013	

CENTER FOR HELLENIC STUDIES
PAIDEIA (UCONN)
DOG LANE
MANSFIELD, CONNECTICUT

STAGE ELEVATIONS

AS SHOWN 05/26/2008

ARCHITECTURE
PLANNING
DEVELOPMENT

Stephen Nousiopoulos, AIA
SGN ASSOCIATES
77 West Main Street - 1st
Norwich, CT 06360
Office: 860-886-0221
email: snousiopoulos@snaa.net

A2.1

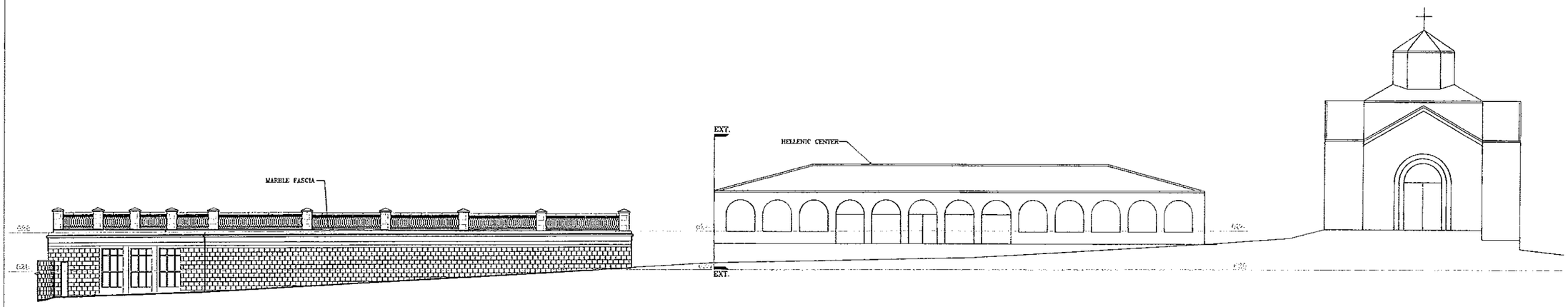

A NORTHWEST ELEVATION
SCALE: 1" = 10'-0"

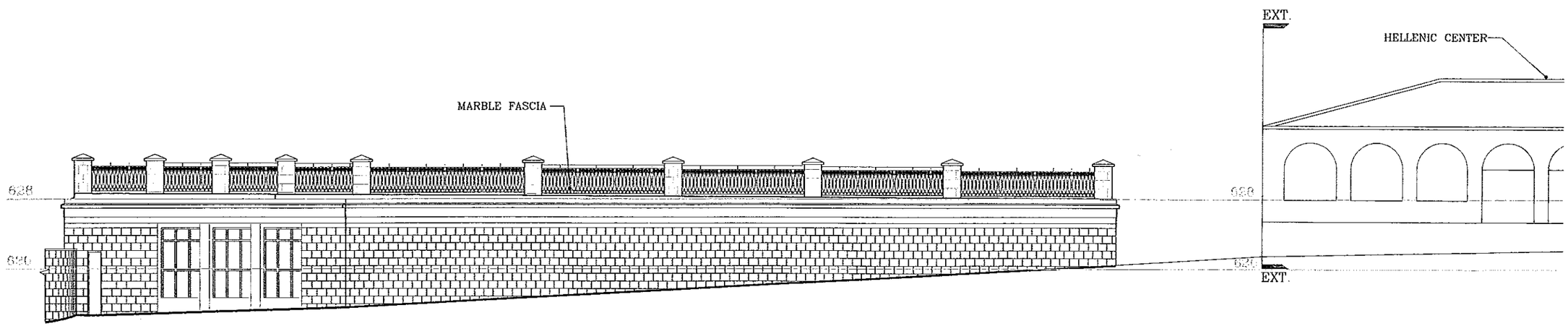

B NORTHWEST ELEVATION
SCALE: 1" = 1'-0"

REVISIONS
9 / 2 / 2005
12 /12/ 2009
02 /18/ 2013
03 /22 / 2013
04 /12 / 2013

CENTER FOR HELLENIC STUDIES
PAIDEIA (UCONN)
DOG LANE
MANSFIELD, CONNECTICUT

ELEVATIONS
PROPOSED
AS SHOWN
05/26/2008

ARCHITECTURE
PLANNING
DEVELOPMENT

Stephan Nousiopoulos, AIA
372 West Main Street • Norwich, CT 06360
Office Fax 860.204.0512
email: nousiopoulos@sgnz.net

A2.2

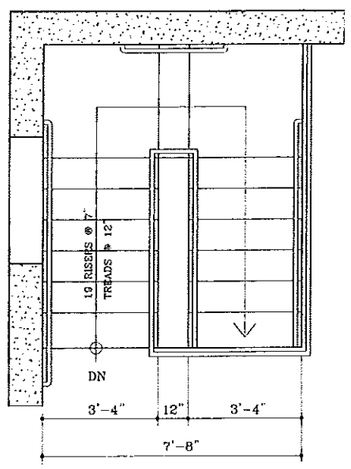

5 STAIR PLAN
SCALE: 1/2" = 1'-0"

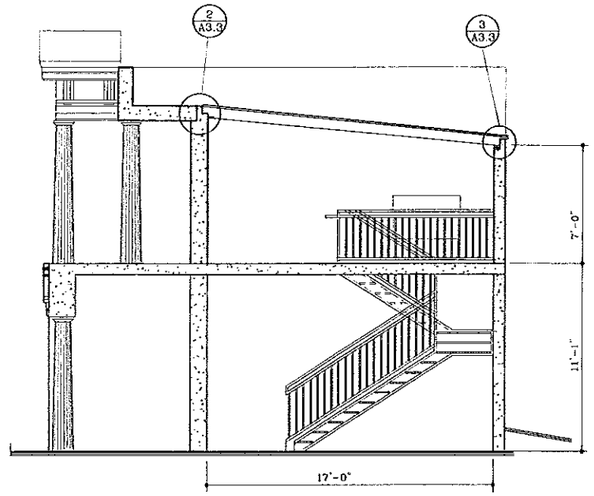

1 BUILDING SECTION
SCALE: 1/4" = 1'-0"

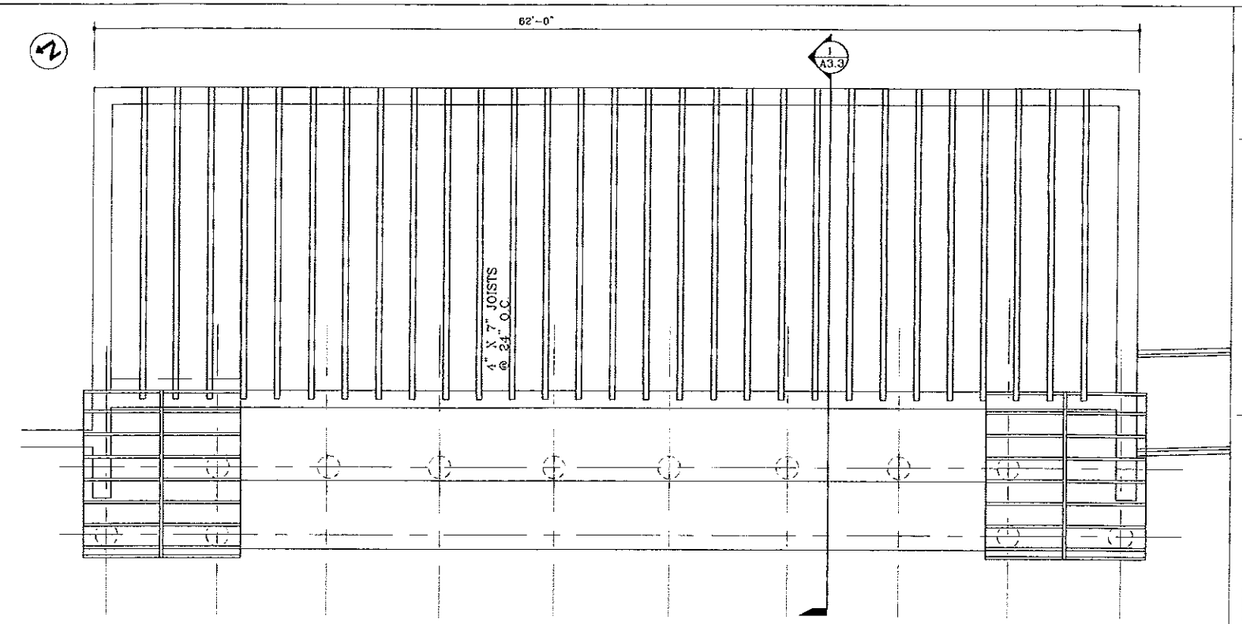

A FLOOR PLAN (SECOND LEVEL)
SCALE: 1/4" = 1'-0"

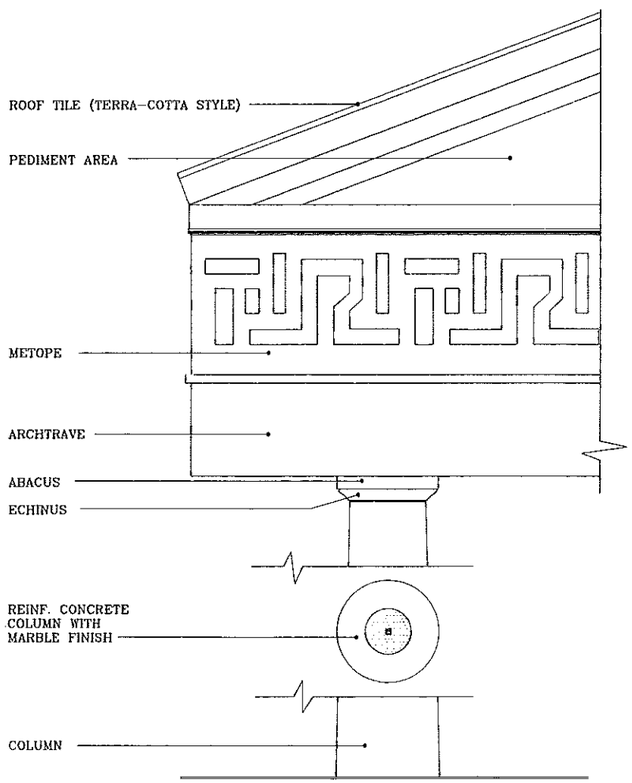

G ENTABLATURE AND COLUMN DETAIL
SCALE: 1 1/2" = 1'-0" (USE SCALE FOR PROPORTIONS ONLY)

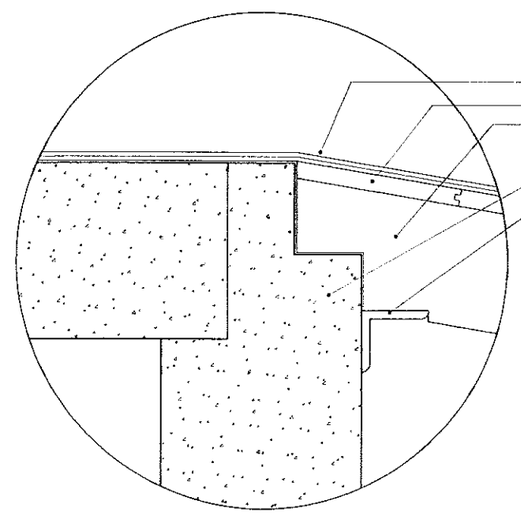

3 SECTION DETAIL
SCALE: 3" = 1'-0"

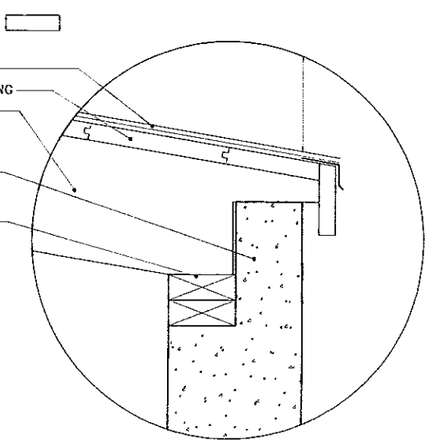

4 SECTION DETAIL
SCALE: 3" = 1'-0"

BUILDING / STRUCTURE INFORMATION
TWO STORY CONCRETE AND MASONRY CLASSICAL GREEK AMPHITHEATER
USE GROUP A-5, A-3
TYPE OF CONSTUCTION 2-C

REVISIONS

05	18	2010
06	06	2010
02	18	2013
03	22	2013
04	12	2013

CENTER FOR HELLENIC STUDIES
PAIDEIA (UCONN)
DOG LANE
MANSFIELD, CONNECTICUT

STAGE ELEVATIONS

AS SHOWN | 05/26/2008

ARCHITECTURE
PLANNING
DEVELOPMENT
Stephan Nousiopoulos, AIA
372 West Main Street • Norwich, CT 06360
Office/Fax 860.204.0512
email: snousiopoulos@snet.net

SGN ASSOCIATES

A2.3

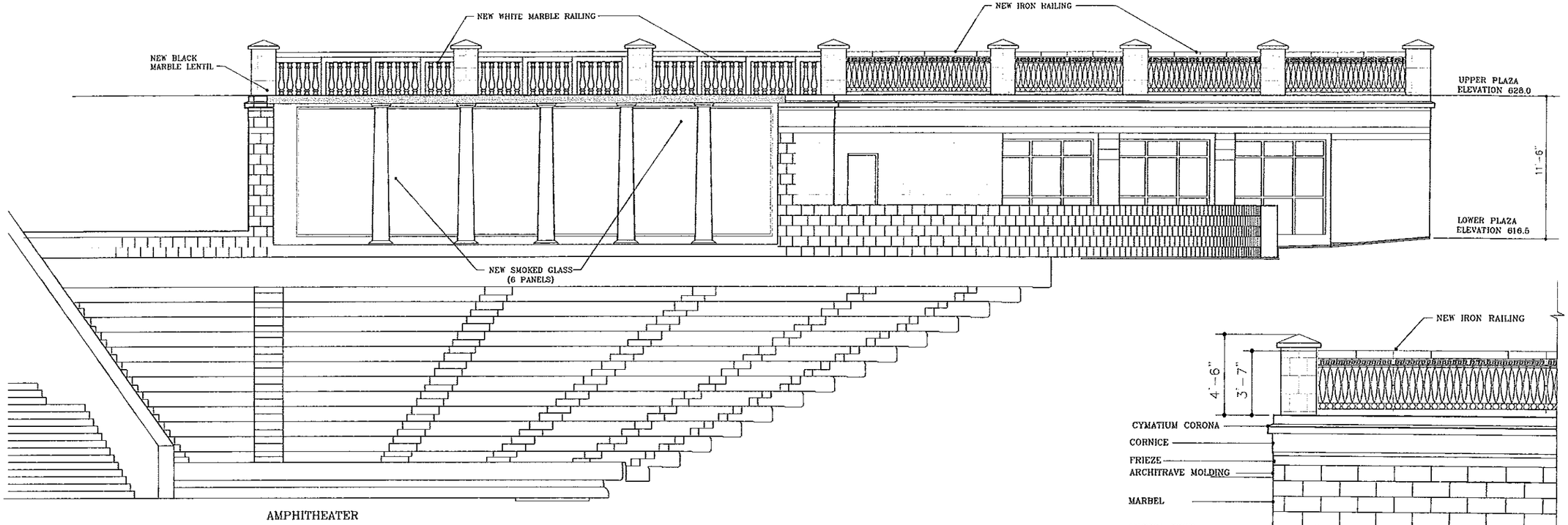

A EAST ELEVATION
SCALE: 1/4" = 1'-0"

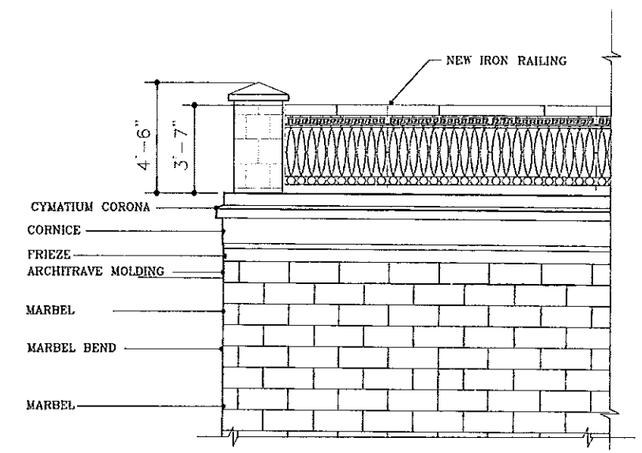

C ELEVATION (DETAIL)
SCALE: 1/2" = 1'-0"

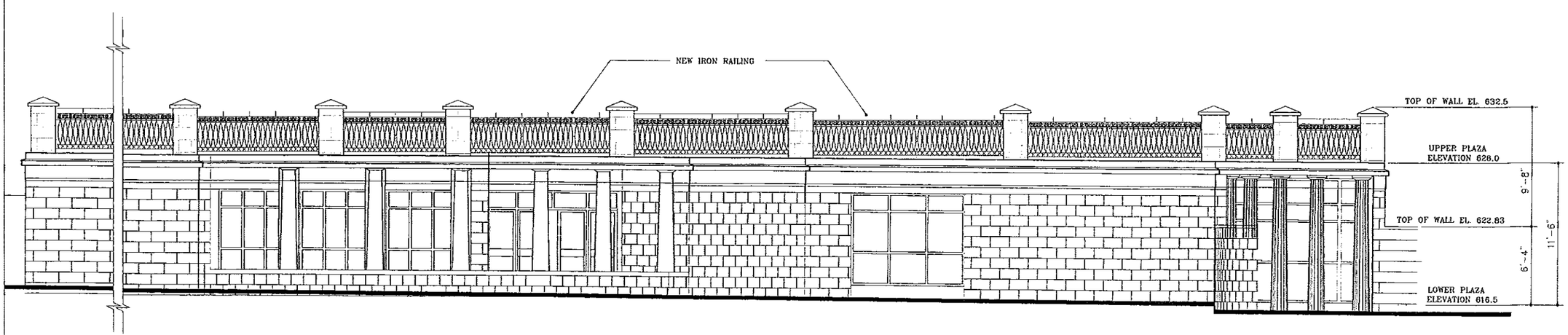

A SOUTH ELEVATION
SCALE: 1/4" = 1'-0"

REVISIONS
9 / 2 / 2005
12 / 12 / 2009
02 / 18 / 2013
03 / 22 / 2013
04 / 12 / 2013

CENTER FOR HELLENIC STUDIES
PAIDEIA (UCONN)
DOG LANE
MANSFIELD, CONNECTICUT

ELEVATIONS
PROPOSED
LANDSCAPE ARCHITECT
AS SHOWN
05/26/2008

ARCHITECTURE
PLANNING
DEVELOPMENT

Stephan Nousiopoulos, AIA
372 West Main Street • Norwich, CT 06360
Office/Fax: 860.334.0912
email: nousiopoulos@sgn.net

SGN ASSOCIATES

A2.4

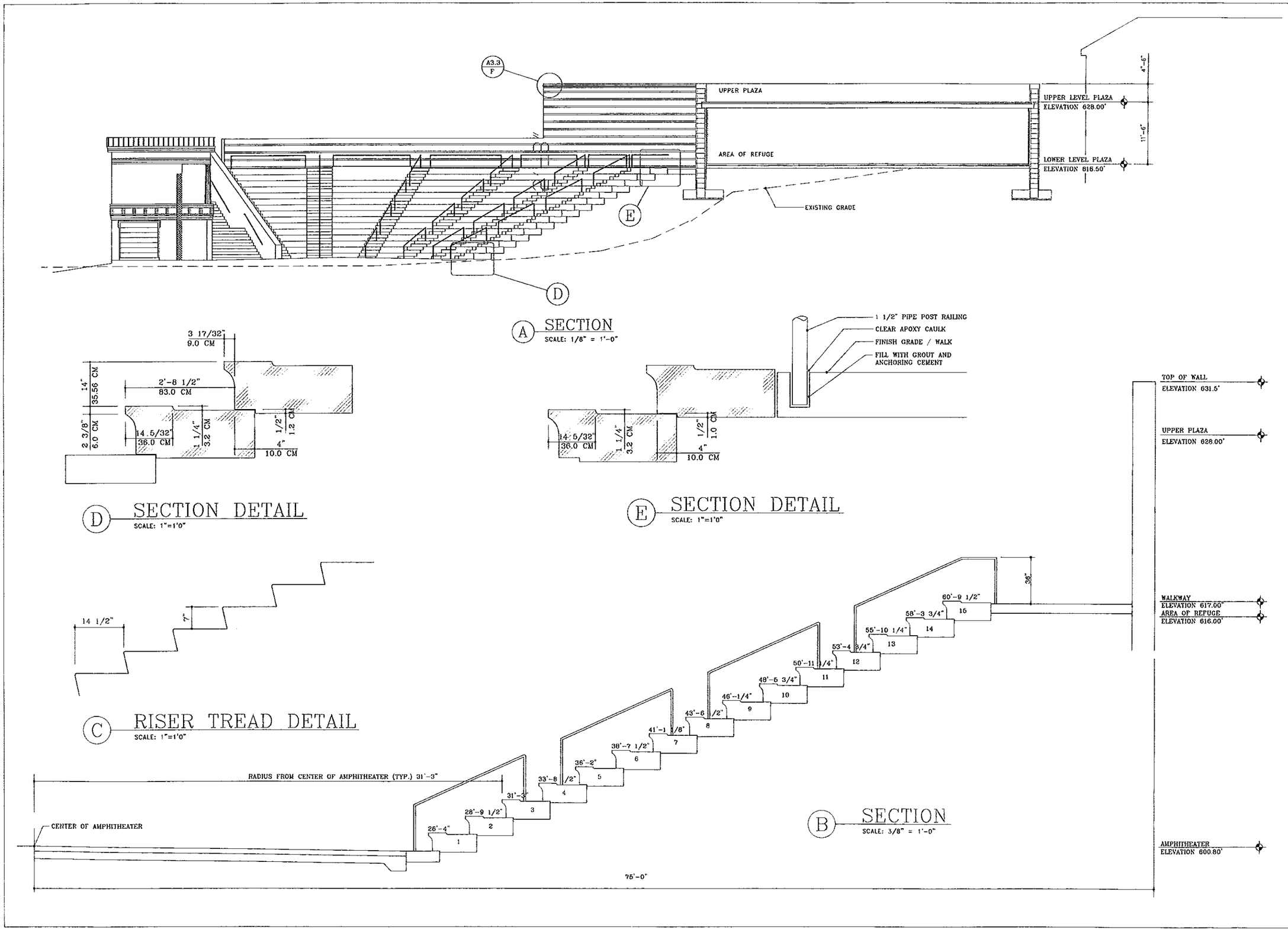

A SECTION
SCALE: 1/8" = 1'-0"

D SECTION DETAIL
SCALE: 1"=1'0"

E SECTION DETAIL
SCALE: 1"=1'0"

C RISER TREAD DETAIL
SCALE: 1"=1'0"

B SECTION
SCALE: 3/8" = 1'-0"

REVISIONS

02 /18/	2013
03 /22/	2013
04 /12/	2013

CENTER FOR HELLENIC STUDIES
PAIDEIA (UCONN)
DOG LANE
MANSFIELD, CONNECTICUT

SECTIONS
DETAILS

AS SHOWN | 05/26/2008

ARCHITECTURE
PLANNING
DEVELOPMENT

Stephan Nousiopoulos, AIA
372 West Main Street • Norwich, CT 06360
Office/Fax 860.234.0512
email: nousiopoulos@sgn.net

A2.5

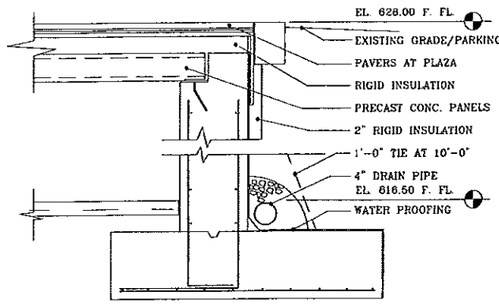

1 SECTION DETAIL

SCALE: 1/2" = 1'-0"

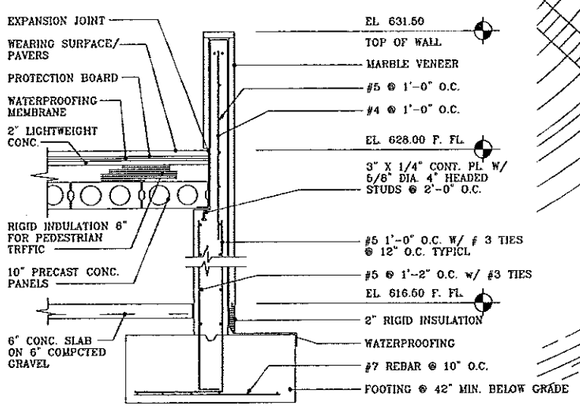

2 SECTION DETAIL

SCALE: 1/2" = 1'-0"

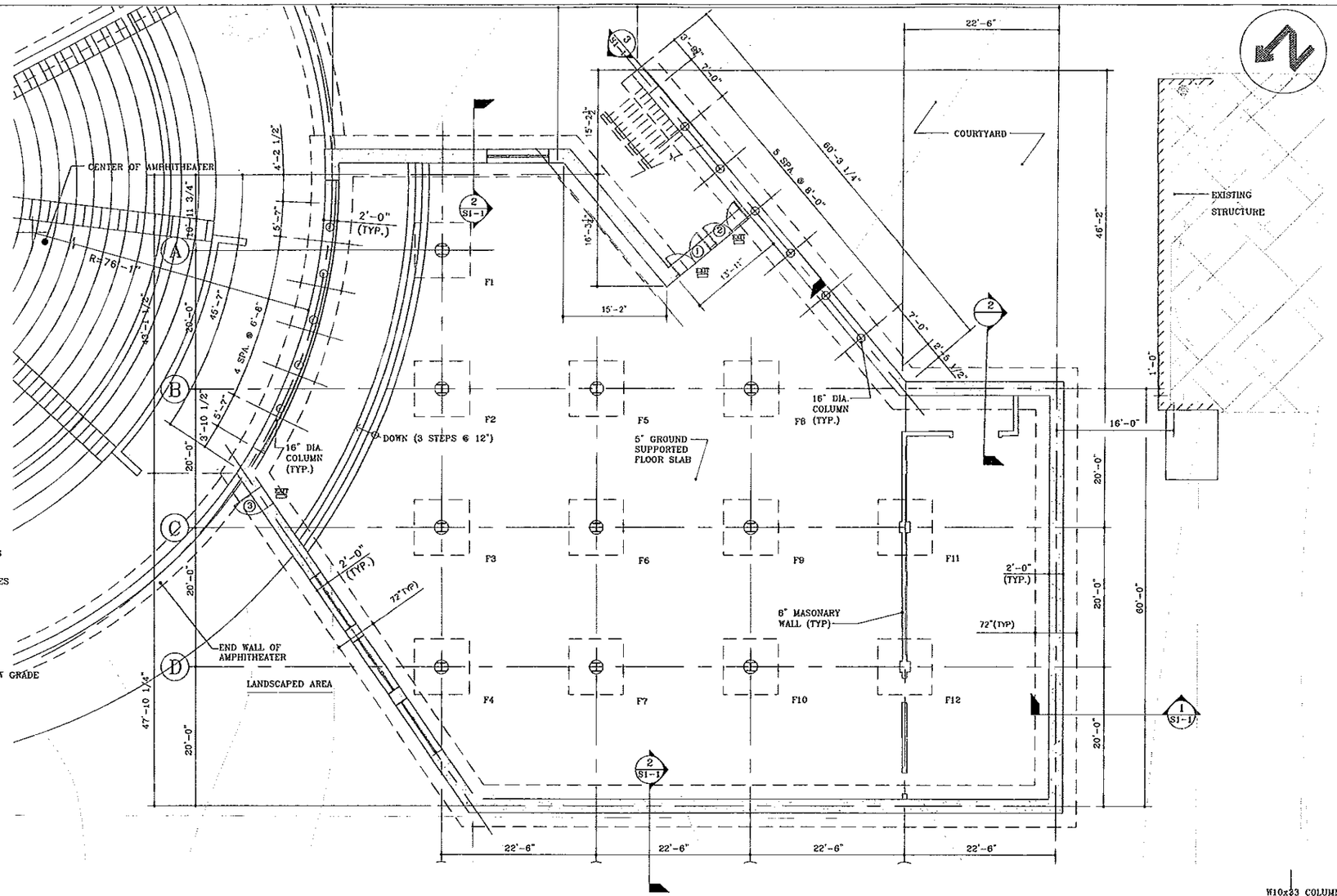

A FOUNDATION PLAN

SCALE: 1/8" = 1'-0"

FOOTING SCHEDULE			
MARK	SIZE	THICKNESS	REINFORCING
F1	8'-0" x 8'-0"	2'-0"	#7 REBAR @ 10"oc
F2	8'-0" x 8'-0"	2'-0"	#7 REBAR @ 10"oc
F3	8'-0" x 8'-0"	2'-0"	#7 REBAR @ 10"oc
F4	8'-0" x 8'-0"	2'-0"	#7 REBAR @ 10"oc
F5	8'-0" x 8'-0"	2'-0"	#7 REBAR @ 10"oc
F6	8'-0" x 8'-0"	2'-0"	#7 REBAR @ 10"oc
F7	8'-0" x 8'-0"	2'-0"	#7 REBAR @ 10"oc
F8	8'-0" x 8'-0"	2'-0"	#7 REBAR @ 10"oc
F9	8'-0" x 8'-0"	2'-0"	#7 REBAR @ 10"oc
F10	8'-0" x 8'-0"	2'-0"	#7 REBAR @ 10"oc
F11	8'-0" x 8'-0"	2'-0"	#7 REBAR @ 10"oc
F12	8'-0" x 8'-0"	2'-0"	#7 REBAR @ 10"oc

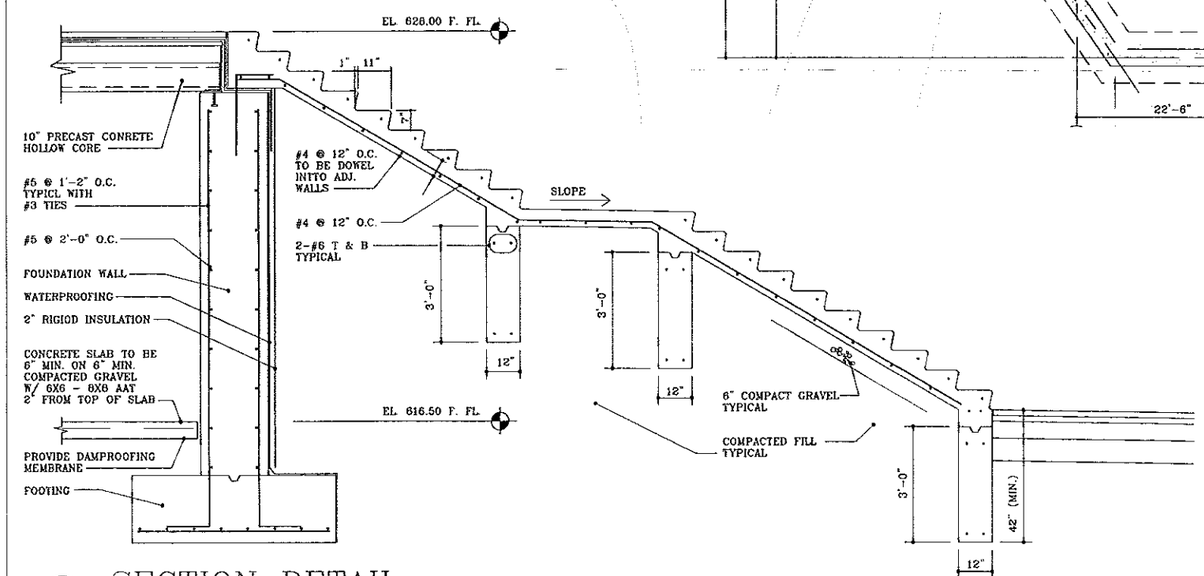

3 SECTION DETAIL

SCALE: 1/2" = 1'-0"

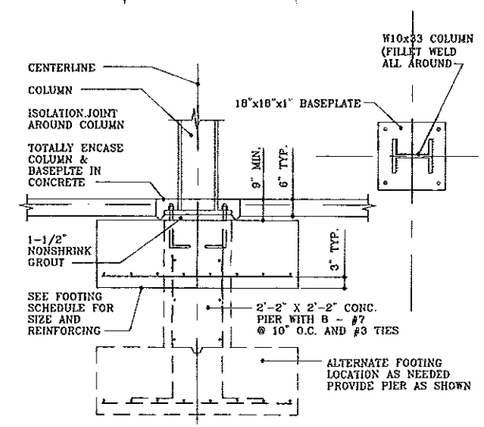

4 SECTION DETAIL

SCALE: 1/2" = 1'-0"

CENTER FOR HELLENIC STUDIES
PAIDEIA (UCONN)
DOG LANE
MANSFIELD, CONNECTICUT

FOUNDATION PLAN

AS SHOWN | 02/15/2003

REVISIONS
02/18/2013
03/22/2013
04/12/2013

STRUCTURAL ENGINEER

PAUL A. TSAKOPOULOS P.E.
DYER WEST MAIN STREET, NORWICH, CT. 06360

S1.1

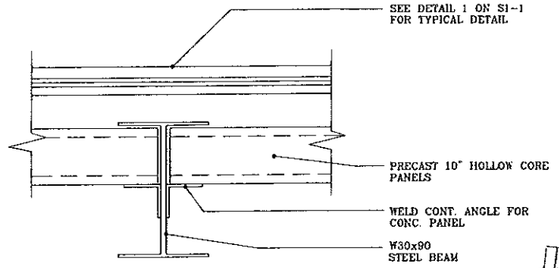

NOTE:

ALL CONNECTIONS SHALL BE SUFFICIENT TO DEVELOP THE CAPACITY OF BEAMS FOR SIZE AND SPANS SHOWN.

ALL SHOP CONNECTIONS SHALL BE WELDED

1 SECTION DETAIL

SCALE: 1" = 1'-0"

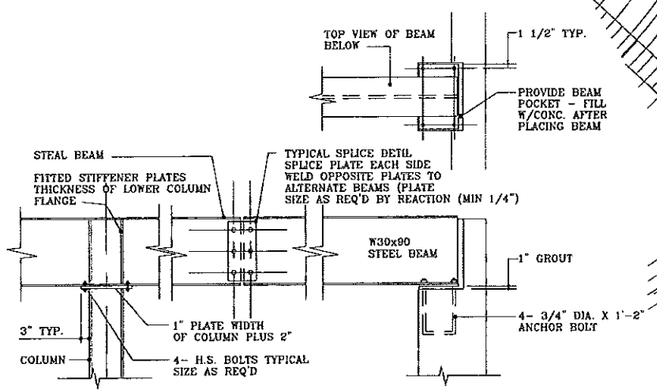

2 SECTION DETAIL

SCLE: 1/2" = 1'-0"

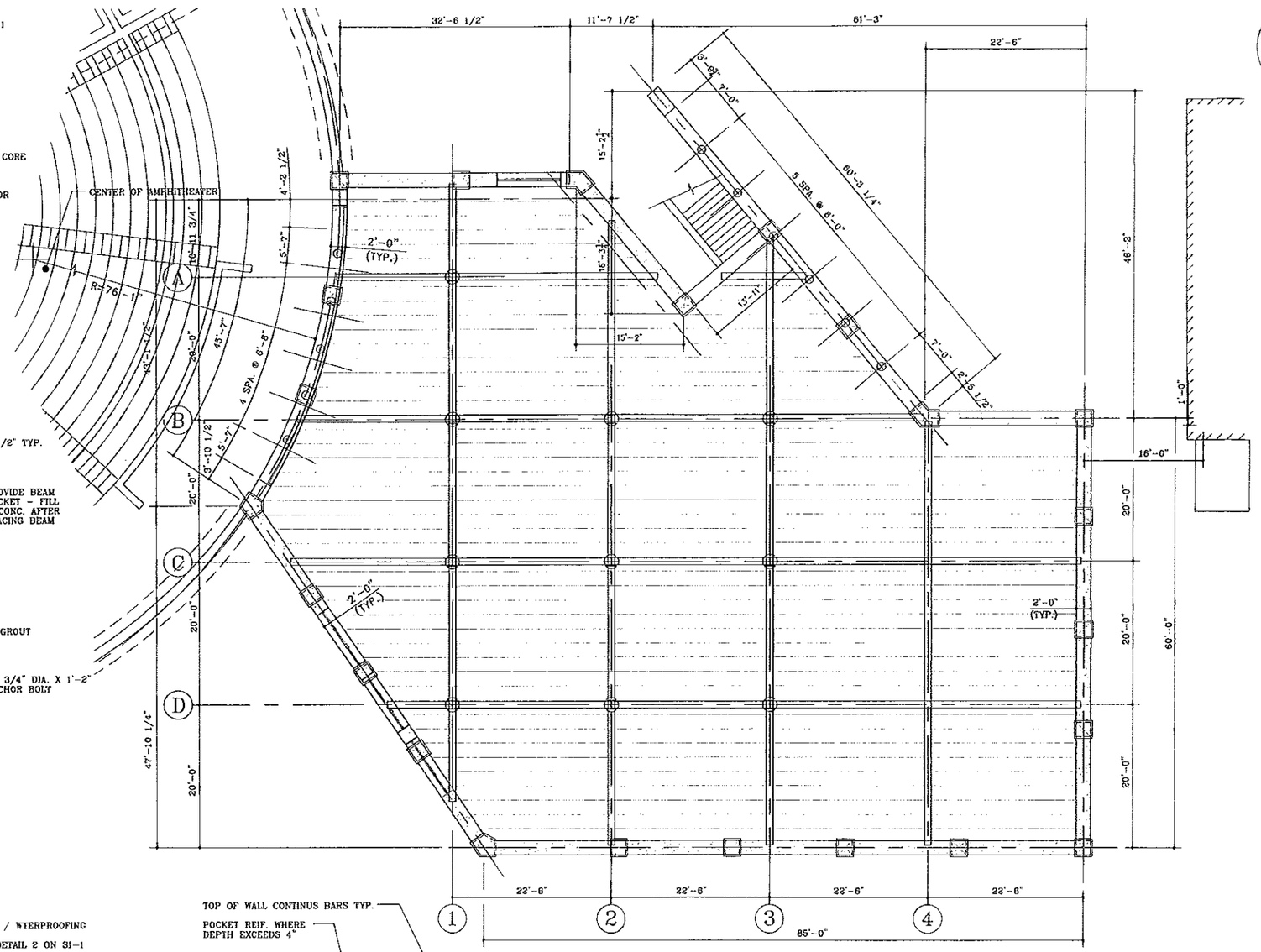

A FLOOR PLAN

SCALE: 1/8" = 1'-0"

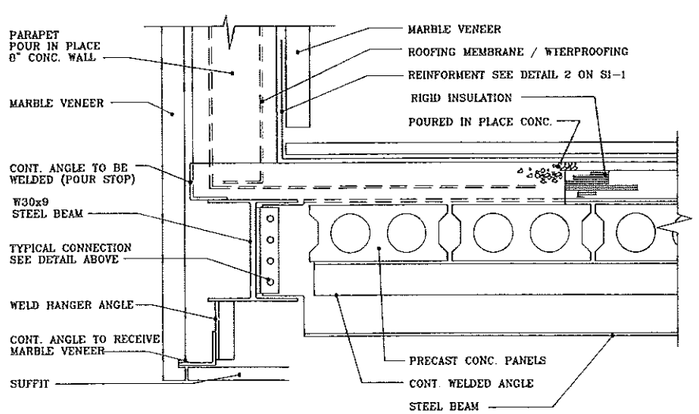

4 SECTION DETAIL

SCALE: 1" = 1'-0"

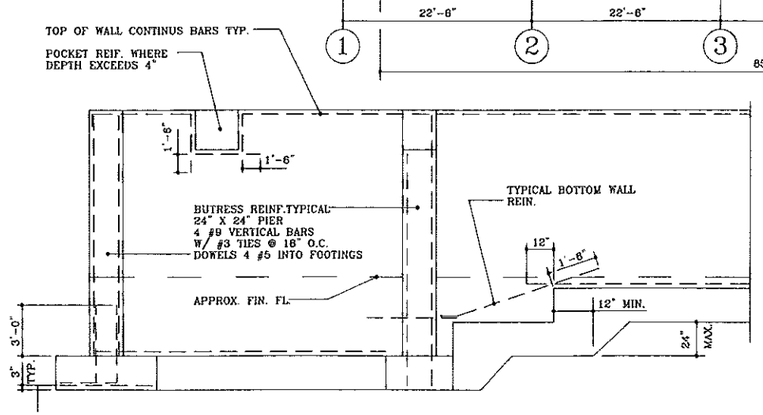

3 BUTRESS, POCKET, & STEPPED FTG

NO SCALE

FRAMING PLAN
UPPER LEVEL

AS SHOWN | 02/15/2003

CENTER FOR HELLENIC STUDIES
PAIDEIA (UCONN)
DOG LANE
MANSFIELD, CONNECTICUT

REVISIONS

02/18/2013
03/22/2013
04/12/2013

STRUCTURAL ENGINEER

PAUL A. TSAKOPOULOS P.E.
572 WEST MAIN STREET, NORWICH, CT. 06360

S1.2

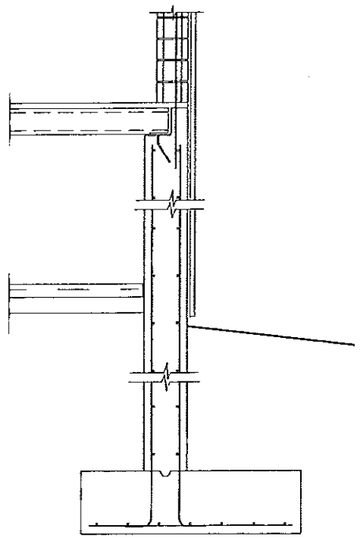

1 SECTION DETAIL
SCALE: 1/2" = 1'-0"

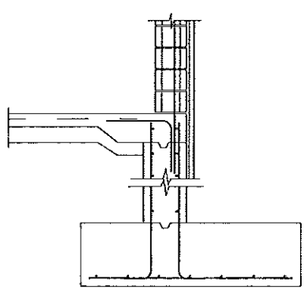

2 SECTION DETAIL
SCALE: 1/2" = 1'-0"

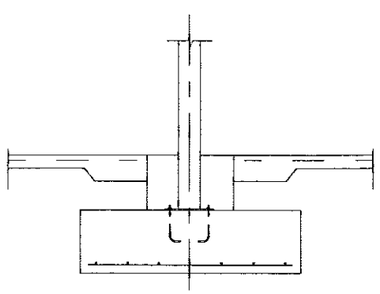

3 SECTION DETAIL
SCALE: 1/2" = 1'-0"

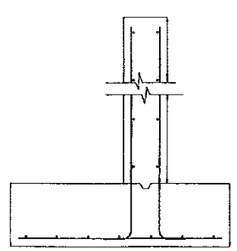

4 SECTION DETAIL
SCALE: 1/2" = 1'-0"

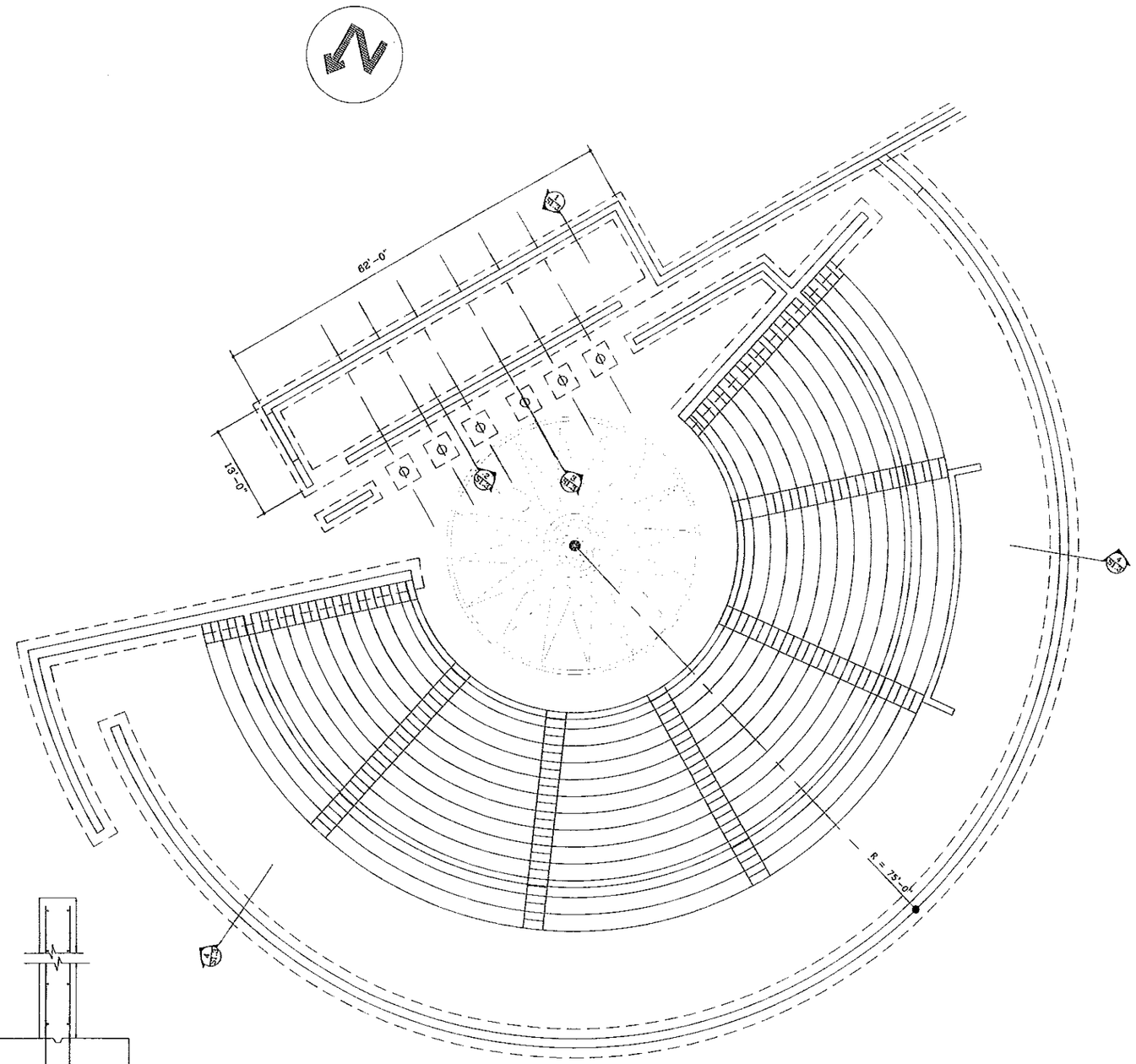

A FOUNDATION PLAN
SCALE: 1/8" = 1'-0"

CENTER FOR HELLENIC STUDIES
PAIDEIA (UCONN)
DOG LANE
MANSFIELD, CONNECTICUT

FOUNDATION PLAN (UPPER)
AS SHOWN | 02/15/2003

REVISIONS

02	/18/	2013
03	/22/	2013
04	/12/	2013

STRUCTURAL ENGINEER

PAUL A. TSAKOPOULOS P.E.
372 WEST MAIN STREET, NORWICH, CT. 06360

S1.3