TOWN OF MANSFIELD

Public Works Department
Request For Proposal (RFP)

Removal and Relocation of Decorative Sidewalk Light

Submission Deadline:

2:00 p.m., Thursday, July 14, 2016

Submission Contact and Address:

Office of the Director of Finance

Finance Department

4 South Eagleville Road

Mansfield, Connecticut 06268

www.mansfieldct.gov

TABLE OF CONTENTS

1.0 INSTRUCTIONS TO BIDDERS

1.01 Time for Opening Bids
1.02 Scope of Work
1.03 Preparation of Proposals
1.04 Submission of Proposals
1.05 Cost of Bid Preparation
1.06 Familiarity with the Work
1.07 Addenda and Interpretations
1.08 Samples
1.09 Anti-Discrimination
1.10 Applicable Law
1.11 Interpretation of Bids
1.12 Interpretation – Parol Evidence
1.13 Delivery
1.14 Award of Contract
1.15 Best Customer Preferential Pricing
1.16 Certification
1.17 Clayton Act Assignment of Rights
1.18 Contract
1.19 Contract Amendments
1.20 Gratuities
1.21 Insurance
1.22 Indemnification
1.23 Law of Waiver
1.24 Licenses
1.25 Public Record
1.26 Property Tax Assessment
1.27 Provisions Required by Law
1.28 Relationship of Parties
1.29 Rights and Remedies
1.30 Severability
1.31 Subcontracts
1.32 Submission of Invoices
1.33 Toxic Substances
1.34 Vendor Warranty

2.0 BID FORMS

Bid Proposal Form
Attachment A – Insurance Requirements
Attachment B – Questionnaire Concerning Occupational Health & Safety
Attachment C – Certification of Non-Collusion
Attachment D – Summary of Work Experience

3.0 TECHNICAL SPECIFICATONS / DETAILS

4.0 CONTRACT

INSTRUCTIONS TO BIDDERS

TOWN OF MANSFIELD
MANSFIELD, CONNECTICUT 06268

Removal and Relocation of a Decorative Sidewalk Light
Mansfield Department of Public Works

1.01: TIME FOR OPENING BIDS

All bids must be in a sealed envelope and received prior to **2:00 p.m., Thursday, July 14, 2016,** at the Office of the Director of Finance, 4 South Eagleville Road, Mansfield, Connecticut 06268.

1.02: SCOPE OF WORK

This work will consist of the following as specified below:

- Procure and obtain necessary permits, including but not limited to, Connecticut Department of Transportation Encroachment Permit and Town of Mansfield Building Department.
- Sawcut, removal, and disposal of concrete sidewalk.
- De-energize existing sidewalk light circuit and follow Contractor's LOTO procedure (Town maintains keys for these cabinets). Remove existing wiring within sidewalk lights that will be impacted.
- Excavate to remove existing precast concrete base. Install and compact gravel to necessary grade. Reconnect 2" PVC conduit as necessary to new decorative light location. Install precast concrete base for light, install decorative light (provided by the Town), and reactivate circuit for sidewalk lights.
- Reinstall decorative concrete sidewalk and concrete sidewalk.

1.03: PREPARATION OF PROPOSALS

Proposals must be made upon forms contained herein. The blank spaces in the Proposal must be filled in correctly where indicated. The Bidder must state the prices for which he proposes to do each item of the work contemplated. In case of discrepancy where both words and the numerals are requested, the words shall govern. Ditto marks are not considered writing or printing and shall not be used. The Bidder shall sign his Proposal correctly. If the Proposal is made by an individual, his name, post office address and telephone number must be shown. If made by a firm, partnership, or corporation, the Proposal must be signed by an official of the firm, partnership, or corporation authorized to sign contracts, and must show the post office address and telephone number of the firm, partnership, or corporation. Failure to do so may disqualify the bid.

The bidder shall insert the price per stated unit and the extensions against each unit which he proposed to provide. In the event of a discrepancy between the unit price and the extension, the unit price shall govern. (If discounts are shown and there is an error in the extension of the total,

the discount offered shall govern.) If the price bid per unit is based on any unit other than that stated, the bidder shall state the unit on which the unit price is based.

Each bid must be submitted in a sealed envelope bearing on the outside the name of the Bidder, post office address, and name of the project for which the bid is submitted. If forwarded by mail, the sealed envelope containing the bid must be enclosed in another envelope addressed to: The Office of the Director of Finance, 4 South Eagleville Road, Mansfield, Connecticut 06268.

All information shall be entered in ink or by typewriter. Mistakes may be crossed out and corrections inserted before submission of your bid. The person signing the bid shall initial corrections in ink.

Corrections and/or modifications received after the closing time specified will not be accepted.

1.04 SUBMISSION OF PROPOSALS

All proposals shall be submitted on the proposal form, which is part of these specifications, returned in a sealed envelope addressed to the Director of Finance, 4 South Eagleville Road, Mansfield, Connecticut 06268. The envelope must bear the notation that it is a sealed bid, the Bid Name, and the vendor's name and address.

If any bidder contemplating submitting a proposal is in doubt as to the true meaning of any part of these specifications, he may submit requests for information and/or clarification in writing via e-mail to dpw@mansfieldct.org by July 5, 2016. No interpretations as to the meaning of the plans, specifications, or other Contract Documents shall be made to any bidder orally.

A bid will not be accepted if it is received at the Finance Department after the stated time of opening as shown on the bid proposal form. This applies to bids sent by mail as well as those hand delivered. Unsigned bids shall be rejected.

Certificates of Insurance are required and must be furnished by the Contractor prior to any work being performed. Certificates shall be submitted at the time of execution of the contract and must be acceptable to the Awarding Authority.

Purchases made by the Town are exempt from Fair Trade Laws as well as the payment of any sales, excise, or Federal Transportation taxes. Such taxes must not be included in the bid prices. Tax exemption certificates, for merchandise accepted by the Town, will be completed at the request of the Contractor furnishing the goods and services.

1.05 COST OF BID PREPARATION

The Town shall not reimburse the bidder for the cost of developing, presenting, or providing any response to this solicitation. Offers submitted for consideration should be prepared simply and economically, providing adequate information in a straightforward and concise manner.

1.06 FAMILIARITY WITH THE WORK

Each bidder is cautioned to examine the specifications, drawings, samples, etc. pertaining to the bid to fully acquaint himself with the exact existing conditions relating to the work and has fully informed himself as to the work involved and the difficulties and restrictions attending the performance of this bid. Failure on the part of the bidder to examine all pertinent documents samples or job areas shall not entitle him to any relief from the conditions imposed in the proposal, the specifications, and the contract. Unsigned bids or bids without an original signature will not be accepted.

At the time of the opening of bids each bidder shall be presumed to have inspected the work and to have read and to be thoroughly familiar with all of the Contract Documents (including addenda). The failure or omission of any Bidder to receive or examine any form, instruction or document shall in no way relieve any bidder from any obligation in respect to his bid.

1.07 ADDENDA AND INTERPRETATIONS

When a bidder desires an interpretation or clarification of any ambiguity in the bidding documents, he must contact the Director of Finance prior to the bid opening. The Director of Finance's interpretation shall be final and will be made known to all bidders concerned.

If any bidder contemplating submitting a proposal is in doubt as to the true meaning of any part of these specifications, he may submit requests for information and/or clarification in writing via e-mail to dpw@mansfieldct.org by July 5, 2016. No interpretations as to the meaning of the plans, specifications, or other Contract Documents shall be made to any bidder orally.

Addenda information will be available online at http://www.mansfieldct.gov. It is strongly suggested that bidders check for any addenda a minimum of forty-eight hours in advance of the bid deadline. Failure of any bidder to receive any such addendum or interpretations shall not relieve any bidder from any obligations under his bid as submitted. All addenda so issued shall become part of the Contract Documents. Oral explanations will not be binding on the Town.

1.08 SAMPLES

When samples are requested they shall be delivered by the bidder properly identified at the time at the bid opening unless the bidding document indicates a different time. Samples shall be submitted free of charge. Samples will be removed by the bidder at his expense. The Town will not be responsible for any samples which are destroyed or mutilated in examination. If samples are not removed within thirty (30) days after written notice to the Vendor, they shall be considered as abandoned and the Town shall have the right to dispose of them as its own property. The Director of Finance may, at his discretion, hold the sample or samples of the successful bidder or bidders, for comparison with articles delivered on the Purchase Order, or orders issued subsequent to the award.

1.09 ANTI-DISCRIMINATION

The Contractor agrees and warrants that in the performance of this Contract it will not discriminate or permit discrimination against any person or group of persons on the grounds of sex, race, color, religion, age marital status, ancestry, national origin, past history of mental disorder, mental retardation or physical disability or other basis in any manner prohibited by the laws of the United States, the State of Connecticut, or the Town of Mansfield.

1.10 APPLICABLE LAW

The Contract pursuant to this solicitation shall be governed by, and the Town and Contractor shall have all remedies all recorded each by the Uniform Commercial Code, as adopted in the State of Connecticut, except as otherwise provided in such Contract or in laws pertaining specifically to the Town. This Contract shall be governed by the laws of the State of Connecticut, and suits pertaining to this contract shall be brought only in federal or state courts in the State of Connecticut.

1.11 INTERPRETATION OF BIDS

Qualified bids are subject to rejection in whole or in part. A qualified bid is defined as one limiting or modifying any of the terms and conditions and/or specifications of the invitation to bid.

Bidders are cautioned to initial erasures, alterations or corrections. Failure to do so may result in rejection of bids.

Unless limited by the term no substitute, the use of the name of a manufacturer or of any particular make, model, or brand in describing an item, does not restrict bidders to that manufacturer or specific article, this means being used simply to indicate the character or quality of the article so described; but the article offered must be of such character and quality that it will serve the purpose for which it is to be used, equally as well as that specified, and shall be deemed by the Town to be so warranted by the bidder. Bids on comparable items must clearly slate the exact article being offered, and bidder shall furnish such other information concerning the article being offered as necessary to evaluate its acceptability for the purpose intended. If the bidder does not indicate that the article he offers is other than as specified, it will be understood that the bidder is offering the article exactly as specified.

The Director of Finance reserves the right to reject any or all bids, or the bid for any one or more commodities or contracted services included in any or all bids, to waive any Informality in bids and unless otherwise specified, to buy any part or the whole from one or more bidders when it is to the Town's best interest to do so.

1.12 INTERPERTATION – PAROL EVIDENCE

The contract pursuant to this solicitation is intended by the parties as a final expression of their agreement and is intended also as a complete and exclusive statement of the terms of such Contract. No course of prior dealings between the parties and no usage of the trade shall be relevant to supplement or explain any term used in the contract. Acceptance or acquiescence in

a course of performance rendered under the contract shall not be relevant to determine the meaning of the contract even though the accepting or acquiescing party had knowledge of the nature of this performance and opportunity to object.

1.13 DELIVERY

All prices bid must be on the basis of F.O.B. destination, inside delivery, unloaded and assembled unless otherwise indicated in the bidding documents. The contractor shall be responsible for all freight costs.

It shall be understood and agreed that any and all commodities furnished shall comply fully with all applicable O.S.H.A., and Federal and State laws and regulations.

Any equipment delivered must be standard new equipment, latest model, except as otherwise specifically stated in bidding documents. Where any part or nominal appurtenances of equipment are not described, it shall be understood that all the equipment and appurtenances which are usually provided in the manufacturer's stock model shall be furnished.

Delivery must be made as ordered and in accordance with the bidding documents. The decision of the Director of Public Works as to reasonable compliance with delivery terms shall be final. Burden of proof of delay in receipt of order shall rest with the Contractor.

Commodities shall be securely and properly packed for shipment according to accepted standard commercial practice, without extra charge for packing cases, bailing or sacks, the containers to remain the property of the Town unless otherwise stated in the bidding documents.

1.14 AWARD OF CONTRACT

Award will be made to the lowest responsible qualified bidder.

A Bidder, if requested, must be prepared to present evidence of experience, ability, service facilities and financial standing necessary to meet satisfactorily the requirements set forth or implied in the bid.

The Director of Finance reserves the right to reject the bid of any bidder In default of any prior contract or guilty of misrepresentation, or of any company having as its sales agent or representative, or member of the firm any individual in default or guilty of misrepresentation.

Each bid will be received, with the understanding that the acceptance in writing by the Director of Finance of the offer to furnish any or all of the commodities described there in, shall constitute a contract between the Bidder and the Town, which shall bind the Bidder on his part to furnish and deliver the commodities at the prices given and in accordance with conditions of said accepted bid and specifications.

No alterations or variations of the terms of the contract shall be valid or binding upon the Town unless made in writing and signed by the Director of Finance. The placing, in the mail to the address given in the bid or delivery of a notice of award to a bidder will constitute notice of acceptance of an oiler. When so requested by the Director of Finance, the Contractor shall

execute a formal contract with the Town for the complete performance specified therein. The contract may be terminated or annulled by the Director of Finance upon nonperformance of contract terms or failure of the Contractor to furnish performance surety and/or insurance certificates within ten (10) days from date of request. Any unfulfilled deliveries against such contract may be purchased from other sources at the Contractor's expense.

Failure of a Contractor to deliver within the time specified or within reasonable time as interpreted by the Director of Finance or failure to make replacements of rejected commodities when so requested, immediately or as directed by the Director of Finance, will constitute authority for the Director of Finance to purchase in the open market, the commodities to replace the commodities rejected or not delivered. The Director of Finance reserves the right to authorize immediate purchased in the open market against rejections on any contract when necessary. On all such purchases, the Contractor agrees promptly to reimburse the Town for excess costs occasioned by such purchases. Such purchases will be deducted from the contract quantities.

However, should public necessity demand it, the Town reserves the right to use or consume commodities delivered which are substandard in quality, subject to an adjustment in price to be determined by the Director of Finance.

1.15 BEST CUSTOMER PREFERENTIAL PRICING

The contractor shall reduce the contract price of any good or service for which a contract award is executed to an amount equal to or lower than any pricing offered to any other commercial customer or the general public. This reduction in price shall be applied when the goods or services are identical to those contracted for and quantities requested meet any minimum quantity requirements for such pricing.

1.16 CERTIFICATION

By signature of the proposer, the proposer certifies:

The submission of the offer did not involve collusion or other anticompetitive practices.

The proposer had not given, offered to give, not intends to give at any time hereafter, any economic opportunity, future employment, gift, loan, gratuity, special discount, trip, favor, or service to a public servant in connection with the submitted offer. Failure to provide a valid signature affirming the stipulations required by this clause shall result in the rejection of the offer. Signing the offer with a false statement shall void the offer, any resulting Contract and may be subjected to legal remedies by law.

The proposer submitting the offer hereby certifies that the Individual signing the offer and/or Contract is an authorized agent for the proposer and has the authority to bind the proposer to the contract.

1.17 CLAYTON ACT ASSIGNMENT OF RIGHTS

The Contractor and/or Subcontractor offers and agrees to assign to the Town of Mansfield all rights, responsibilities and interest in all causes of action it may have under Section 4 of the Clayton Act..15 U.S.C. Section 15, or under Connecticut General Statutes 35-24 et. seq., as amended, rising out of the purchase of services, property, or intangibles of any kind pursuant to the Agreement, or Subcontracts thereunder. This assignment shall be made and become effective at the time the Town awards or accepts such Agreement, without further acknowledgment by the parties. In the alternative, at the option of the Town, the Contractor and/or Subcontractor agrees to pay to the Town its proportionate share of recoveries for antitrust violations which relate to purchases pursuant to this Contract, or Subcontracts hereunder. The Contractor and/or Subcontractor agree promptly to notify the Director of Finance of the Town of Mansfield of suspected antitrust violations and claims.

1.18 CONTRACT

The contract pursuant to this solicitation shall be based upon the request for bid issued by the Town and the offer submitted by the Contractor in response to the request for bid. The offer shall substantially conform to the terms, conditions, specifications and other requirements set forth within the text of the request for bid. The Town reserves the right to clarify any contractual terms with the concurrence of the Contractor. However, any substantial nonconformity in the offer, as determined by the Town Director of Finance, shall be deemed nonresponsive and the offer rejected.

Such contract shall contain the entire agreement between the Town and the Contractor relating to this requirement and shall prevail over any and all previous Agreements, contract, proposals, negotiations, purchase orders or master Agreements in any form.

1.19 CONTRACT AMENDMENTS

The contract pursuant to this solicitation shall be modified only by a written contract amendment signed by the Town Director of Finance and persons duly authorized to enter into contracts on behalf of the Contractor.

1.20 GRATUITIES

The Town may, by written notice to the Contractor, cancel the contract if it is found that gratuities, in the form of entertainment, gifts or otherwise, were offered or given by the Contractor or any agent or representative or the Contractor, to any officer or employee or the Town amending, or the making of any determinations with respect to the performing of such contract. In the event this contract is canceled by the Town pursuant to this provision, the Town shall be entitled, in addition to any other rights and remedies, to recover or withhold from the Contractor the amount of the gratuity.

1.21 INSURANCE

The Contractor shall procure and maintain insurance against claims for injuries or losses to persons or property that are alleged to have arisen in connection with activities of the Contractor and any agents, representatives, subcontractors or employees. Insurance companies must be licensed by the State of Connecticut or otherwise acceptable to the Town. The cost of such insurance, including required endorsements or amendments, shall be the sole responsibility of the Contractor. Full disclosure of any non-standard exclusions is required for all required coverages.

The coverage indicated below at *not less than* the specified limits are required for this project (agreement):

A. Comprehensive General Liability coverage naming the TOWN OF MANSFIELD as additional insured, written on an occurrence basis: $1,000,000 per occurrence, $2,000,000 aggregate.

B. Automobile Liability coverage, including $1,000,000 coverage for hired or borrowed autos, $1,000,000 per accident-combined single limit.

C. Workers' Compensation Coverage, (as per Connecticut law and custom) and employer's liability coverage $100,000 each accident /$100,000 (disease, each employee) /$500,000 (disease, policy limit) limits or "Certificate of Solvency" issued by Connecticut Workers' Compensation Commission for self-insurers.

The required insurance form shall be certified by a duly authorized representative of the insurer(s) and incorporated into and made a part of this agreement. Properly executed certificates signifying adequate coverage in effect for the duration of the contract with renewal certificates issued not less than 30 days prior to expiration of a policy period, must be submitted with the bid on file with the Town prior to commencement of this project (agreement).

Insurance as required by the Town of Mansfield shall be furnished by the Contractor to the Town. The Town of Mansfield shall be listed as “also insured” by name on all insurance certifications. Failure of the Contractor to maintain all required insurance in accordance with the Contract shall constitute a material breach of the Contract and shall subject the Contractor the Town’s withholding liquidated damages from the Contractor in the amount of five percent (5%) of the total Contract price, as it may be amended by construction orders, subject to the continued commercial availability of such coverage.

The Contractor shall not commence work under this contract until he has obtained all the insurance required above of the Information for Bidders attached hereto and such insurance has been approved by the Town. The Contractor shall furnish the Town with certificates showing the type, amount, class of operations covered, effective dates, and dates of expiration of policies. Such certificates shall also contain substantially the following statements: "The insurance covered by this certificate will not be canceled or materially altered, except after ten (10) days written notice has been received by the Town." The Town of Mansfield shall be listed as “additional insured” by name on all such insurance certifications.

1.22 INDEMNIFICATION

The Bidder is aware of and agrees that, if awarded an Agreement, he is bound by the following indemnification language:

> To the fullest extent permitted by law, the Contractor shall release, defend, indemnify, and hold harmless the Town of Mansfield, their respective boards, commissions, officers, officials, employees, agents, representatives, and servants from any and all suits, claims, losses, damages, costs (Including without limitation reasonable attorneys' fees),compensation, penalties, fines, liabilities or judgments or any name or nature for:
>
> - Bodily injury, sickness, disease, or death; and/or
> - Damage to or destruction of property, real or personal; and/or
> - Financial losses (including, without limitation, those caused by loss of use)
>
> sustained by any person or concern, including officers, employees, agents, Subcontractors or servants of the Town, or the Contractor, or by the public, which is cause or alleged to have been caused in whole or in part by the negligent act(s) or omission(s) of the Contractor, its officers, employees, agents, or Subcontractors, in the performance of this Agreement or from the inaccuracy of any representation or warranty of the Contractor contained in the Contract Documents. This indemnity shall not be affected by other portions of the Agreement relating to insurance requirements.

To the fullest extent permitted by law, the Contractor agrees to release, defend, indemnify, and hold harmless the Town of Mansfield, their respective boards and commissions, officials, officers, employees, agents, representatives, and servants from any loss, claim, cost penalty, fine or damage that may arise out of the failure of the Contractor, its officers, agents, employees or Subcontractors to comply with any laws or regulations of the United States of America, the State of Connecticut, the Town of Mansfield, or their respective agencies. This undertaking shall not be affected by other portions of the Agreement relating to insurance requirements.

1.23 LAW OF WAIVER

Any breach of contract which the Town does not object to shall not operate as a waiver of the Town to seek remedies available to it for any subsequent breach.

1.24 LICENSES

Contractor shall maintain in current status all federal, state, and local licenses and permits required for the operation of the business conducted by the Contractor as applicable to this contract.

1.25 PUBLIC RECORD

All proposals submitted in response to this request shall become the property of the Town and shall become a matter of public record available for review subsequent to the award notification.

1.26 PROPERTY TAX ASSESSMENT

All owners of real estate, or of tangible personal property located in any town for three months or more during the assessment year immediately preceding any assessment day, who are nonresidents of such town, shall file lists of such real estate and personal property with the assessors of the town in which the same is located on such assessment day, if located in such town for three months or more in such year, otherwise, in the town in which such property is located for the three months or more in such year nearest to such assessment day, under the same provisions as apply to residents, and such personal property shall not be liable to taxation in any other town in this state. The list of each nonresident taxpayer shall contain his post-office and street address. The assessors shall mail to each nonresident, or to his attorney or agent having custody of his taxable property, at least fifteen days before the expiration of the time for filing lists, blank forms for filing lists of such property. The lists of taxable property of nonresidents shall be arranged in alphabetical order and separate from the lists of residents, provided no such separation shall be necessary in any town the board of assessors of which, upon the request of its property tax collector, has made rules and regulations approved of the secretary of the office of policy and management setting up an alternative method of arrangement.

1.27 PROVISIONS REQUIRED BY LAW

Each and every provision of law and any clause required by law to be in the contract shall be read and enforced as though it were included herein, and if through mistake or otherwise any such provision is not inserted, or is not correctly inserted, then upon the application of either party the contract shall forthwith be physically amended to make such insertion or correction.

1.28 RELATIONSHIP OF PARTIES

It is clearly understood that each party shall act in its own individual capacity and not as an agent, employee, partner, joint venture, or associate of the other. An employee or agent of one party shall not be deemed or construed to be the employee or agent of the other party for any purpose whatsoever. The Contractor is advised that taxes or social security payments shall not be withheld from a Town payment issued hereunder and that Contractor should make arrangements to directly pay such expenses, if any. The Contractor understands that it is not entitled to compensation in the form of salaries, or to paid vacation or sick days by the Town. The Contractor further understands that the Town shall not provide any insurance coverage to the Contractor, including workmen's compensation coverage.

1.29 RIGHTS AND REMEDIES

No provision in these solicitation documents or in the proposer’s bid shall be construed, expressly or by implication as a waiver by either party of any existing or future right and/or remedy available by law in the event of any claim of default or breach of contract. The failure of either party to insist upon the strict performance of any term or condition of the contract or to exercise or delay the exercise of any right or remedy provided in the contract, or by law, or the acceptance of

materials or services, obligations imposed by this contract or by law, and shall not be deeded a waiver of any right of either party to insist upon the strict performance of the contract.

1.30 SEVERABILITY

The provisions of this contract are severable to the extent that any provision or application held to be invalid shall not affect any other provision or application of the contract which may remain in effect without the invalid provision or application.

1.31 SUBCONTRACTS

No subcontract shall be entered into by the Contractor with any other party to furnish any of the material/service specified herein without the advance written approval of the Town's Director of Finance. All subcontracts shall comply with federal and state laws and regulations which are applicable to the services covered by the subcontract and shall include all the terms and conditions set forth herein which shall apply with equal force to the subcontract, as if the subcontractor were the Contractor referred to herein. The Contractor is responsible for contract performance whether or not subcontractors are used. The Town shall not unreasonably withhold approval and shall notify the Contractor of the Town's position within a reasonable period of time.

1.32 SUBMISSION OF INVOICES

The following provisions regarding submission of invoices are an integral part of these bidding documents, and as such, will create a contractual obligation on the part of the awarded vendor. Failure to comply with these contractual requirements may result in a breach of contract:

All invoices submitted to the Town of Mansfield for goods or services shall contain the following minimum information:

- Town Order Number.
- Complete description and quantity of goods and services rendered.
- Agency and name of individual requesting goods or rendering of services.
- Complete price information including gross amount, discount if applicable, net amount and itemization of labor charges if applicable.
- Additional information as may be required by contract.

All invoices must be forwarded to the Town Department to whom goods and services were rendered.

1.33 TOXIC SUBSTANCES

In accordance with section 31-40 of the General statutes of Connecticut any person who supplies any toxic substance as defined in 31·40 shall provide the following information:

1) The generic or basic chemical name of the toxic substance;
2) The level at which exposure to the substance is determined to be hazardous, if known;
3) The acute and chronic effects of exposure of hazardous levels;

4) The symptoms of such effects;
5) Appropriate emergency treatment;
6) Proper conditions for safe use and exposure to such toxic substance;
7) Procedures for cleanup of leaks and spills of such toxic substance; and
8) A label on each container of any such substance which states, in a clearly legible and conspicuous form, that a toxic substance is contained therein.

This information shall be disclosed at the time of the bid opening and chemical data sheets will also be required if the products meet the toxic substance criteria.

1.34 VENDOR WARRANTY

Vendor hereby agrees to:

a. Perform contract in accordance with the specifications and bid under which the contract was awarded.
b. Warranty the products or services against defective material or workmanship and to repair or replace any damage or marring of products occasioned in transit.
c. Furnish adequate protection from damage for all work and to repair damages of any kind, for which he or his workmen are responsible, to the premises or equipment, to his own work or to the work of other contractors.
d. Indemnify and hold harmless the Town, its agencies, agents, offices, servants or employees from any action, law suit or judgment arising out of detects in its products, materials or workmanship, negligence in its activities or breach of its agreement with the Town, including the cost of defense and counsel fees.

Articles which in any respect fail to conform to the specifications upon which the award is made will be rejected and held subject to the Bidder's disposition and expense.

TOWN OF MANSFIELD
MANSFIELD, CONNECTICUT 06268
BID PROPOSAL

Removal and Relocation of a Decorative Sidewalk Light
Mansfield Public Works Department

BID OPENING: 2:00 p.m., Thursday, July 14, 2016

Office of the Director of Finance, 4 South Eagleville Road, Mansfield, Connecticut 06268.

TO: Cherie A. Trahan
Director of Finance
Town of Mansfield
4 South Eagleville Road
Mansfield, Connecticut 06268

The undersigned, as bidder, agrees to remove and relocate a decorative sidewalk light as specified herein and the Contractor declares that he has carefully examined the Specifications, Form of Contract, and the site of the work and he proposes and agrees that, if this Proposal is accepted, he will contract with the Town in accordance with the copy of the Contract Documents; this Proposal Form and Specifications being part of and included in a copy of said documents, to provide all necessary equipment and services to do all the work as specified in the Contract in the manner therein prescribed, and that he will take in full payment for the work, the unit or lump sum price applicable to that stated in the schedule below.

FIRM: _____
Name

_____
Street

_____
City, State, Zip Code

NAME: _____
Printed Name

TELEPHONE NUMBER: _____

FAX NUMBER: _____

EMAIL ADDRESS: _____

SIGNED: _____

DATE: _____

The Contractor proposes to furnish all labor, materials, and equipment, and all else whatsoever required to perform all work described in the contract bidding documents for the "Removal and Relocation of a Decorative Sidewalk Light" as amended by the addendum noted below for the amounts shown herein under Schedule of Bids.

Addendum No._____ Dated:_____

Addendum No._____ Dated:_____

Addendum No._____ Dated:_____

Addendum No._____ Dated:_____

It is understood and agreed that the Owner has the privilege of rejecting any or all Bids and of waiving informality in any bid.

It is further understood and agreed that this bid shall be irrevocable for ninety (90) calendar days after bid receipt date.

SCHEDULE OF BID

NOTE: All prices must be clearly written, in ink or typed, in words as well as figures, for the entire Bid. In the event of a discrepancy between the unit price in words and unit price in figures, the written unit price in words shall govern.

ITEM 1: REMOVE AND RELOCATE DECORATIVE LIGHT: Bidder agrees to perform all of the work described in the Instruction to Bidders, Specifications, and as shown on the Plans for the Removal and Relocation of a Decorative Light at the Intersection of Storrs Road (Rt. 195) and South Eagleville Road (Rt. 275) for the lump sum of:

_____Dollars and _____ Cents
(Words)

$_____
(Numbers)

CONTRACT TIME

The Bidder hereby agrees to commence work under this contract on or before a date to be fixed in the written "Notice to Proceed" given by the Town to the Contractor and to fully complete all work related to the Contract by September 30, 2016.

BIDDER QUALIFICATIONS

If the Bidder is a Corporation, fill out:

The Bidder is a Corporation, organized under the laws of _____, having its principal office at _____. The Principal Officers of said Corporation, with their titles and addresses, are as follows:

_____

_____

_____

The Bidder is required to state that he has done work on a similar character to that included in the proposed Contract, and give references that will enable the Owner to judge his experience, ability to meet completion date, skill, and business standing. The Bidder is required to complete Attachment D – Summary of Work Experience and submit with their proposal.

CERTIFICATE OF INSURANCE

The Bidder is required to submit a Certificate of Insurance in amounts and types specified in Attachment A and shall obtain and maintain insurance through the duration of the Contract.

CONTRACT FORM

The parties shall enter into a contract in substantially the same form as the attached subject to technical and other modifications as the parties mutually agree.

ANTI-COLLUSION

No person or persons other than those named herein are interested in this Bid or in the Contract proposed to be taken. Said contract is made without any connection with any other person or persons making any bid for the same work and is in all respects and without collusion or fraud. The Bidder is required to complete Attachment C – Certification of Non-Collusion and submit with their proposal.

ANTI-DISCRIMINATON

The Contractor agrees and warrants that in the performance of this Contract it will not discriminate or permit discrimination against any person or group of persons on the grounds of sex, race, color, religion, age marital status, ancestry, national origin, past history of mental disorder, mental retardation or physical disability or other basis in any manner prohibited by the laws of the United States, the State of Connecticut, or the Town of Mansfield.

SUPERVISION

The Contractor shall employ full time on-the-job Project Superintendent as his representative.

CLAYTON ACT ASSIGNMENT OF RIGHTS

The Contractor and/or Subcontractor offers and agrees to assign to the Town of Mansfield all rights, responsibilities and interest in all causes of action it may have under Section 4 of the Clayton Act..15 U.S.C. Section 15, or under Connecticut General Statutes 35-24 et. seq., as amended, rising out of the purchase of services, property, or intangibles of any kind pursuant to the Agreement, or Subcontracts thereunder. This assignment shall be made and become effective at the time the Town awards or accepts such Agreement, without further acknowledgment by the parties. In the alternative, at the option of the Town, the Contractor and/or Subcontractor agrees to pay to the Town its proportionate share of recoveries for antitrust violations which relate to purchases pursuant to this Contract, or Subcontracts hereunder. The Contractor and/or Subcontractor agree promptly to notify the Director of Finance of the Town of Mansfield of suspected antitrust violations and claims.

INDEMNIFICATION

The Bidder is aware of and agrees that, if awarded an Agreement, he is bound by the following indemnification language:

> To the fullest extent permitted by law, the Contractor shall release, defend, indemnify, and hold harmless the Town of Mansfield, their respective boards, commissions, officers, officials, employees, agents, representatives, and servants from any and all suits, claims, losses, damages, costs (Including without limitation reasonable attorneys' fees),compensation, penalties, fines, liabilities or judgments or any name or nature for:
>
> - Bodily injury, sickness, disease, or death; and/or
> - Damage to or destruction of property, real or personal; and/or
> - Financial losses (including, without limitation, those caused by loss of use)
>
> sustained by any person or concern, including officers, employees, agents, Subcontractors or servants of the Town, or the Contractor, or by the public, which is cause or alleged to have been caused in whole or in part by the negligent act(s) or omission(s) of the Contractor, its officers, employees, agents, or Subcontractors, in the performance of this Agreement or from the inaccuracy of any representation or warranty of the Contractor contained in the Contract Documents. This indemnity shall not be affected by other portions of the Agreement relating to insurance requirements.

To the fullest extent permitted by law, the Contractor agrees to release, defend, indemnify, and hold harmless the Town of Mansfield, their respective boards and commissions, officials, officers, employees, agents, representatives, and servants from any loss, claim, cost penalty, fine or damage that may arise out of the failure of the Contractor, its officers, agents, employees or Subcontractors to comply with any laws or regulations of the United States of America, the State of Connecticut, the Town of Mansfield, or their respective agencies. This undertaking shall not be affected by other portions of the Agreement relating to insurance requirements.

DEBARMENT

The bidder further certifies under penalty of perjury that the said undersigned is not presently debarred from doing public construction work in the State of Connecticut under applicable debarment provisions of the Connecticut General Statutes or any rule of regulations promulgated thereunder.

BIDDER:

_____
COMPANY

_____
SIGNATURE BY DULY AUTHORIZED (SEAL)

_____
PRINT OR TYPE NAME

_____
TITLE

_____
DATE

_____
ADDRESS

_____
TELEPHONE

_____
FAX

_____
EMAIL ADDRESS

_____
VENDOR FEIN

ATTACHMENT A
INSURANCE REQUIREMENTS

INSURANCE REQUIREMENTS FOR CONTRACTORS

Minimum Limits of Liability

Workers Compensation		**Statutory**
Employer's Liability –	each accident	$ 100,000
	Disease, each employee	$ 100,000
	Disease, policy limit	$ 500,000

Commercial General Liability Insurance

Each Occurrence	$ 1,000,000
Fire Damage	$ 100,000
Medical Expense	$ 5,000
Personal & Adv. Injury	$ 1,000,000
General Aggregate	$ 2,000,000
Products & Completed Operations Agg.	$ 2,000,000

Business Automobile Liability Insurance

Owned, Non-Owned & Hired Auto Limit	$ 1,000,000
Combined Bodily Injury & Property Damage (each accident)	$ 1,000,000
Property Insurance – if applicable	
Special Risk including Theft	
$1,000 Deductible	

Certificates of insurance must be provided to the Town after being awarded the contract and before doing any work. All insurance shall be provided by companies lawfully authorized to do business in the State of Connecticut with an A.M. Best Rating of A-VII or better. The Town of Mansfield shall be named as an additional insured on the General Liability, Automobile Liability and Excess Liability (if needed) insurance policies.

Each policy of insurance shall include a waiver of subrogation in favor of the Town of Mansfield and shall provide no less than thirty (30) days' notice to the Town in the event of a cancellation or change in conditions or amounts of coverage.

ATTACHMENT B
QUESTIONNAIRE CONCERNING OCCUPATIONAL HEALTH & SAFETY

Town of Mansfield
Department of Public Works
QUESTIONNAIRE CONCERNING OCCUPATIONAL HEALTH AND SAFETY

The Town of Mansfield is a political subdivision of the State of Connecticut and it is required by various state statutes and regulations and by its own Town Code of Ordinances to obtain background information on prospective contractors prior to entering into a contract. The questions below are designed to assist the Town of Mansfield in procuring this information.

	Yes	No
1. Has the Bidder been cited for three or more willful or serious violations of any occupational safety and health act?	☐	☐
2. Has the Bidder received one or more criminal convictions related to the injury or death of any employee in the three-year period preceding the issuance of this Request For Bids/Proposals/Qualifications?	☐	☐
3. Has the Bidder been the recipient of one or more ethical violations from the State of Connecticut Ethics Commission during the three-year period preceding the issuance of this Request For Bids/Proposals/Qualifications?	☐	☐
4. The Bidder shall provide three (3) References for work completed within the last five (5) years.		
4a. Designer/Owner Contact Name Work Description	Contract Value ($) Phone No	
4b. Designer/Owner Contact Name Work Description	Contract Value ($) Phone No	
4c. Designer/Owner Contact Name Work Description	Contract Value ($) Phone No	

ATTACHMENT C
CERTIFICATION OF NON-COLLUSION

CERTIFICATION OF NON-COLLUSION

The Undersigned certifies, under penalties of perjury:

That this Proposal has been made by the Proposer independently, and has been submitted without collusion, and without any agreement, understanding, or planned common course of action with any other vendor of materials, supplies, equipment, or services described in this procurement document, designed to limit independent bidding or competition;

That the contents of the proposal have not been communicated by the Proposer or it's employees or agents to any person not an employee or agent of the Proposer or it's surety or any bond furnished with the proposal, and will not be communicated to any such person prior to the official awarding of this procurement.

That I have fully informed myself regarding the accuracy of the statement made in the certificate.

SIGNATURE: _____

NAME: _____

FIRM: _____

TITLE: _____

DATE: _____

ATTACHMENT D
SUMMARY OF WORK EXPERIENCE

SUMMARY OF WORK EXPERIENCE

The Bidder is further required to state in the spaces provided below work that the Bidder has performed of a similar character to the work described in the Contract Bidding Documents.

Project Name	Project Description	Contract Award Amount	Client	Contact Person	Telephone #
1.					
2.					
3.					

TECHNICAL SPECIFICIATIONS

Removal and Relocation of a Decorative Sidewalk Light
Mansfield Department of Public Works

Concrete Sidewalks

Description
This item shall consist of concrete sidewalks constructed on a gravel or reclaimed miscellaneous aggregate base course in the locations and to the dimensions and details shown on the plans or as ordered and in accordance with these specifications.

Materials
Materials for this work shall conform to the requirements of Article M.03.01 for Class "C" Concrete. Air-entraining Portland cement and air-entraining admixtures shall conform to Article M.03.01 Gravel or reclaimed miscellaneous aggregate for base shall conform to Article M.02.01 for granular fill. The concrete sidewalk constructed as a pad adjacent to a traffic control foundation, shall conform to the requirements of Article M.03.01 for Class "A" Concrete.

Construction Methods

1. **Excavation:** Excavation, including removal of any existing sidewalk, shall be made to the required depths below the finished grade, as shown on the plans or as directed. All soft and yielding material shall be removed and replaced with suitable material. When connecting new concrete sidewalk to a section of existing concrete sidewalk, the connection point shall be at the nearest joint in the existing sidewalk.
2. **Gravel or Reclaimed Miscellaneous Aggregate Base:** The gravel or reclaimed miscellaneous aggregate base shall be placed in layers not over 6 inches (150 millimeters) in depth and to such a depth that after compaction it shall be at the specified depth below the finished grade of the walk. The base shall be wetted and rolled or tamped after the spreading of each layer.
3. **Forms:** Forms shall be of metal or wood, straight, free from warp and of sufficient strength to resist springing from the pressure of the concrete. If made of wood, they shall be of 2-inch (38-millimeter) surfaced plank except that at sharp curves thinner material may be used. If made of metal, they shall be of approved section and shall have a flat surface on the top. Forms shall be of a depth equal to the depth of the sidewalk. Forms shall be securely staked, braced and held firmly to the required line and grade and shall be sufficiently tight to prevent leakage of mortar. All forms shall be cleaned and oiled or wetted before concrete is placed against them. Sheet metal templates 1/8 inch (3 millimeters) in thickness, of the full depth and width of the walk, shall be spaced at intervals of 12 feet (4 meters) or as directed. If the concrete is placed in alternate sections, these templates shall remain in place until concrete has been placed on both sides of the template. As soon as the concrete has obtained its initial set, the templates shall be removed.
4. **Concrete:** The concrete shall be proportioned, mixed, placed, etc., in accordance with the provisions of Section 6.01 for Class "C" Concrete, except as modified herein. The concrete shall contain not less than 5% or more than 7% entrained air at the time the concrete is deposited in the forms. Air-entrainment shall be obtained and the concrete cured in accordance with the provisions of Article 4.01.03 for concrete Pavement.
5. **Finishing:** The surface of the concrete shall be finished with a wood float or by other approved means. The outside edges of the slab and all joints shall be edged with a 1/4-inch (6-millimeter)

radius edging tool. Each slab shall be divided into two or more sections by forming dummy joints with a jointing tool as directed.

6. **Backfilling and Removal of Surplus Material:** The sides of the sidewalk shall be backfilled with suitable material thoroughly compacted and finished flush with the top of the sidewalk. All surplus material shall be removed and the site left in a neat and presentable condition to the satisfaction of the Engineer.

Decorative Concrete Pavement

Concrete sidewalks and roadway medians with decorative concrete pavement shall be constructed in accordance with Article 9.21, supplemented as follows:

Description

The decorative concrete pavement item shall consist of colored concrete pavement utilizing Integral Color additive and imprinting tools to create textures and/or patterns within the sidewalk system. The mountable decorative concrete median item shall consist of colored concrete pavement utilizing Integral Color additive and imprinting tools to create textures and/or patterns within the roadway.

Materials

1. **Supporting Structure:**
    a. Mix Design:
        i. Mix and deliver concrete in accordance with ASTM C94, Alternate 2. Refer to Drawings for concrete strength requirements.
        ii. Use accelerating admixtures containing no calcium chloride in cold weather only when approved by testing laboratory. Use of admixtures will not relax cold weather placement requirements.
        iii. Use set retarding admixtures during hot weather only when approved by testing laboratory.
        iv. Add air entraining agent to concrete mix for concrete work exposed to exterior, in amounts of 4 to 7 percent of total concrete volume or as otherwise recommended by testing laboratory.
        v. Add coloring admixture where scheduled in quantities recommended by coloring admixture manufacturer to achieve selected color.
        vi. Add polypropylene fiber reinforcement at point of concrete batching at rate scheduled.
        vii. Maintain water cement ratio to produce a minimum of 3 to maximum of 5 inch slump.
        viii. Use of calcium chloride is strictly prohibited.

    b. Subbgrade:
        i. Refer to DOT Form 816 Section 2.09 for subgrade preparation.
        ii. Refer to drawings for scope of subgrade preparation.

    c. Reinforcement:
        i. Fiber Reinforcement: ASTM C948, collated, fibrillated, 3/4 inch (19 mm) long virgin polypropylene fibers, equal to BOMANITE Fibers by The Bomanite Company.

ii. Reinforcing Steel: ASTM A615; Grade 60; deformed billet steel bars, uncoated finish.

iii. Welded Steel Wire Fabric: Plain type, ANSI/ASTM A185; in flat sheets; uncoated finish.

2. Color:

a. Integral Color:

i. Integral Coloring Admixture: Integral Color by The Bomanite Company, synthetic oxide pigment, meeting ASTM C979 and C494.

a. Type A, cement dispersing/water reducing.

b. Type D, set retarding/water reducing.

3. Tools Selection:

a. Imprinting Tools:

i. Mat type imprinting tools for texturing freshly placed concrete, in pattern/texture as selected by Architect or as scheduled.

ii. Imprinting tools used in the execution of this project shall be manufactured by The Bomanite Company.

b. Bomanite Patterns: Design(s) as scheduled. Refer to Drawings.

4. Cure Agent:

a. Membrane Color Cure: Color(s) as scheduled. Refer to Drawings.

i. Curing Compound: Meeting ASTM C309, water based emulsion.

a. BOMANITE Clear Cure Matte Finish by The Bomanite Company.

5. Sealing and Finish Coatings:

a. Hydrolock by The Bomanite Company.

6. Joints:

a. Sealer: Sikaflex 1C SL or approved equal. Color shall match concrete.

b. Expansion Joint: Shall consist of resilient premoulded bituminous impregnated cane fiber board with core stock weighing not more than 16 lbs per cubic foot, and with 35-50 percent asphalt content by weight.

c. Dowels: 2’ long - #4 dowel

d. Sleeve: 1’ long - sleeve for a #4 dowel

Construction Methods

Inspection

a. Verify compacted subgrade is ready to support paving and imposed loads, free of frost, smooth and properly compacted.

b. Verify gradients and elevations of base are correct, and proper drainage has been provided so water does not stand in the area to receive paving.

c. Beginning of installation means acceptance of existing conditions.

Preparation

a. If vapor retarding membrane is not used, moisten base to minimize absorption of water from fresh concrete.

b. Notify Architect and testing laboratory, minimum 24 hours prior to commencement of concreting operations.

Forming

a. Construct and remove forms in accordance with ACI 347.

b. Place and secure forms to correct location, dimension, and profile. Adequately brace to withstand loads applied during concrete placement.

c. Assemble formwork to permit easy stripping and dismantling without damaging concrete.

d. Place joint fillers vertical in position, in straight lines. Secure to formwork during concrete placement.

Inserts and Accessories

a. Make provisions for installation of inserts, accessories, anchors, and sleeves.
b. Place vapor retarder continuously over subgrade. Overlap joints a minimum of 12 inches (305 mm) and seal with a joint tape of same permeance as sheeting material.

Reinforcement

a. Accurately place reinforcement in middle of slabs-on-grade.
b. Discontinue every other bar of reinforcement at control and expansion joints.
c. Place reinforcement to achieve slab and curb alignment as detailed.
d. Steel shall be free of rust, mill scale, dirt and oil.
e. Provide doweled joints at interruptions of concrete with one end of dowel set in capped sleeve to allow longitudinal movement. Provide support at both ends of dowels.
f. Support reinforcing on bar chairs. Securely saddle tie at intersections. Rigidly secure in place to minimize displacement during concrete pour.

Joints

a. Intentional stoppage of concrete placing shall be at planned location of either an expansion joint or contraction joint.
b. When stoppage occurs at an expansion joint, install joint assembly with a bulkhead of sufficient section drilled to accommodate required dowels. Provide expansion joints at maximum 40 feet (12 m) o.c.e.w. in parking lots, 40 feet (12 m) o.c. for curbs and maximum 20 feet (6 m) o.c.e.w. at pedestrian paving.
c. When stoppage occurs at a contraction joint, install sheet metal joint assembly of sufficient section to prevent deflection, shaped to concrete section. Drill bulkhead to permit continuation of longitudinal reinforcing steel through construction joint.
d. Stoppage at Unintentional Location:
    i. Immediately upon unintended stoppage of concrete placing, place available concrete to a line and install bulkhead perpendicular to surface of pavement and at required elevation. Place and finish concrete to this bulkhead. Remove and dispose of concrete remaining on subgrade ahead of bulkhead.
    ii. When placing of concrete is resumed before concrete has set to extent that concrete will stand on removal of bulkhead, new concrete shall be rodded with the first; otherwise, carefully preserve joint face.
    iii. Provide a joint seal space at edges created by a construction joint of this type shall have a joint seal space as detailed on Drawings.
e. Provide sawed contraction joints in vehicular paving and curbs spaced as detailed on Drawings, but in no case greater than 20 feet (6 m) o.c. spacing.
    i. Saw joints after completion of finishing operations as soon as concrete has hardened to extent necessary to prevent revealing of joint or damage to adjacent concrete surfaces.
    ii. Saw joints same day that concrete is placed except that sawing of joints in concrete placed late in day may be delayed until morning of following day.
    iii. In any event, saw joints within 18 hours after placing concrete.
    iv. Use a power-driven concrete saw made especially for sawing concrete and maintain in good operating condition.
    v. Saw cut shall be to a depth equal to 1/4 of slab thickness, minimum one inch (25 mm) depth.
    vi. Align joints in vehicular paving with joints in adjacent pedestrian paving.

vii. Cut joints through curbs at right angles to back of curb.

f. Place joint filler between paving components and building or other appurtenances.

g. Provide scored joints in sidewalks and plazas to a depth of 1/4 the slab thickness, and at intervals as indicated, but in no case spaced greater than width of walk.

Placing Concrete

a. Place concrete in accordance with ACI 301, 302, and 304. Deposit concrete so that specified slab thickness will be obtained after vibrating and finishing operations. Minimize handling to prevent segregation. Consolidate concrete by suitable means to prevent formation of voids or honeycombs. Exercise care to prevent disturbance of forms and reinforcing and damage to vapor retarder. Place concrete to lines and levels shown, properly sloped to drain as designed.

   i. Hot Weather Placement: ACI 305.

   ii. Cold Weather Placement: ACI 306.

   iii. Ensure reinforcement, inserts, embedded parts, and formed joints are not disturbed during concrete placement.

   iv. Place concrete continuously between predetermined construction joints. Do not break or interrupt successive pours such that cold joints occur.

b. After consolidating and screeding, float concrete to gradients indicated. Use a straight edge to level and test surface in longitudinal direction to required grade. Finish edges to provide a smooth dense surface with 1/8 inch (3 mm) radius.

c. While concrete is still in its plastic state, apply the tool/texture pattern to the surface of the concrete. Properly tamp tools into the surface to achieve the required texture, with uniformity of pattern and depth of stamping. Utilize bond breaker to keep tools from sticking to fresh concrete.

   i. Release material shall be applied to the troweled surface prior to imprinting.

d. Place curing compound on exposed concrete surfaces immediately after finishing. Apply in accordance with manufacturer's instructions.

e. Apply finish sealer per approved mock-up or as specified to achieve design required.

Field Quality Control

a. Field inspection and testing will be performed under provisions of DOT Form 816 Section 1.06.

b. Maintain records of placed concrete items. Record date, location of pour, quantity, air temperature, and test samples taken.

Protection

a. Immediately after placement, protect concrete under provisions of DOT Form 816 Section 1.07 from premature drying, excessive hot or cold temperatures, and mechanical injury.

Decorative Bituminous Concrete

Description

A. Decorative bituminous concrete shall consist of an imprint product consisting of a hot applied polymer modified synthetic asphalt compound incorporating graded sand and granite aggregates, reinforced with two types of fibers.

B. Decorative bituminous concrete is applied over pavement substrates to create functional and decorative crosswalks, and intersections, as shown on the Contract Drawings.

C. All decorative bituminous concrete materials shall be produced under a quality system in accordance with ISO 9000 series, and designed to provide durability, load carrying capacity

and architectural compatibility with the environment. All raw materials shall be carefully graded for consistency and quality to obtain the highest standards.

D. Decorative bituminous concrete shall be installed flush and level with the existing surface.
E. Only Accredited decorative bituminous concrete Installers authorized by the manufacturers of the decorative bituminous concrete product may perform this work.
F. The removal of the existing decorative concrete shall be considered incidental to the project.

Definitions

A. "HMA pavement" is Hot Mix Asphalt pavement.
B. "PCC pavement" is Portland Cement Concrete pavement.
C. "Owner" means the Owner and refers to the representative person of the Town of Mansfield who has decision making authority for the Work.
D. "Accredited decorative bituminous concrete Installer" refers to a contractor authorized by the decorative bituminous concrete manufacturer to install the decorative bituminous concrete product.

Submittals

A. The Accredited decorative bituminous concrete Installer shall provide written proof of their Accreditation.
B. The Accredited decorative bituminous concrete Installer shall gain confirmation of correct stamping pattern(s) and colors from the Owner prior to starting the Work.
C. The construction of mock-ups shall be a minimum of a 6'x6' section for each color and stamp pattern specified.

Materials

Decorative Bituminous Concrete Material

Decorative bituminous concrete material is a surfacing material comprising a synthetic bitumen mixed with 25% to 50% filler and 30% to 40% aggregate, wherein said synthetic bitumen comprises from about 5% to about 20% binder resin, from about 1% to about 5% polymer, from about 1% to about 5% plasticizer, from about 0% to 5% pigment, from about 0% to 2% reinforcing fiber and from about 0% to 1% rheology modifier.

Sand

The sand is to be US mesh # 35 silica sand applied as a surface treatment on the decorative bituminous concrete material.

Particle Size Distribution:

Aperture size (microns)	US mesh size	Wt. % retained
1000	#18	0.1
710	#25	3.0
500	#35	27.5
355	#45	47.5
250	#60	19.3
180	#80	2.1
125	#125	0.4
90	#170	0.1
63	#230	Trace
-63		Trace

The sand is to be completely dry.

Decorative Bituminous Concrete Grade Selection

The Accredited decorative bituminous concrete Installer will select the proper grade of decorative bituminous concrete material best suited for the project.

Patterns and Colors

A. Crosswalks:
   1. Pattern "Running Bond Brick" in the color "Burnt Red".
   2. Pattern "6 inch x 6 inch Square" in the color "Burnt Red".
B. Intersection Treatment (non-crosswalk areas):
   1. Pattern: "6 inch x 6 inch Square" in the color "Stone".

Shelf Life and Storage

The shelf life of decorative bituminous concrete is one year providing it is protected from the weather, specifically UV degradation and rain. The materials are to be stored in their original packaging and kept dry under cover.

Material Usage

Thickness	Kilos per m²	Lbs per ft²	m² per tonne*	ft² per tonne*
0.6 in. (15mm)	37.0	7.58	27	290
0.8 in. (20 mm)	47.6	9.75	21	226
1.0 in (25 mm)	58.8	12.04	17	183

*tonne = 1,000 kg or 2,200 lbs.
Allow approx. +5% waste

Construction Methods

Pre-Conditions

Decorative bituminous concrete shall be installed over new pavement. The pavement must be firm, stable and in excellent condition; it must be free from defects such as cracks, settlement, visible seams, ruts, bird baths and spalling.

A. Cracking, settlement and other deficiencies of the substrate will likely reflect through the decorative bituminous concrete. Good and proper construction procedures for the installation of the substrate must be followed in order to mitigate cracking of decorative bituminous concrete.
B. Surfaces with a high degree of porosity should be avoided due to the problems associated with entrapped water.
C. Surfaces that may be subject to uncontrolled movement in either a horizontal or vertical direction shall be avoided as there may be a risk of reflective cracking through to the decorative bituminous concrete surface. Notify the engineer if these conditions are present before installing decorative bituminous concrete.
D. A skid resistance of 40 or less will require the pavement surface to be roughened and a primer applied.

Preparation of the Substrate

All pavement substrates must be of high quality and stable for the installation of decorative bituminous concrete.

This Section is to be used as a guide to ensure a high quality pavement substrate is provided and ready for the installation of decorative bituminous concrete. It does not supersede other specifications pertaining to this Work, nor does it replace recommendations made by the engineer of record for this Work.

A. The base and sub-grade over which new pavement is installed must be firm and stable.
B. The pavement mix must be designed for the intended use.
C. The pavement must be installed in accordance with proper placement practices and these specifications.
D. PCC pavement must be permitted to cure properly before installing decorative bituminous concrete.
E. PCC pavement is to be treated with Thermobond primer prior to installation of decorative bituminous concrete. The primer must dry before installing decorative bituminous concrete. Thermobond primer is available to Accredited Installers and Manufactures.
F. For new HMA pavement substrates, it is recommended that the surface be opened to traffic for a period of time prior to installation of decorative bituminous concrete in order to provide further compaction of the asphalt and to allow the asphalt oils to "cure" out. Bituminous residue must be removed from new HMA pavement surface prior to installation of decorative bituminous concrete.
G. Older HMA pavements that show signs of oxidization will require the application of Thermobond primer prior to the installation of decorative bituminous concrete.

Full Milling of Pavement for Flush Installations

The installation area boundaries shall be saw-cut prior to excavating the pavement materials for a clean straight, full depth edge. All pavement materials shall be milled and all excess material removed. The depth of the milled area shall allow the depth of the decorative bituminous concrete material to be maintained within a range of 0.6" to 0.8" depth across the entire installation. The existing pavement must be free of cracks. The milling process will not necessarily remove existing pavement cracks.

Surface Restoration

The pavement surface shall be dry and clean: free of all dirt, debris, salts, concrete admixtures and any chemical residues.

A. Bituminous residue must be removed from new HMA pavement surface prior to installation of decorative bituminous concrete.
B. Removal of contaminants may be done by brooming, compressed air, pressure washing or if necessary light-grit blasting. Wire brush may be used to remove loose or powdery materials.
C. Surfaces with a high degree of porosity require a primer before decorative bituminous concrete is installed. Thermobond Primer available from decorative bituminous concrete manufacturer is the recommended primer.

Installation of Decorative Bituminous Concrete

Decorative bituminous concrete is to be installed only by an Accredited Installer.

A. Application Temperature Conditions
B. Typical material application temperature: 374°F –410°F.

C. Maximum safe heating temperature: 437°F.
D. Air/Road temperature: Minimum 40°F and rising.
E. Application thickness: decorative bituminous concrete is to be applied at a thickness of 0.6” to 0.8”.
F. For substrates that have properly installed control joints, to the extent where possible it is recommended to lay the decorative bituminous concrete pattern in such a way that the natural joints of the pattern coincide with the construction joints in the substrate. To help joint coinciding with the substrate control joint must be installed in the decorative bituminous concrete.
G. The decorative bituminous concrete material shall be prepared for installation utilizing a heating kettle specifically designed for hot applied polymer modified synthetic asphalt surface treatment and capable of mixing components to a homogenous consistency. The Material shall be heated within the temperature range of 374°F – 410°F prior to installation. To preserve the integrity of the material, do not overheat the decorative bituminous concrete material.
H. The decorative bituminous concrete material shall be uniformly distributed onto the pavement surface by means of pre-heated finishing irons.
I. The heated and mixed material is hand applied over the prepared surface at an average depth of between 0.6” and 0.8”. Grade control devices may be used by the Accredited decorative bituminous concrete Installer to ensure the proper thickness is obtained.
J. Interface with adjacent surfaces shall be flush, providing smooth transition from surface to surface. Precautions to protect the immediate perimeter around the installation are to be taken.
K. Applying the sand cover: Immediately apply the dried silica sand at an approximate rate of 0.2 lb/SF. The placement of this material does not require any compaction.
L. Decorative bituminous concrete the pattern design: The Accredited Installer will stamp the pattern into the semi-molten material immediately after the silica sand application using an approved mold. The mold is pressed into the material to a depth of between 0.2” and 0.4” depending on the thickness of the material.
M. After initial set, remove excess aggregate by hand or suction sweeping prior to opening to traffic.
N. Heat all cold edges to ensure good adhesion between successive applications of material.

Open to Traffic

The Work can be open to traffic when the decorative bituminous concrete material has cooled and hardened. This is typically 1 hour, but depends on the actual ambient conditions. More time may be required in hot weather. The Accredited decorative bituminous concrete Installer can advise when the Work is ready for traffic.

Electrical Conduit

Description

This item shall consist of furnishing and installing conduit of the size and type specified with necessary fittings, where called for, at locations shown on the plans or as directed by the Engineer and in accordance with these specifications.

Materials

Materials for this work shall conform to the requirements of Article M.15.09.

Construction Methods

The conduit shall be installed in the locations and to the dimensions shown on the plans or as directed by the Engineer. All conduit runs shall be installed in a neat and workmanlike manner in accordance with recognized trade practices. Trenching and backfilling of conduit shall conform to Article 10.01. All conduit shall be installed in strict accordance with the current NEC. Where conduit is to be capped, a commercial pipe or conduit cap shall be used. An expansion fitting shall be used wherever required by an expansion joint in the structure. Upon completion of the work, all conduits shall be cleaned, swabbed and free from obstructions and burrs. For buried conduit, marking tape shall be installed in the trench at the depth and to the requirements as set forth in the Article 1.05.15. After all cable has been installed, U.L. approved duct sealing compound shall be installed in the ends of all conduit which terminates in foundations, handholes, junction boxes and manholes.

1. **Conduit Surface:** Beam clamps or conduit strips with back spacers shall be provided at intervals in accordance with the NEC. Expansion fittings shall be installed at all expansion joints. All surface mounted conduit on wood poles shall be bonded to a driven ground rod. Stand-offs shall be installed in accordance with serving utility company regulations.
2. **Conduit in Trench:** Trenches shall be of the depth and cross section shown on the plans or as directed by the Engineer. All conduit shall have a minimum covering of 2 feet (600 millimeters).
3. **Conduit Under Roadway:** Installations shall be such as to avoid pockets in runs. Conduit shall have a minimum cover of 2 feet (600 millimeters). Each end of conduit runs shall terminate with a cap in a concrete handhole as shown on the plans. The Contractor shall coordinate the placement of the conduit prior to the placement of the pavement. Where conduit is to be installed under an existing roadway a trench shall be opened and conduit installed as shown on plans, or as directed by the Engineer. The trench shall be backfilled with suitable material and the surface shall be restored to original condition.
4. **Conduit in Structure:** It shall be the Contractor's responsibility to coordinate the setting of all conduit in structure prior to pouring concrete. Expansion fittings shall be installed at all expansion joints. Where shown on the plans, outlet boxes with the conduits properly connected and conduit hanger inserts with proper sized nuts installed, shall be accurately and securely placed in the forms for concrete. Care shall be taken during the placing of the concrete around these boxes and inserts to consolidate the concrete thoroughly, preventing voids and honeycomb and to prevent any material displacement of the boxes or inserts. Sealed bonding bushing shall be provided at each conduit outlet in all boxes.
5. **Conduit Under Slope Protection:** Conduit shall be installed in trench under bridge slope protection or between the slope protection and the edge of pavement at the locations and to the dimensions shown on the plans or as directed by the Engineer. The conduit shall have a minimum cover of two feet (600 millimeters) under finish grade and each end of the conduit shall extend 10 feet (3 meters) beyond the limits of the slope protection. All conduit shall terminate with a standard pipe cap and the trench shall be backfilled with suitable material. The Contractor shall coordinate the placement of the conduit prior to the placement of slope protection.

Decorative Lamp Base

Description

Under this item, the contractor shall install the decorative light pole foundations as shown on the plans and specified herein.

Materials
The materials for the work shall conform to the following:

Decorative Light Pole Foundation: The Contractor is responsible for installation of pre-cast concrete bases, trenching and laying of conduit with sweeps in and out of base, and a driven ground rod with bare copper wire at each base.

Concrete foundations: Class "F" concrete shall conform to the requirements of section 6.01 and Article M.03.01 of the State of Connecticut Department of Transportation Standard Specifications for Roads, Bridges, and Incidental Construction Form 816.

The reinforcing steel shall conform to Article M.06.01 of the State of Connecticut Department of Transportation Standard Specifications for Roads, Bridges, and Incidental Construction Form 816.

Electrical conduit shall conform to the requirements of Article M.15.09.

Ground rods shall conform to the requirements of Article M.15.15-7.

Construction Methods:
The concrete foundations for the decorative lights shall be set on flat compacted subgrade. It shall be backfilled in compacted 6" lifts ups to the depth as specified in the construction documents.

Contractor shall install decorative light pole foundation in accordance with the methods of construction as shown on the plans or as directed by the Town.

Decorative Light (Lamp and Pole)

Description
Under this item, the Contractor shall install decorative lights (poles and luminaires) as shown on the plans and specified herein.

Materials
The Town shall provide the decorative light (lamp and pole) to the Contractor. The Contractor is responsible for the installation of the pole and luminaire.

The Contractor is responsible for providing and installing branch circuit conductors and conduit from the load enter within the power pedestal locations to each new pole and luminaire.

Construction Methods
The decorative light shall be installed in accordance with the manufacturer's recommendations and anchor bolted to a concrete base at the location and in the method as shown on the plans or as directed by the Town.

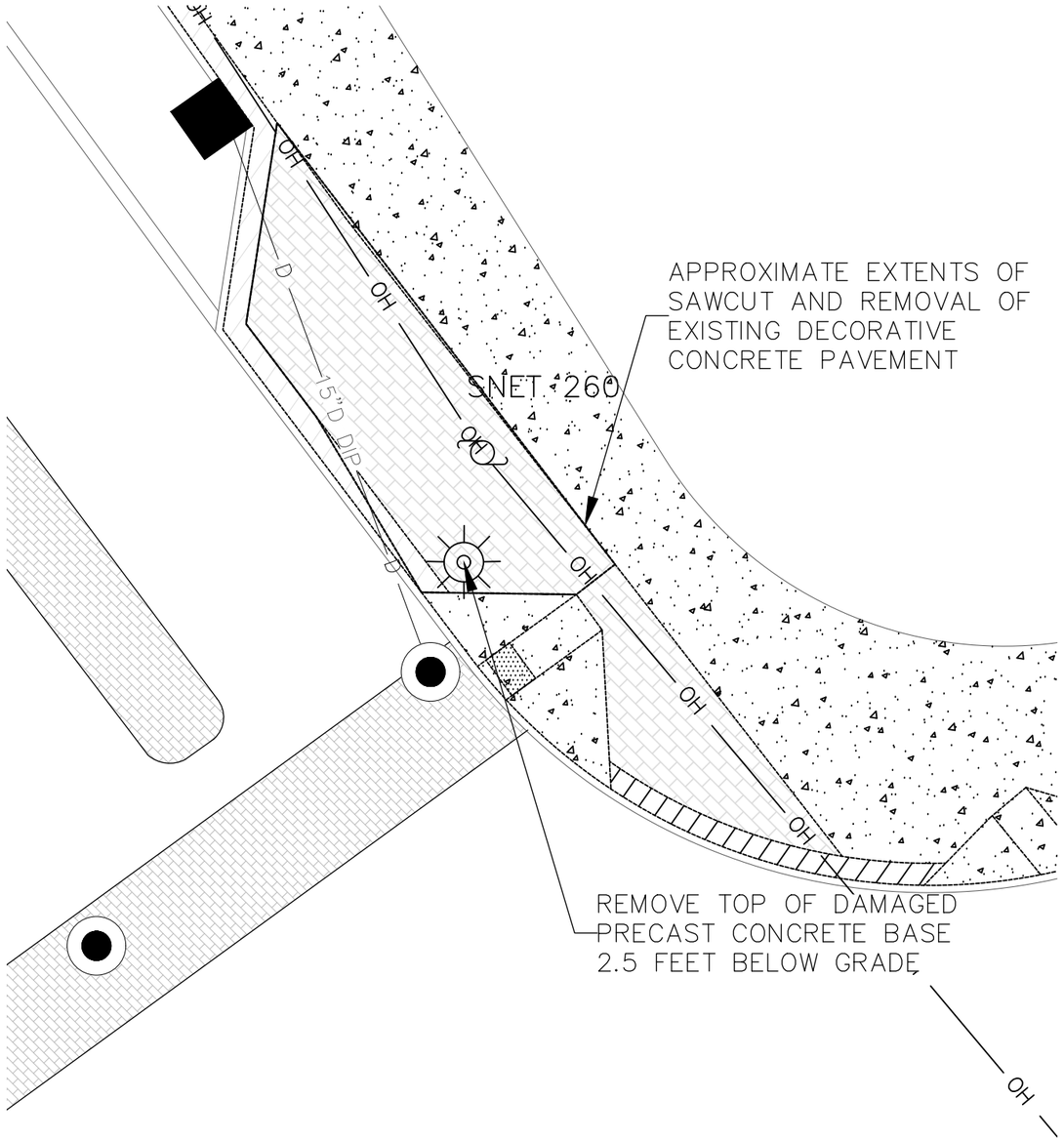

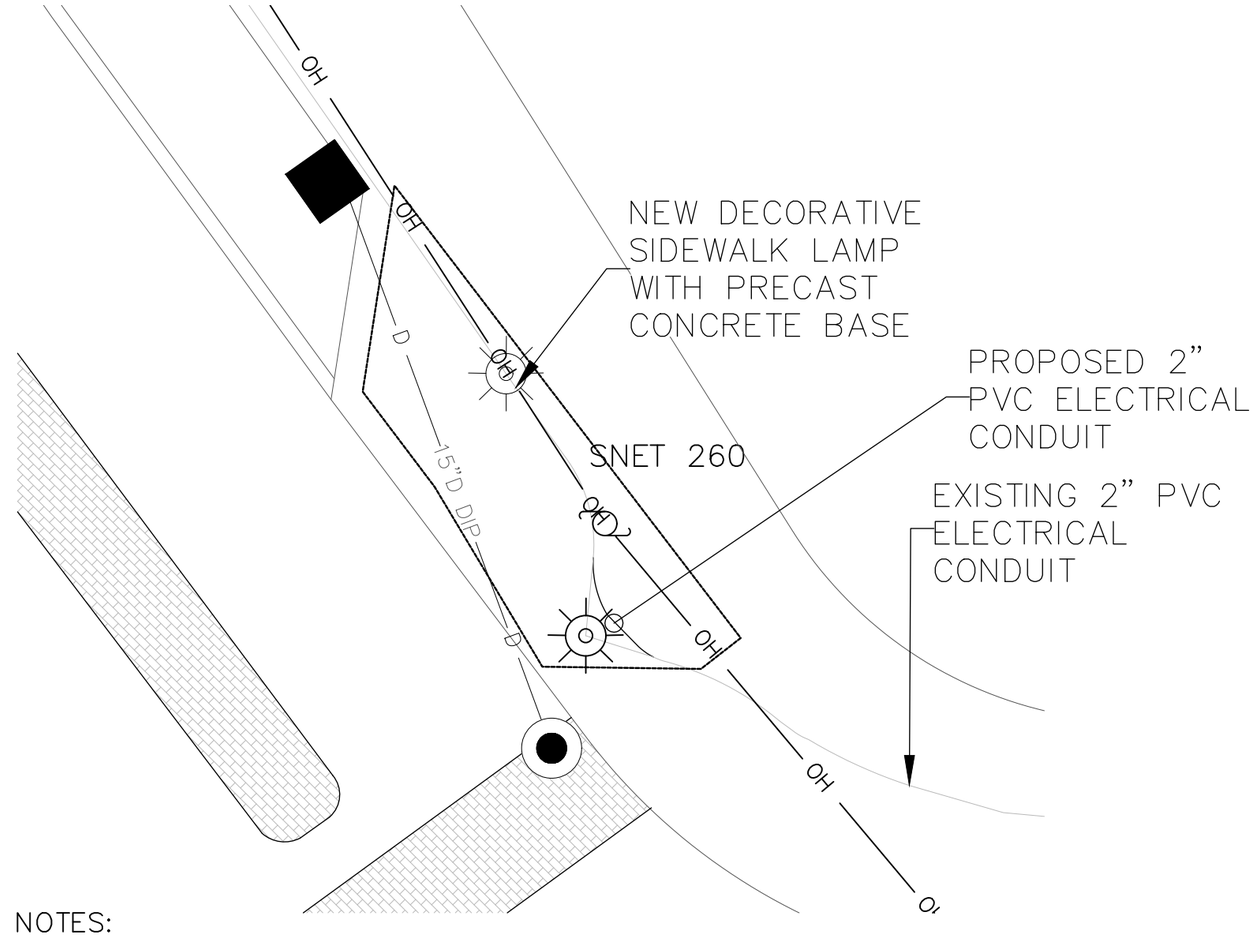

NOTES:

1. CONTRACTOR SHALL OBTAIN ALL NECESSARY PERMITS, INCLUDING BUT NOT LIMITED TO, ELECTRICAL PERMIT AND CONNECTICUT DEPARTMENT OF TRANSPORTATION ENCROACHMENT PERMIT.
2. DECORATIVE CONCRETE PAVEMENT SHALL USE ASHLAR SLATE TEMPLATE AND THE INTEGRAL COLOR SHALL BE COOL GREY AS MANUFACTURED BY BOMANITE OF GRANITE BAY, CA OR APPROVED EQUAL.
3. NEW WIRE SHALL BE RUN BETWEEN EXISTING AND NEW LIGHTS,

Drawing Title	Location	Date: MAY 8, 2016	
RELOCATION OF DECORATIVE SIDEWALK LIGHT	INTERSECTION OF STORRS ROAD (RT 195) AND SOUTH EAGLEVILLE ROAD (RT 275)	Scale: 1"=10'	
		Drawn By: R. Bergeron	
		Checked By: D. DILAJ	

0 10 20 Feet

N

MANSFIELD · CONN · INCORPORATED · OCT · 1702 · OFFICE BUILDING

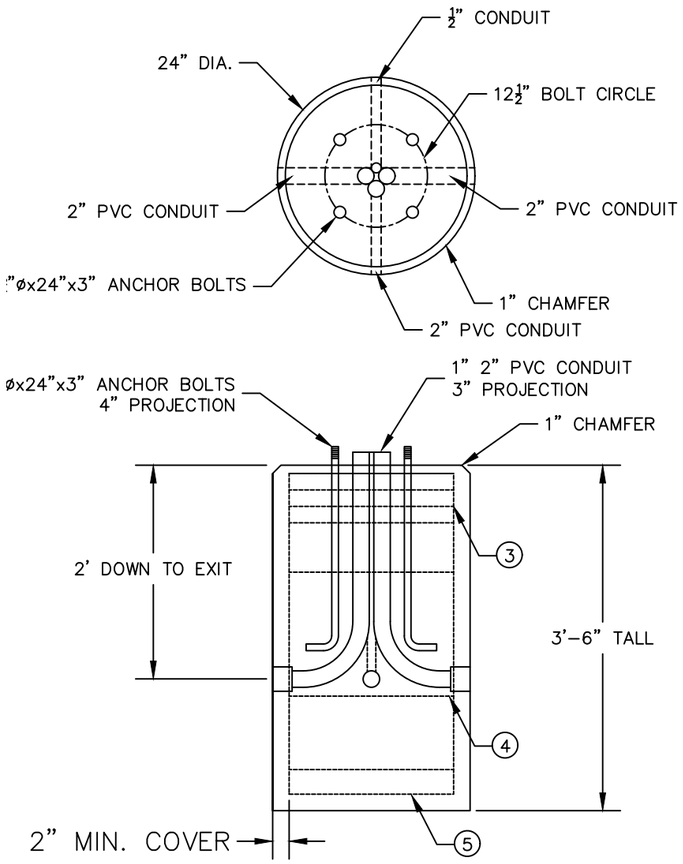

NOTES:

1. CONCRETE – 5,000 PSI, 28 DAYS
2. ANCHOR BOLTS AND SWEEPS PROVIDED BY MANUFACTURER
3. (3) #4 REBAR HORIZONTAL WRAP 2" O.C.
4. #4 REBAR HORIZONTAL WRAP 12" O.C.
5. (6) #8 REBAR VERTICAL

TYPICAL SECTION

PRECAST CONCRETE LIGHT BASE

N.T.S.

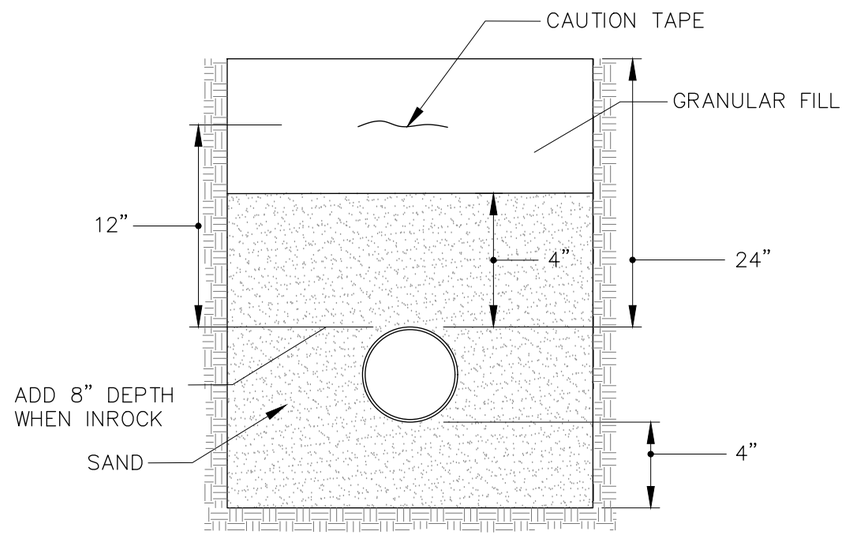

CONDUIT IN TRENCH

N.T.S.

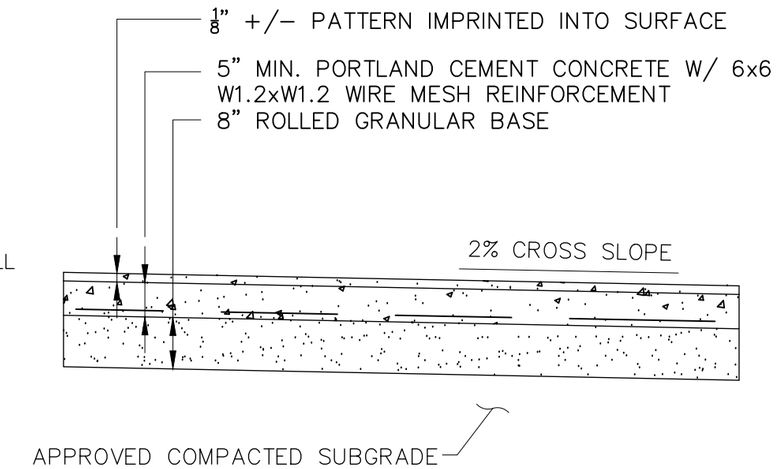

TYPICAL SECTION

DECORATIVE CONCRETE PAVEMENT

N.T.S.

Drawing Title	Location	Date: MAY 8, 2016	
DETAILS	INTERSECTION OF STORRS ROAD (RT 195) AND SOUTH EAGLEVILLE ROAD (RT 275)	Scale: 1"=10'	
		Drawn By: R. Bergeron	
		Checked By: D. DILAJ	

0 10 20 Feet

N

MANSFIELD · CONN · INCORPORATED · OCT · 1702 · OFFICE BUILDING

CONTRACT DOCUMENTS AND SPECIFICATIONS

Removal and Relocation of a Decorative Sidewalk Light

TOWN OF

MANSFIELD, CONNECTICUT

July 2016

TOWN OF MANSFIELD

4 SOUTH EAGLEVILLE ROAD

MANSFIELD, CONNECTICUT 06268

TABLE OF CONTENTS

CONTRACT AGREEMENT 47
SUPPLEMENT TO CONTRACT AGREEMENT 49
EXHIBIT I 52
GENERAL CONDITIONS 53
1. Contract and Contract Documents 53
2. Definitions 53
3. Materials, Services and Facilities 53
4. Contractor's Title to Material 53
5. Inspection and Testing of Materials 54
6. "Or Equal" Clause 54
7. Patents 54
8. Surveys, Permits and Regulations 55
9. Contractor's Obligations 55
10. Weather Conditions 55
11. Protection of Work and Property--Emergency 55
12. Reports, Records and Data 56
13. Superintendence by Contractor 56
14. Changes in Work 56
15. Extras 57
16. Time for Completion and Liquidated Damages 57
17. Correction of Work 58
18. Conditions Found Different 58
19. Claims for Extra Costs 58
20. Right of the Owner to Terminate Contract 58
21. Construction Schedule 59
22. Payment To Contractor (Also see Sections 35 & 36) 59
23. Acceptance of Payment as Release 60
24. Contractor's Insurance 60
25. Assignments 61
26. Subcontracting 61
27. Department of Public Works Authority 62
28. Quantities of Estimate 62
29. Conflicting Conditions 62
30. Notice and Service Thereof 63
31. Required Provisions Deemed Inserted 63
32. Safety and Health Regulations for Construction 63
33. Suspension of Work 63
34. Equal Opportunity Provisions 63
35. Anti-Kick Back Provisions 63
CERTIFICATION OF NONSEGREGATED FACILITIES 64
36. Application for Payment 65
37. Measurement and Payment 65
38. Submittals 65
39. Shop Drawings 65

40. Samples 66
41. Warranty 66
42. Contract Closeout Procedures 66
43. Project Record Documents 66
44. Cleaning Up 66
45. Public Assignment 67
SPECIAL CONDITIONS 68
1. General 68
2. Sampling, Inspection and Testing of Materials 68
3. Safety 68
4. Enumeration of Plans 68
5. Delays 68
6. Protection of Existing Road and Facilities 69
7. Prevailing Wage Rates 69
8. Hurricane Protection 69
9. Protection against High Water and Storm 69
10. Lights, Barriers, Watchmen and Indemnity 69
11. Night Work 69
12. Shoring 69
13. Working Hours 70
14. Time of Completion 70
15. Private Property/Construction of Adjoining Buildings 70
16. Notice to Contractor - Permits/Permit Applications 70
17. Job Coordination Meetings 70
18. Phasing 70
NOTICE TO CONTRACTOR: UTILITY SPECIFICATIONS 71
NOTICE TO CONTRACTOR: CONTRACTOR TRAINING REQUIREMENT FOR 10-HOUR OSHA CONSTRUCTION SAFETY AND HEALTH COURSE 71
NOTICE TO CONTRACTOR: NON-DISCRIMINATION 72
NOTICE TO CONTRACTOR: EXECUTIVE ORDERS 75
NOTICE TO CONTRACTOR: STATE ELECTION ENFORCEMENT COMMISSION (SEEC) CAMPAIGN CONTRIBUTION BAN 76

CONTRACT AGREEMENT

TOWN OF MANSIELD

DEPARTMENT OF PUBLIC WORKS

REMOVAL AND RELOCATION OF A DECORATIVE SIDEWALK LIGHT

This agreement made and entered into on the_____ day of_____, 2016, between:

THE TOWN OF MANSFIELD, acting by and through its Director of Finance, and hereinafter referred to as "Town",

_____, a corporation organized and existing under the laws of the State of_____, a partnership, or an individual doing business as_____ and hereinafter referred to as "Contractor,"

WITNESSETH;

That for and in consideration of the payments and agreements hereinafter mentioned, the CONTRACTOR hereby agrees with the TOWN to commence and complete the work described as follows:

REMOVAL AND RELOCATION OF A DECORATIVE SIDEWALK LIGHT

Hereinafter called the PROJECT, for the sum of _____ Dollars ($_____) and all extra work in connection therewith, under the terms as stated in the General and Special Conditions of the Contract; and at his (its or their) own proper cost and expense to furnish all the materials, supplies, machinery, equipment, tools, superintendence, labor insurance, and other accessories and services necessary to complete said project in accordance with the conditions and prices stated in the Bid Form/Proposal, the General Conditions and Special Conditions of the contract, the plans, which include all maps, plots, blueprints, and other drawings and printed or written explanatory matter thereof, the specifications and contract documents all of which are attached hereto and made a part hereof and collectively evidence and constitute the contract.

The CONTRACTOR hereby agrees to commence work under this contract on or before _____, and to fully complete the Removal and Relocation of a Decorative Sidewalk Light Project prior to the September 30, 2016, completion date for that project. The CONTRACTOR further agrees to pay, as liquidated damages, the sum of $50 for each consecutive calendar day thereafter as hereinafter provided in the General Conditions. The TOWN agrees to pay the CONTRACTOR in current funds for the performance of the contract, subject to additions, and deductions as provided in the General Conditions of the contract, and to make payments on account thereof as provided in Section 22, "Payment to Contractor" of the General Conditions.

IN WITNESS WHEREOF, the parties to these presents have executed this contract in two (2) counterparts, each of which shall be deemed an original, in the year and day first mentioned above.

CONTRACTOR	TOWN
_____	_____
	Director of Finance
_____	
_____	
(SEAL)	
	_____
Recommended for approval:	_____
	_____
	Director of Public Works
	_____
	Date

SUPPLEMENT TO
CONTRACT AGREEMENT
TOWN OF MANSFIELD
DEPARTMENT OF PUBLIC WORKS
Removal and Relocation of a Decorative Sidewalk Light

1. In the event of inconsistencies among the Contract Documents, this Document and the basic Contract Agreement it supplements, shall govern. If there are inconsistencies within or between parts of the Contract Documents that are not resolved by application of the immediately foregoing sentence, or between the Contract Documents and applicable standards, codes and ordinances, the Contractor shall (1) provide the better quality or greater quantity of work or (2) comply with the more stringent requirement. The terms and conditions of this paragraph shall not, however, relieve the Contractor of any of its obligations set forth elsewhere in the Contract Documents.

2. In performing its obligations under this Contract, the Contractor shall comply with all applicable statutes, laws, ordinances, regulations, codes, rules or orders of, or issued by, any governmental body having jurisdiction over the Performance of the Work

3. Each and every provision of law and Clause required by law to be inserted in this Contract shall be deemed to be inserted herein and the Contract shall be read and enforced as though it were included herein, and if through mistake or otherwise, any such provision is not inserted, or is not correctly inserted, then upon the application of either party, the Contract shall forthwith be physically amended to make such insertion.

4. The rights stated in the Contract Documents are cumulative and not in limitation of any Rights of the Town granted in the Contract Documents, at law, or in equity.

5. In no event shall the Town or its agents have control over, charge of, or any responsibility for construction means, methods, techniques, sequences or procedures or for safety precautions and programs in connection with the Work, notwithstanding any of the rights and authority granted the Town in the Contract Documents.

6. If any governmental body having jurisdiction over the Work requires licenses or registrations for the performance of the Work, or any part thereof, the Contractor shall hold said valid licenses or registrations as may be required by law to prosecute the Work to completion. If any part of the Work for which such a license or registration is required is to be performed by Subcontractors of any tier, the Contractor shall take reasonable actions to ensure that any such Subcontractor holds such valid licenses or registrations as may be required by law to prosecute said Work to completion.

7. To ensure that any Subcontractor is bound by the terms set forth in this Agreement between the Town and Contractor, the Contractor agrees to include a provision in each

Subcontract that incorporates by reference the terms of this Agreement and the Contract Documents incorporated by reference herein that shall apply to all work performed on this project by any Subcontractor in the following or similar terms: “The contractor and subcontractor shall be mutually bound by the terms of this agreement, and, to the extent that provisions of the prime contract apply to the

work of the subcontractor, the contractor shall assume toward the subcontractor all obligations and responsibilities that the owner, under the prime contract, assumes toward the contractor, and the subcontractor shall assume toward the contractor all obligations and responsibilities which the contractor, under the prime contract, assumes toward the owner and the architect.

8. The Contractor agrees that any contract it makes with any Subcontractor to do any of the Work pursuant to this Agreement shall contain a provision that the [Sub]contractor shall act as a Subcontractor to the Contractor, and that the Subcontractor agrees that it shall have no rights of any kind against the Town.

9. The Town will not be liable for damages to the Contractor as a result of delays suffered in completing the project. Extensions of time are the sole remedy available to the Contractor for this contingency.

10. The acceptance of Final Payment by the Contractor shall constitute a waiver of all claims by the Contractor, except those previously made in writing and designated as unresolved by the Contractor. In return for receipt of any partial payment, the Contractor or any Subcontractor receiving such partial payment shall issue a release of all claims through the date covered by any such partial payment in exchange for receipt of such payment.

11. By executing this Agreement, the Contractor warrants that its authorized representative has examined and compared the various components of the design documents, and has otherwise satisfied himself or herself to their accuracy, and thereby releases and holds the Town harmless from any liability for damages caused by either party's negligence to the full extent permitted by law.

12. Even if there is an ongoing dispute between the parties to this Agreement, the parties agree that the Work required by this Agreement shall continue until the project is completed.

13. The Work in this Contract should not interfere with safe operation of adjacent buildings and site. If interference appears possible because of new connections to existing work or other reasons, the Work involved must be done at a time and in a manner directed by the Town as a part of the Contract.

14. The Parties to this Agreement will make a good faith effort to resolve, without resort to litigation any dispute between or among the Town, Contractor, Consultants or Subcontractors.

15. The Contractor agrees to participate in mediation when required to do so by the Town to resolve a dispute with each other.

16. If, after good faith effort, either party determines that either a mediator cannot be agreed upon, or mutually agree ground rules cannot be agreed upon, either party may give notice of its intent to litigate. No litigation may commence earlier than sixty (60) days after sending notice of intent to litigate, unless failure to commence litigation is reasonably likely to result in demonstrable harm.

17. If the dispute cannot be resolved by the principals during the process, then either party may bring the dispute to a court of competent jurisdiction, namely, the Superior Court for the Judicial District of Tolland at Rockville. The notice period for litigation shall be limited to sixty (60) days.

18. Should a subcontractor, at any time, refuse or neglect to supply a sufficiency of properly skilled workers or of material of the proper quality or quantity, or fail in any respect to prosecute the Work required of such subcontractor pursuant to the contract between the subcontractor and the Contractor with competence, promptness and diligence, or fail in the performance of any of its covenants with the Contractor, in addition to any rights of the Contractor to address any such situation, the Town may at its option terminate the Agreement between the Contractor and such subcontractor after serving a three days written notice to the Contractor and such subcontractor. In the case of such discontinuance by the Town, the Town shall ensure that the subcontractor is paid the fair value of such subcontractor's work performed and materials supplied to the project to the date of termination of the contract of the subcontractor by the Town.

So agreed:

CONTRACTOR	TOWN
_____	_____
	Director of Finance
_____	
_____	_____
	Director of Public Works
	_____
	Date

EXHIBIT I

Contractor's Indemnification

The Contractor is aware of and agrees that he is bound by the following indemnification language:

To the fullest extent permitted by law, the Contractor shall release, defend, indemnify, and hold harmless the Town of Mansfield, their respective boards, commissions, officers, officials, employees, agents, representatives, and servants from any and all suits, claims, losses, damages, costs (Including without limitation reasonable attorneys' fees),compensation, penalties, fines, liabilities or judgments or any name or nature for:

- Bodily injury, sickness, disease, or death; and/or
- Damage to or destruction of property, real or personal; and/or
- Financial losses (including, without limitation, those caused by loss of use)

sustained by any person or concern, including officers, employees, agents, Subcontractors or servants of the Town, or the Contractor, or by the public, which is cause or alleged to have been caused in whole or in part by the negligent act(s) or omission(s) of the Contractor, its officers, employees, agents, or Subcontractors, in the performance of this Agreement or from the inaccuracy of any representation or warranty of the Contractor contained in the Contract Documents. This indemnity shall not be affected by other portions of the Agreement relating to insurance requirements.

To the fullest extent permitted by law, the Contractor agrees to release, defend, indemnify, and hold harmless the Town of Mansfield, their respective boards and commissions, officials, officers, employees, agents, representatives, and servants from any loss, claim, cost penalty, fine or damage that may arise out of the failure of the Contractor, its officers, agents, employees or Subcontractors to comply with any laws or regulations of the United States of America, the State of Connecticut, the Town of Mansfield, or their respective agencies. This undertaking shall not be affected by other portions of the Agreement relating to insurance requirements.

STATE OF CONNECTICUT:

COUNTY OF:

Signed:

_____
Contractor

By_____

Address_____

_____

Date _____, 2016

Subscribed and Sworn to before me on this ___ day of _____, 2016.

_____
Notary Public

GENERAL CONDITIONS

1. Contract and Contract Documents

The plans, specification and addenda shall form part of the contract and provisions thereof shall be as binding upon the parties hereto as if they were herein fully set forth. The table of contents, titles, headings, running headlines and marginal notes contained herein and in said documents are solely to facilitate reference to various provisions of the contract documents and in no way affect, limit or cast light on the interpretation of the provisions to which they refer.

2. Definitions

The following terms as used in these General Conditions are respectively defined as follows.

A. "Contractor" - A person, firm or corporation with whom this contract is made by the Town.

B. "Subcontractor" - A person, firm or corporation supplying labor, equipment or materials for work at the site of the project for, and under separate contract or agreement with, the Contractor.

C. "Work on (at) the project" - Work to be performed at the locations of the project including the transportation of materials, equipment and supplies to or from the location(s) of the project by the employees of the contractor and any subcontractor.

D. "Owner or Town" - The Town of Mansfield, Connecticut, acting by and through its Town Manager, Director of Public Works, Director of Finance, or their authorized representative.

E. "Engineer" - The Town of Mansfield Director of Public Works, or his authorized representative.

3. Materials, Services and Facilities

It is understood that, except as otherwise specifically stated in the contract documents, the Contractor shall provide and pay for all materials, labor, tools, equipment, water, light, power, transportation, superintendence, temporary construction of every nature, and all other services and facilities of every nature whatsoever necessary to execute, complete, and deliver the work within the specified time. Any work necessary to be performed after regular hours, on Sundays or Legal Holidays, shall be performed without additional expense to the Owner.

4. Contractor's Title to Material

No materials or supplies for the work shall be purchased by the Contractor or by any Subcontractor subject to any chattel mortgage or under a conditional sale contract or other agreement by which an interest is retained by the seller. The Contractor warrants that he has good title to all materials and supplies used by him in the work, free from all liens, claims or encumbrances.

5. Inspection and Testing of Materials

All materials and equipment used in the construction of the project shall be subject to adequate inspection and testing in accordance with accepted standards. The laboratory or inspection agency shall be as stipulated by the Owner. The Owner will pay for all laboratory inspection services directly, and not as part of the contract.

The Contractor shall supply in a timely fashion samples of any materials required to be tested along with certified test reports and certificates of compliance when required. No material shall be incorporated into the work without testing. Any material incorporated into the work and found to be deficient will be removed or replaced at the Contractor's sole expense.

Materials of construction, particularly those upon which the strength and durability of the finished product may depend, shall be subject to inspection and testing to establish conformance with specifications and suitability for users intended.

6. "Or Equal" Clause

Whenever a material, article or piece of equipment is identified in the project documents by reference to manufacturers' or vendors' names, trade-names, catalogue numbers, etc., it is intended merely to establish a standard; and, any material, article or equipment of other manufacturers and vendors which will perform adequately the duties imposed by the general design will be considered equally acceptable provided the material, article, or equipment so proposed is, in the opinion of the Town, of equal substance and function. It shall not be purchased or installed by the Contractor without the Town's written approval.

7. Patents

The Contractor shall hold and save the owner and its officers, agents, servants, and employees harmless from liability of any nature or kind, including cost and expenses for, or on account of, any patented or unpatented invention, process, article, or appliance manufactured or used in the performance of the contract, including its use by the owner, unless otherwise specifically stipulated in the Contract Documents. If the Contractor uses any design, device or materials covered by letters, patent or copyright, he shall provide for such use by suitable agreement with the Owner of such patented or copyrighted design, device or material. It is mutually agreed and understood that, without exception, the contract prices shall include all royalties or costs arising from the use of such design, device or materials, in any way involved in the work. The Contractor and/or his Sureties shall indemnify and save harmless the Owner of the project from any and all claims for infringement by reason of the use of such patented or copyrighted design, device or materials or any trademark or copyright in connection with work agreed to be performed under this contract, and shall indemnify the Owner for any cost, expense or damage which it may be obliged to pay by reason of such infringement at any time during the prosecution of the work or after completion of the work.

8. Surveys, Permits and Regulations

Unless otherwise expressly provided for in this contract, the Owner will furnish to the Contractor control survey points only for the execution of the work, and the Town shall provide all surveying necessary for the layout of the work. The Contractor shall execute, procure and pay for all permits, licenses and approvals necessary for the execution of his contract. The Contractor shall comply with all laws, ordinances, rules, orders, and regulations relating to the performance of the work.

The Contractor is hereby notified that all permit and permit applications contained herein shall be made a part of this Contract, and that the Contractor shall be bound to comply with all requirements of such permits and permit applications as though the Contractor were the permittee. If at the time the permit is received its contents differ from that which is outlined in the application, the permit shall govern.

9. Contractor's Obligations

The Contractor shall and will, in good workmanlike manner, do and perform all work and furnish all supplies and materials, machinery, equipment, facilities and means, except as herein otherwise expressly specified, necessary or proper to perform and complete all the work required by this contract within the time herein specified, in accordance with the provisions of this contract and said specifications and in accordance with the plans and drawings covered by this contract and any and all supplemental plans and drawings, and in accordance with the directions of the Town as given from time to time during the progress of the work. The Contractor shall observe, comply with, and be subject to all terms, conditions, requirements, and limitations of the contract and specifications, and shall do, carry on, and complete all work to the satisfaction of the Town.

10. Weather Conditions

In the event of temporary suspension of work, or during inclement weather, or whenever the Town shall direct, the Contractor will, and will cause his Subcontractors to protect carefully insofar as is reasonably possible given the nature of the work, his and their work and materials against damage or injury from the weather. If, in the opinion of the Town, any work or materials shall have been damaged or injured by reason of failure on the part of the Contractor or any of his subcontractors to so protect his work, such material shall be removed and replaced at the expense of the Contractor.

11. Protection of Work and Property--Emergency

The Contractor shall at all times safely guard the Owner's property from injury or loss in connection with this contract. He shall at all times safely guard and protect his own work, and that of adjacent property, from damage. The Contractor shall replace or make good any such damage, loss or injury unless such be caused directly by errors contained in the contract or by the Owner, or his duly authorized representative.

In case of an emergency which threatens loss or injury of property and/or safety of life, the Contractor will be allowed to act, without previous instructions from the Town, in a diligent manner.

He shall notify the Town immediately thereafter. Any claim for compensation by the Contractor due to such extra work shall be promptly submitted to the Town for approval.

Where the Contractor has not taken action but has notified the Town of an emergency threatening injury to persons or damage to the work of any adjoining property, he shall act as instructed or authorized by the Town.

The manner of reimbursement claimed by the Contractor on account of any emergency action shall be determined in the manner provided in Paragraph 14 of the General Conditions.

12. Reports, Records and Data

The Contractor shall submit to the Owner, in a format satisfactory to the Town, such schedule of quantities and costs, progress schedules, payrolls, reports, estimates, records and other data as the Owner may request concerning work performed or to be performed under this contract. Certified payroll records indicating the payment of all labor on this contract shall be submitted to the Owner along with all requests for payment.

13. Superintendence by Contractor

At the site of the work, the Contractor shall designate one person who shall have full authority to act for the Contractor. It is understood that such representative shall be acceptable to the Town.

14. Changes in Work

No changes in the work covered by the approved contract documents shall be made without having prior written approval of the Owner. Charges or credits for the work covered by the approved change shall be determined by one or more, or a combination of the following methods:

A. Unit bid prices previously approved
B. An agreed lump sum
C. The actual cost of:

1. Labor, including foremen;

2. Materials entering permanently into the work;

3. The ownership or rental cost of construction plant and equipment during the time of use on the extra work;

4. Power and consumable supplies for the operation of power equipment;

5. Insurance;

6. Social Security and old age and unemployment contributions.

To the cost under 14 (c), there shall be added a fee to be agreed upon but not to exceed fifteen percent (15%) of the estimated cost of the work. The fee shall be compensation to cover the cost of supervision, overhead, bond, profit and any other general expenses.

15. Extras

Without invalidating the contract, the Owner may order extra work of the kind bid upon or make changes by altering, adding to or deducting from the work, the contract sum being adjusted accordingly. All the work of the kind bid upon shall be paid for at the price stipulated in the proposal, and no claims for any extra work or materials shall be allowed unless the work is ordered in writing by the Owner and the price is stated in the order.

16. Time for Completion and Liquidated Damages

It is hereby understood and mutually agreed by and between the Contractor and Owner, that the date of beginning and the time for completion as specified in the contract of work to be done hereunder are ESSENTIAL CONDITIONS of this contract; and it is further mutually understood and agreed that the work embraced in this contract shall be commenced on or before the date specified.

The Contractor agrees that said work shall be prosecuted regularly, diligently, and uninterruptedly at such rate of progress as will insure full completion thereof within the time specified. It is expressly understood and agreed, by and between the Contractor and the Owner, that time for the completion of the work described herein is a reasonable time for the completion of the same, taking into consideration the average climatic range and usual industrial conditions prevailing in this locality.

If said Contractor shall neglect, fail or refuse to complete the work within the time herein specified, or any proper extension thereof granted by the Owner, then the Contractor does hereby agree, as a part consideration for the awarding of this contract, to pay the Owner the amount specified in the contract, not as a penalty but as liquidated damages for such breach of contract as hereinafter set forth, for each and every calendar day that the Contractor shall be in default after the time stipulated in the contract for completing the work.

It is further agreed that time is of the essence of each and every portion of this contract and of the specification wherein a definite and certain length of time is fixed for the performance of any act whatsoever; and where under the contract an additional time is allowed for the completion of any work, the new time limit fixed by such extension shall be of the essence of this contract. Provided, that the Contractor shall not be charged with liquidated damages or any excess cost when the Owner determines that the Contractor is without fault and the Contractor's reasons for the time extension are acceptable to the Owner; Provided further, that the Contractor shall not be charged with liquidated damages or any excess cost when the delay in completion of the work is due:

A. To any preference, priority or allocation order duly issued by the government of the United States or the State of Connecticut.

B. To unforeseeable cause beyond the control and without the fault or negligence of the Contractor, including but not restricted to, acts of God, or of the public enemy, acts of the Owner, acts of

another contractor in the performance of a contract with the Owner, fires, floods, epidemics, quarantine restrictions, strikes, freight embargoes, and severe weather;

C. To any delays of subcontractors or suppliers occasioned by any of the causes specified in subsections a and b of this article: Provided further, that the Contractor shall, within ten (10) days from the beginning of such delay, unless the Owner shall grant a further period of time prior to the date of final settlement of the contract, notify the Owner, in writing, of the cause of delay, who shall ascertain the facts and extent of the delay and notify the Contractor within a reasonable time of its decision in the matter.

17. Correction of Work

All work, all materials, whether incorporated in the work or not, all processes of manufacture, and all methods of construction shall be at all times and places subject to the inspection of the Owner who shall be the final judge of the quality and suitability of the work, materials, processes of manufacture and methods of construction for the purposes for which they are used. Should they fail to meet his approval they shall be forthwith reconstructed, made good, replaced and/or corrected, as the case may be, by the Contractor at his own expense. Rejected material shall immediately be removed from the site. If, in the opinion of the Owner, it is undesirable to replace any defective or damaged materials or to reconstruct or correct any portion of the work injured or not performed in accordance with the contract documents, the compensation to be paid to the Contractor hereunder shall be reduced by such amount as in the judgment of the Owner shall be equitable.

18. Conditions Found Different

Should the Contractor encounter conditions at the site materially differing from those indicated in the contract documents, he shall immediately give notice to the Owner of such conditions before they are disturbed. The Owner will thereupon promptly investigate the conditions, and if he finds that they materially differ from those indicated in the Specifications, he will at once make such changes in the contract documents as he may find necessary, and any increase or decrease of cost resulting from such changes is to be adjusted in the manner provided in paragraph 14 of the General Condition.

19. Claims for Extra Costs

No claim for extra work or cost shall be allowed unless the same was done in pursuance of a written order of the Owner, as aforesaid, and the claim presented with the first estimate after the changed or extra work is done. When work is performed under the terms of subparagraph 14(c) of the General Conditions, the Contractor shall furnish satisfactory bills, payrolls, and vouchers covering all items of cost and, when requested by the Owner, give the Owner access to accounts relating thereto.

20. Right of the Owner to Terminate Contract

If the Contractor is adjudged bankrupt, or if he makes a general assignment for the benefit of his creditors, or if a received is appointed on account of his insolvency, or if he persistently or repeatedly refuses or fails, except in cases for which extension of time is provided, to supply enough properly

skilled workmen or proper materials, or if he fails to make the prompt payment to Subcontractors or for materials or labor, or persistently disregards laws, ordinances, rules, regulations or orders of any public authority having jurisdiction, or otherwise is guilty of a substantial violation of a provision of the Contract Documents, then the Owner, providing sufficient cause exists to justify such action, may, without prejudice to any right or remedy and after giving the Contractor and his surety, if any, seven days written notice, terminate the employment of the Contractor and take possession of the site and of all materials, equipment, tools, construction equipment and machinery thereon owned by the Contractor and may finish the work by whatever method he may deem expedient. In such case, the Contractor shall not be entitled to receive any further payment until the work is finished.

If the unpaid balance of the Contract Sum exceeds the costs of finishing the work, such excess shall be paid to the Contractor. If such costs exceed the unpaid balance, the Contractor shall pay the difference to the Owner. The amount to be paid to the Contractor or to the Owner, as the case may be, shall be in the manner provided in Section 22, and this obligation for payment shall survive the termination of the Contract.

If the work is stopped for a period of thirty days under an order of any court or other public authority having jurisdiction, or as a result of an act of government, such as a declaration of a national emergency making materials unavailable, through no act or fault of the Contractor or a Subcontractor or their agents or employees or any other persons performing any of the work under a contract with the Contractor, or if the work should be stopped for a period of thirty days by the Contractor because the Owner has not made payment thereon as provided in Section 22, then the Contractor may, upon seven additional days written notice to the Owner, terminate the Contract and recover from the Owner payment for all work executed and for any proven loss sustained upon any materials, equipment, tools, construction equipment and machinery, including reasonable profit and damages.

21. Construction Schedule

Immediately after execution and delivery of the contract, the Contractor shall deliver to the Town an estimated construction progress schedule and bar chart both electronically and in a form satisfactory to the Town showing the proposed dates of commencement and completion of each of the various subdivisions of work required under the contract documents and the monetary values associated with each segment or subdivision of work. Said proposed schedule shall not be official until accepted and approved by the Owner. Contractor shall update this construction schedule monthly or as required by the Owner such that his work can be coordinated with the other contractual work proceeding in this area. Such schedule must provide for the coordination of work with other work being done in the Storrs Center area.

22. Payment To Contractor (Also see Sections 36 & 37)

The Town shall make monthly payments to the Contractor on the basis of a duly certified and approved estimate of the work performed under the contract. Final payment shall be made after the final completion and acceptance of all work covered by the contract.

The Contractor agrees that he will indemnify and save the Owner harmless from all claims growing out of the lawful demands of subcontractors, laborers, workmen, mechanics, materialmen, and

furnishers of machinery and parts thereof, equipment, power tools, and all supplies, including commissary, incurred in the furtherance of the performance of this contract. The Contractor shall, at the Owner's request, furnish satisfactory evidence that all obligations of the nature hereinabove designated have to be paid, discharged, or waived. If the Contractor fails to do so, then the Owner may, after having served written notice on said Contractor, either pay unpaid bills, of which the Owner has written notice, direct, or withhold from the Contractor's compensation a sum of money deemed reasonably sufficient to pay any and all such lawful claims until satisfactory evidence is furnished that all liabilities have been fully discharged whereupon full payment to the Contractor shall be made in accordance with the terms of this contract, but in no event shall the provisions of this sentence be construed to impose any obligations upon the Owner to either the Contractor or his Surety.

In paying any unpaid bills of the Contractor, the Owner shall be deemed the agent of the Contractor, and any payment so made by the Owner, shall be considered as payment made under the contract by the Owner to the Contractor, and the Owner shall not be liable to the Contractor for any such payment made in good faith.

23. Acceptance of Payment as Release

The acceptance by the Contractor of payment shall be and shall operate as a release of the Owner of all claims and all liability to the Contractor for all things done or furnished in connection with this work. No payment, however, final or otherwise, shall operate to release the Contractor or his Sureties from any obligation under this contract or the performance bond.

24. Contractor's Insurance

The Contractor shall procure and maintain insurance against claims for injuries or losses to persons or property that are alleged to have arisen in connection with activities of the Contractor and any agents, representatives, subcontractors or employees. Insurance companies must be licensed by the State of Connecticut or otherwise acceptable to the Town. The cost of such insurance, including required endorsements or amendments, shall be the sole responsibility of the Contractor. Full disclosure of any non-standard exclusions is required for all required coverages.

The coverage indicated below at *not less than* the specified limits are required for this project (agreement):

A. Comprehensive General Liability coverage naming the TOWN and STATE OF CONNECTICUT as additional insured, written on an occurrence basis: $1,000,000 per occurrence, $2,000,000 aggregate.
B. Automobile Liability coverage, including coverage $1,000,000 coverage for hired or borrowed autos, $1,000,000 per accident-combined single limit.
C. Workers' Compensation Coverage, (as per Connecticut law and custom) and employer's liability coverage $100,000 (each accident) /$100,000 (disease, each employee) /$500,000 (Disease, policy limit) limits or "Certificate of Solvency" issued by Connecticut Workers' Compensation Commission for self-insurers.

The required insurance form shall be certified by a duly authorized representative of the insurer(s) and incorporated into and made a part of this agreement. Properly executed certificates signifying adequate coverage in effect for the duration of the contract with renewal certificates issued not less than 30 days prior to expiration of a policy period, must be submitted with the bid on file with the Town prior to commencement of this project (agreement).

Insurance as required by the Town of Mansfield shall be furnished by the Contractor to the Town. The Town of Mansfield shall be listed as “also insured” by name on all insurance certifications. Failure of the Contractor to maintain all required insurance in accordance with the Contract shall constitute a material breach of the Contract and shall subject the Contractor the Town’s withholding liquidated damages from the Contractor in the amount of ten percent (10%) of the total Contract price, as it may be amended by construction orders, subject to the continued commercial availability of such coverage.

The Contractor shall not commence work under this contract until he has obtained all the insurance required above of the Information for Bidders attached hereto and such insurance has been approved by the Town. The Contractor shall furnish the Town with certificates showing the type, amount, class of operations covered, effective dates, and dates of expiration of policies. Such certificates shall also contain substantially the following statements: "The insurance covered by this certificate will not be canceled or materially altered, except after ten (10) days written notice has been received by the Town." The Town of Mansfield shall be listed as “additional insured” by name on all such insurance certifications.

25. Assignments

The Contractor shall not assign the whole or any part of this contract or any monies due or to become due hereunder without written consent of the Owner. In case the Contractor assigns all or any part of any monies due or to become due under this contract, the instrument of assignment shall contain a clause substantially to the effect that it is agreed that the right of the assignee in and to any monies due or to become due to the Contractor shall be subject to prior claims of all persons, firms and corporations for services rendered or materials supplied for the performance of the work called for in this contract.

26. Subcontracting

The Contractor may utilize the services of specialty subcontractors on those parts of the work which, under normal contracting practices, are performed by specialty subcontractors.

The Contractor shall not award any work to any subcontractor without prior written approval of the Owner, which approval will not be given until the Contractor submits to the Owner a written statement concerning the proposed award to the subcontractor, which statement will contain such information as the Owner may require.

The Contractor shall be as fully responsible to the Owner for the acts and omissions of his subcontractors, and of persons either directly or indirectly employed by them, as he is for the acts and omissions of persons directly employed by him.

The Contractor shall cause appropriate provisions to be inserted in all subcontracts relative to the work to bind subcontractors to the Contractor by terms of the General Conditions and other contract documents insofar as applicable to the work of the subcontractors and to give the Contractor the same power as regards terminating any subcontract that the Owner may exercise over the Contractor under any provision of the contract documents.

Nothing contained in this contract shall create any contractual relation between any subcontractor and the Owner.

27. Department of Public Works Authority

The Town Director of Public Works or his authorized representative shall give all orders and directions contemplated under this contract and specifications relative to the execution of the work. The Director of Public Works shall determine the amount, quality, acceptability, and fitness of the work which is to be paid for under this contract and shall decide all questions which may arise in relation to said work and the construction thereof. The Director of Public Works estimates and decisions shall be final and conclusive, except as herein otherwise expressly provided. In case any question shall arise between the parties hereto relative to said contract or be specifications, the determination or decision of the Director of Public Works shall be a condition precedent to the right of the Contractor to receive any money or payment for work under this contract affected in any manner or to any extent by such question.

The Director of Public Works, in consultation with the project architect where applicable, shall decide the meaning and intent of any portion of the specifications and of any plan or drawings where the same may be found obscure or be in dispute. Any differences or conflicts in regard to their work which may arise between the Contractor under this contract and other contractors performing work for the Owner shall be adjusted and determined by the Director of Public Works.

28. Quantities of Estimate

Whenever the estimated quantities of work to be done and materials to be furnished on a unit price basis under this contract are shown in any of the documents including the proposal, they are given for use in comparing proposals, and the right is expressly reserved, except as herein otherwise specifically limited, to increase or diminish them as may be deemed reasonably necessary or desirable by the Owner to complete the work contemplated by this contract, and such increase or diminution shall in no way vitiate this contract, nor shall any such increase or diminution give cause for claims or liability for damages.

29. Conflicting Conditions

See Paragraph 27.

30. Notice and Service Thereof

Any notice to any Contractor from the Owner relative to any part of this contract shall be in writing and considered delivered and the service thereof completed, when said notice is posted, by certified or registered mail, to said Contractor at his last given address, or delivered in person to said Contractor or his authorized representative on the work.

31. Required Provisions Deemed Inserted

Each and every provision of law and clause required by law to be inserted in this contract shall be deemed to be inserted herein, and the contract shall be read and enforced as though it were included herein, and if through mistake or otherwise any such provision is not inserted, or is not correctly inserted, then upon the application of either party the contract shall forthwith be physically amended to make such insertion or correction.

32. Safety and Health Regulations for Construction

In order to protect the lives and health of his employees under the contract, the Contractor shall comply with all pertinent provisions of the Contract Work Hours and Safety Standards Act, as amended, commonly known as the Construction Safety Act as pertains to health and safety standards; and shall maintain an accurate record of all cases of death, occupational disease, and injury requiring medical attention or causing loss of time from work, arising out of and in the course of employment on work under the contract.

33. Suspension of Work

Should the Owner be prevented or enjoined from proceeding with work or from authorizing its prosecution either before or after its prosecution, by reason of any litigation, the Contractor shall not be entitled to make or assert claim for damage by reason of said delay, but time for completion of the work will be extended to such reasonable time as the Owner may determine will compensate for time lost by such delay with such determination to be set forth in writing.

34. Equal Opportunity Provisions

Contractor must also complete the certification of non-segregated facilities on page 64.

35. Anti-Kick Back Provisions

In accordance with the provisions of the Copeland Anti-Kick Back Act (18 U.S.C. 874) as supplemented in Department of Labor Relations (29 CFR, Part 3), the Contractor is prohibited from inducing, by any means, any person employed in the construction, completion or repair of this project, to give up any part of the compensation to which he is otherwise entitled.

CERTIFICATION OF NONSEGREGATED FACILITIES

Applicable to federally assisted construction contracts and related subcontracts exceeding $10,000 which are not exempt from the Equal Opportunity clause.

The federally assisted construction contractor certifies that he does not maintain or provide for his employees any segregated facilities at any of this establishments, and that he does not permit his employees to perform their services at any location under his control where segregated facilities are maintained. The federally assisted construction contractor certifies further that he will not maintain or provide for his employees any segregated facilities at any of his establishments and that he will not permit his employees to perform their services at any location under his control where segregated facilities are maintained. The federally assisted construction contractor agrees that a breach of this certification is a violation of the Equal Opportunity clause in this contract. As used in this certification, the term "segregated facilities" means any waiting rooms, work areas, rest rooms and wash rooms, restaurants and other eating areas, time clocks, locker rooms and other storage or dressing areas, parking lots, drinking fountains, recreation or entertainment areas, transportation and housing facilities provided for employees which are segregated by explicitly directive or are in fact segregated on the basis of race, creed, color or national origin, because of habit, local custom or otherwise. The federally assisted construction contractor agrees that (except where he has obtained identical certifications from proposed contractors for specific time periods) he will obtain identical certifications from proposed subcontractors prior to the award of subcontracts exceeding $10,000 which are not exempt from the provisions of the Equal Opportunity clause, and that he will rain such certification in his files.

_____ _____

Signature Date

_____

Name and Title of Signer (please type)

Note: The penalty for making false statements in offers is prescribed in 18 U.S.C. 1001.

36. Application for Payment

Contractor shall utilize AIA form G702 including continuation sheets when required. For each item, provide a column for listing: Item Number; Description of work; Scheduled Value; Previous Applications; Work in Place and Stored Materials under this Application; Authorized Change Orders; Total Completed and Stored to Date of Application; Percentage of Completion; Balance to Finish; and Retainage. Application shall be typewritten. Certification shall be by signature of authorized officer. Contractor shall list each authorized Change Order as an extension on continuation sheet, listing Change Order number and dollar amount as for an original item of work. Contractor shall prepare Application for Final Payment as specified in paragraph 42 Closeout Provisions, submit three copies of each Application for Payment and an updated construction schedule with each Application for Payment monthly. When Owner requires substantiating information the Contractor shall submit data justifying dollar amounts in question. The Contractor shall provide one copy of data with cover letter for each copy of submittal. Show Application number and date, and line item by number and description.

37. Measurement and Payment

Each lump sum or unit price stated shall constitute full compensation as herein specified for each item of work completed in accordance with the drawings and specifications. No separate payment will be made for cleaning up. Such clean up shall be considered incidental to the item to which it applies and shall be included in the price for that item. In all items involving excavation, the price shall include doing the entire excavation necessary for the proper installation and function of that item. Where rock is encountered, the quantity shall be considered as that for rock excavation.

38. Submittals

Each submittal shall be made to the Owner and shall include three copies for review and distribution. Contractor shall sequentially number the transmittal forms. Resubmittals are to have an original number with an alphabetic suffix. Contractor shall identify Project, Contractor, Subcontractor or supplier, pertinent Drawing sheet and detail number(s), and specification Section number as appropriate. Contractor shall apply Contractor's stamp, signed or initialed certifying that review, verification of Products required, field dimensions, adjacent construction Work and coordination of information is in accordance with the requirements of the Work and Contract Documents. Submittals shall be scheduled to expedite the Project. Contractor shall identify variations from Contract Documents and Product or system limitations which may be detrimental to successful performance of the completed work. Contractor shall revise and resubmit submittals as required, identify all changes made since previous submittal. Contractor shall distribute copies of reviewed submittals to concerned parties. Contractor shall instruct parties to promptly report any inability to comply with provisions.

39. Shop Drawings

Each Subcontractor shall submit the number of reproductions which Contractor requires, plus three copies which will be retained by Owner. After review, the Contractor will distribute in accordance

with the above article on Procedures and for Record Documents described in paragraph 42 - Contract Closeout Procedures.

40. Samples

The Contractor shall submit samples, when specified in individual specification sections, to illustrate functional and aesthetic characteristics of the Product, with integral parts and attachment devices. The Contractor shall coordinate sample submittals for interfacing work.

41. Warranty

The Contractor warrants and guarantees to the Town and the Engineer that all materials and equipment will be new unless otherwise specified, and that all Work will be of good quality and free from faults or defects and in accordance with the requirements of the Contract Documents and of any inspections, tests or approvals referred to in herein. All unsatisfactory Work, all faulty or defective Work and all Work not conforming to the requirements of the Contract Documents or of such inspections, tests or approvals shall be considered defective. Prompt notice of all defects shall be given to the Contractor. All defective Work, whether or not in-place, may be rejected.

42. Contract Closeout Procedures

The Contractor shall submit written certification that Contract Documents have been reviewed, Work has been inspected, and that Work is complete in accordance with Contract Documents and ready for Owner's inspection. The Contractor shall provide submittals to Owner that are required by governing or other authorities, and submit final Application for Payment identifying total adjusted Contract sum, previous payments and sum remaining due.

43. Project Record Documents

The Contractor shall maintain on site, one set of the following record documents; record actual revisions to the Work:

A. Contract Drawings
B. Specifications
C. Change Orders and other Modifications to the Contract

44. Cleaning Up

During its progress, the work and the adjacent areas affected thereby shall be kept clean and all rubbish, surplus materials, and unneeded construction equipment shall be removed and all damage repaired so that the public and property owners will be inconvenienced as little as possible. Where material or debris has washed or flowed into or been placed in existing watercourses, ditches, gutters, drains, pipes, structures, work done under this Contract or elsewhere during the course of the Contractor's operations, such material or debris shall be entirely removed and satisfactorily disposed of during the progress of the work, and the ditches, drains, pipes, structures, and work, etc., shall upon completion of the work, be left in a clean and neat condition. On or before the completion of

the work, the Contractor shall, unless otherwise especially directed or permitted in writing, tear down and remove all temporary buildings and structures built by him; shall remove all temporary works, tools and machinery or other construction equipment furnished by him; shall remove, acceptably disinfect and cover all organic matter and material containing organic matter in, under and around privies, houses and other buildings used by him; shall remove all rubbish from any grounds which he has occupied; and shall leave the roads and all parts of the premises and adjacent property affected by his operations in a neat and satisfactory condition. The Contractor shall restore or replace, when and as directed, any public or private property damaged by his work, equipment or employees, to a condition at least equal to that existing immediately prior to the beginning of operations. To this end, the Contractor shall do as required, all necessary roadway or driveway, walk and landscaping work. Suitable materials, equipment and methods shall be used for such restoration. The Contractor shall thoroughly clean all materials and equipment installed by him and his subcontractors, and on completion of the work shall deliver it undamaged and in fresh and new appearing condition

45. Public Assignment

The Contractor or Subcontractor offers and agrees to assign to the public purchasing body all right, title and interest in and to all causes of action it may have under Section 4 of the Clayton Act, 15 U.S.C. 15 or under Chapter 624 of the General Statutes of Connecticut, arising out of the purchase of services, property or intangibles of any kind pursuant to a public purchase contract or subcontract. This assignment shall be made and become effective at the time the public purchasing body awards or accepts such contract without further acknowledgement by the parties.

SPECIAL CONDITIONS

1. General

The Contractor shall furnish all tools, labor, equipment, materials and incidentals to complete all items of work for the construction of the project as set forth on the plans and in these contract documents in a manner described in these contract documents, general conditions, special conditions, and technical provisions.

Department of Transportation Specifications are to be utilized for all work except as modified by these specifications and provisions. Whatever reference is made to the "Standard" or the DOT Specifications it shall mean the Connecticut Department of Transportation Standard Specifications for Roads, Bridges, and Incidental Construction Form 816 (2004) as modified by Supplemental Specifications as issued by the Connecticut Department of Transportation.

In the DOT Specifications, references are made to "Engineer", "State", "Department", and other entities of the Department of Transportation. Wherever such references appear, substitute "Town of Mansfield, Connecticut".

The purpose and intent of citing Form 816 is to insure certain minimum standards of workmanship and quality of material. In case of conflict, these Contract Documents shall govern.

2. Sampling, Inspection and Testing of Materials

The Town reserves the right to test any material which previously had been tested and accepted, and to reject materials in transit or at the point of delivery which do not meet requirements of the specifications, which are contaminated, or which are damaged.

3. Safety

The Contractor shall comply with all requirements of the Occupational Safety and Health Act (OSHA). See also the safety provisions of the General Conditions.

4. Enumeration of Plans

The following plan sheets are hereby enumerated as part of these contract documents.

- Relocation of Decorative Street Light
- Details

5. Delays

The Town shall not be considered in default under this agreement or responsible for any delay resulting from threatening weather conditions, equipment accident or failure, strike or labor dispute, natural disaster, fuel shortage, material shortage, or delay due to any other circumstance beyond the control of the Town.

6. Protection of Existing Road and Facilities

Care shall be taken to insure that work does not in any way damage the existing facilities.

7. Prevailing Wage Rates

State of CT Prevailing Wage Rates are not required for this contract.

8. Hurricane Protection

Should hurricane warnings be issued, the Contractor shall take every precaution to minimize danger to persons, to the work and to adjacent property. These precautions shall include removing all loose materials, tools, and equipment from exposed locations, and removing all scaffolding and other temporary work.

9. Protection against High Water and Storm

The contractor shall take all precautions to prevent damage to work or equipment by high water or by storms. The Owner may prohibit the carrying out of work at any time when in his judgment high waters or storm conditions are unfavorable or unsuitable or at any time regardless of the weather when proper precautions are not being taken to safeguard previously constructed work or work in progress.

10. Lights, Barriers, Watchmen and Indemnity

The Contractor shall erect and maintain such barriers, lighting, warning lights, danger warning signals, and signs that will prevent accidents during the construction work and protect the work and insure the safety of personnel and the public at all times and places; the Contractor shall indemnify and protect the Owner and the Engineer in every respect from injury or damage whatsoever caused by any act of neglect by the Contractor or his subcontractors or their servants or agents, including any claim arising out of failure to erect and maintain sufficient railing or fence as required by Section 13A-111 Connecticut General Statutes from claims of defect in violation of 13A-149 Connecticut General Statutes.

11. Night Work

Night work shall be permitted provided the lighting, safety and other facilities which are deemed necessary shall be provided by the Contractor. Compensation for this work shall be considered as having been included in the prices stipulated for the appropriate items of work as listed in the bid, and no extra compensation will be paid by the Owner. Night work on Thursdays, Fridays, Saturdays, or holidays shall not be permitted.

12. Shoring

If shoring is required to safely excavate or work within an excavated area, according to OSHA regulations, the cost of the shoring materials, erection and removal shall be considered as having

been included in the prices stipulated for the appropriate items of work as listed in the bid, and no extra compensation will be paid by the owner.

13. Working Hours

Hours of Work shall be arranged in advance with the Town prior to the commencement of work.

14. Time of Completion

Bidder must agree to commence work within 10 days of the execution of this contract, and to fully complete all work prior to September 30, 2016 completion date for that project. Bidder must agree also to pay as liquidated damages, the sum of $50 for each calendar day beyond the aforementioned completion date (refer also to Section 1.08, ConnDOT Form 816, Prosecution and Progress in the Special Provisions) as hereinafter provided in the General Conditions.

15. Private Property/Construction of Adjoining Buildings

Attention is drawn to the fact that some of this work will take place adjacent to other building construction on private property. The greatest care shall be taken to avoid any trespass onto said private property without the express written permission of the owner. Any inadvertent damage to private property caused by the contractor shall be repaired to the satisfaction of the owner and shall be reported immediately to the Town of Mansfield Engineering representative.

16. Notice to Contractor - Permits/Permit Applications

The Contractor is hereby notified that all permit and permit applications contained herein shall be made a part of this contract. In the absence of the permit, the application shall be binding. If at the time the permit is received its contents differ from that which is outlined in the application, the permit shall govern. Should the permit be received after the receipt of bids and the permit requirements significantly changes the character of the work, adjustment will be made to the contract in accordance with the appropriate articles in Section 1.04, Form 816. The requirements and conditions set forth in the permit and permit application shall be binding on the Contractor just as any other specification.

17. Job Coordination Meetings

Job coordination meetings will be conducted during the project and a responsible representative of the contractor will be required to attend each meeting. The representative must be knowledgeable about contractor's work including knowledge of the design, status of materials and deliveries, and have the authority to make schedule commitments.

18. Phasing

There is no phasing for this project.

NOTICE TO CONTRACTOR: UTILITY SPECIFICATIONS

The contractor is hereby notified that all utility specifications contained elsewhere herein shall be made a part of this contract, and that the contractor shall be bound to comply with all requirements of such specifications. The requirements and conditions set forth in the subject specifications shall be binding on the contractor just as any other specification would be.

NOTICE TO CONTRACTOR: CONTRACTOR TRAINING REQUIREMENT FOR 10-HOUR OSHA CONSTRUCTION SAFETY AND HEALTH COURSE

In accordance with Connecticut General Statute 31-53b and Public Act No. 08-83, the Contractor is required to furnish proof that any person performing the work of a mechanic, laborer or worker pursuant to the classifications of labor under section 31-53, has completed a course of at least ten hours in duration in construction safety and health approved by the Federal Occupational Safety and Health Administration or, has completed a new miner training program approved by the Federal Mine Safety and Health Administration in accordance with 30 CFR 48 or, in the case of telecommunications employees, has completed at least ten hours of training in accordance with 29 CFR 1910.268.

Proof of compliance with the provisions of the statute shall consist of a student course completion card issued by the federal Occupational Safety and Health Administration, or other such proof as deemed appropriate by the Commissioner of the Connecticut Department of Labor, dated no earlier than five years prior to the commencement of the project. Each employer shall affix a copy of the construction safety course completion card for each applicable employee to the first certified payroll submitted to the Department of Transportation on which the employee's name first appears.

Any employee required to complete a construction safety and health course as required that has not completed the course, shall have a maximum of fourteen (14) days to complete the course. If the employee has not been brought into compliance, they shall be removed from the project until such time as they have completed the required training.

This section does not apply to employees of public service companies, as defined in section 16-1 of the 2008 supplement to the General Statutes, or drivers of commercial motor vehicles driving the vehicle on the public works project and delivering or picking up cargo from public works projects provided they perform no labor relating to the project other than the loading and unloading of their cargo.

The internet website for the federal Occupational Safety and Health Training Institute is http://www.osha.gov/fso/ote/training/edcenters.

Additional information regarding this statute can be found at the Connecticut Department of Labor website, http://www.ctdol.state.ct.us/wgwkstnd/wgemenu.htm.

Any costs associated with this notice shall be included in the general cost of the contract. In addition, there shall be no time granted to the contractor for compliance with this notice. The contractor's compliance with this notice and any associated regulations shall not be grounds for claims as outlined in Section 1.11 – "Claims".

NOTICE TO CONTRACTOR: NON-DISCRIMINATION

The following subsections are set forth here as required by section 4a-60 of the Connecticut General Statutes and specifically apply to this contract: Non-Discrimination

(a) For purposes of this Section, the following terms are defined as follows:

i. "Commission" means the Commission on Human Rights and Opportunities;

ii. "Contract" and “contract” include any extension or modification of the Contract or contract;

iii. "Contractor" and “contractor” include any successors or assigns of the Contractor or contractor;

iv. "Gender identity or expression" means a person's gender-related identity, appearance or behavior, whether or not that gender-related identity, appearance or behavior is different from that traditionally associated with the person's physiology or assigned sex at birth, which gender-related identity can be shown by providing evidence including, but not limited to, medical history, care or treatment of the gender-related identity, consistent and uniform assertion of the gender-related identity or any other evidence that the gender-related identity is sincerely held, part of a person's core identity or not being asserted for an improper purpose.

v. “good faith" means that degree of diligence which a reasonable person would exercise in the performance of legal duties and obligations;

vi. "good faith efforts" shall include, but not be limited to, those reasonable initial efforts necessary to comply with statutory or regulatory requirements and additional or substituted efforts when it is determined that such initial efforts will not be sufficient to comply with such requirements;

vii. "marital status" means being single, married as recognized by the State of Connecticut, widowed, separated or divorced;

viii. "mental disability" means one or more mental disorders, as defined in the most recent edition of the American Psychiatric Association's "Diagnostic and Statistical Manual of Mental Disorders", or a record of or regarding a person as having one or more such disorders;

ix. "minority business enterprise" means any small contractor or supplier of materials fifty-one percent or more of the capital stock, if any, or assets of which is owned by a person or persons: (1) who are active in the daily affairs of the enterprise, (2) who have the power to direct the management and policies of the enterprise, and (3) who are members of a minority, as such term is defined in subsection (a) of Connecticut General Statutes § 32-9n; and

x. "public works contract" means any agreement between any individual, firm or corporation and the State or any political subdivision of the State other than a municipality for construction, rehabilitation, conversion, extension, demolition or repair of a public building, highway or other changes or improvements in real property, or which is financed in whole or in part by the State, including, but not limited to, matching expenditures, grants, loans, insurance or guarantees.

For purposes of this Section, the terms "Contract" and “contract” do not include a contract where each contractor is (1) a political subdivision of the state, including, but not limited to, a municipality, (2) a quasi-public agency, as defined in Conn. Gen. Stat. Section 1-120, (3) any other state, including but not limited to any federally recognized Indian tribal governments, as defined in Conn. Gen. Stat. Section 1-267, (4) the federal government, (5) a foreign government, or (6) an agency of a subdivision, agency, state or government described in the immediately preceding enumerated items (1), (2), (3), (4) or (5).

(b) (1) The Contractor agrees and warrants that in the performance of the Contract such Contractor will not discriminate or permit discrimination against any person or group of persons on the grounds of race, color, religious creed, age, marital status, national origin, ancestry, sex, gender identity or expression, mental retardation, mental disability or physical disability, including, but not limited to, blindness, unless it is shown by such Contractor that such disability prevents performance of the work involved, in any manner prohibited by the laws of the United States or of the State of Connecticut; and the Contractor further agrees to take affirmative action to insure that applicants with job-related qualifications are employed and that employees are treated when employed without regard to their race, color, religious creed, age, marital status, national origin, ancestry, sex, gender identity or expression, mental retardation, mental disability or physical disability, including, but not limited to, blindness, unless it is shown by the Contractor that such disability prevents performance of the work involved; (2) the Contractor agrees, in all solicitations or advertisements for employees placed by or on behalf of the Contractor, to state that it is an "affirmative action-equal opportunity employer" in accordance with regulations adopted by the Commission; (3) the Contractor agrees to provide each labor union or representative of workers with which the Contractor has a collective bargaining Agreement or other contract or understanding and each vendor with which the Contractor has a contract or understanding, a notice to be provided by the Commission, advising the labor union or workers' representative of the Contractor's commitments under this section and to post copies of the notice in conspicuous places available to employees and applicants for employment; (4) the Contractor agrees to comply with each provision of this Section and Connecticut General Statutes §§ 46a-68e and 46a-68f and with each regulation or relevant order issued by said Commission pursuant to Connecticut General Statutes §§ 46a-56, 46a-68e and 46a-68f; and (5) the Contractor agrees to provide the Commission on Human Rights and Opportunities with such information requested by the Commission, and permit access to pertinent books, records and accounts, concerning the employment practices and procedures of the Contractor as relate to the provisions of this Section and Connecticut General Statutes § 46a-56. If the contract is a public works contract, the Contractor agrees and warrants that he will make good faith efforts to employ minority business enterprises as subcontractors and suppliers of materials on such public works projects.

(c) Determination of the Contractor's good faith efforts shall include, but shall not be limited to, the following factors: The Contractor's employment and subcontracting policies, patterns and practices; affirmative advertising, recruitment and training; technical assistance activities and such other reasonable activities or efforts as the Commission may prescribe that are designed to ensure the participation of minority business enterprises in public works projects.

(d) The Contractor shall develop and maintain adequate documentation, in a manner prescribed by the Commission, of its good faith efforts.

(e) The Contractor shall include the provisions of subsection (b) of this Section in every subcontract or purchase order entered into in order to fulfill any obligation of a contract with the State and such provisions shall be binding on a subcontractor, vendor or manufacturer unless exempted by regulations or orders of the Commission. The Contractor shall take such action with respect to any such subcontract or purchase order as the Commission may direct as a means of enforcing such provisions including sanctions for noncompliance in accordance with Connecticut General Statutes §46a-56; provided if such Contractor becomes involved in, or is threatened with, litigation with a subcontractor or vendor as a result of such direction by the Commission, the Contractor may request the State of

Connecticut to enter into any such litigation or negotiation prior thereto to protect the interests of the State and the State may so enter.

(f) The Contractor agrees to comply with the regulations referred to in this Section as they exist on the date of this Contract and as they may be adopted or amended from time to time during the term of this Contract and any amendments thereto.

(g)(1) The Contractor agrees and warrants that in the performance of the Contract such Contractor will not discriminate or permit discrimination against any person or group of persons on the grounds of sexual orientation, in any manner prohibited by the laws of the United States or the State of Connecticut, and that employees are treated when employed without regard to their sexual orientation; (2) the Contractor agrees to provide each labor union or representative of workers with which such Contractor has a collective bargaining Agreement or other contract or understanding and each vendor with which such Contractor has a contract or understanding, a notice to be provided by the Commission on Human Rights and Opportunities advising the labor union or workers' representative of the Contractor's commitments under this section, and to post copies of the notice in conspicuous places available to employees and applicants for employment; (3) the Contractor agrees to comply with each provision of this section and with each regulation or relevant order issued by said Commission pursuant to Connecticut General Statutes § 46a-56; and (4) the Contractor agrees to provide the Commission on Human Rights and Opportunities with such information requested by the Commission, and permit access to pertinent books, records and accounts, concerning the employment practices and procedures of the Contractor which relate to the provisions of this Section and Connecticut General Statutes § 46a-56.

(h) The Contractor shall include the provisions of the foregoing paragraph in every subcontract or purchase order entered into in order to fulfill any obligation of a contract with the State and such provisions shall be binding on a subcontractor, vendor or manufacturer unless exempted by regulations or orders of the Commission. The Contractor shall take such action with respect to any such subcontract or purchase order as the Commission may direct as a means of enforcing such provisions including sanctions for noncompliance in accordance with Connecticut General Statutes § 46a-56; provided, if such Contractor becomes involved in, or is threatened with, litigation with a subcontractor or vendor as a result of such direction by the Commission, the Contractor may request the State of Connecticut to enter into any such litigation or negotiation prior thereto to protect the interests of the State and the State may so enter.

NOTICE TO CONTRACTOR: EXECUTIVE ORDERS

The Agreement is subject to the provisions of Executive Order No. Three of Governor Thomas J. Meskill, promulgated June 16, 1971, concerning labor employment practices, Executive Order No. Seventeen of Governor Thomas J. Meskill, promulgated February 15, 1973, concerning the listing of employment openings and Executive Order No. Sixteen of Governor John G. Rowland promulgated August 4, 1999, concerning violence in the workplace, all of which are incorporated into and are made a part of the Agreement as if they had been fully set forth herein. At the contractor's request, TOWN shall provide a copy of these orders to the contractor. The Agreement may also be subject to Executive Order No. 7C of Governor M. Jodi Rell, promulgated July 13, 2006, concerning contracting reforms and Executive Order No. 14 of Governor M. Jodi Rell, promulgated April 17, 2006, concerning procurement of cleaning products and services, in accordance with their respective terms and conditions.

NOTICE TO CONTRACTOR: STATE ELECTION ENFORCEMENT COMMISSION (SEEC) CAMPAIGN CONTRIBUTION BAN

This Agreement is subject to the provisions of the State Election Enforcement Commission (SEEC) Campaign Contribution Ban. For all State Contracts as defined in P.A. 07-1 having a value in a calendar year of $50,000 or more or a combination or series of such agreements or contracts having a value of $100,000 or more, the authorized signatory to this Agreement expressly acknowledges receipt of the State Elections Enforcement Commission's notice advising state contractors of state campaign contribution and solicitation prohibitions, and will inform its principals of the contents of the notice. See SEEC Form (below):

CONNECTICUT STATE ELECTIONS ENFORCEMENT COMMISSION
Rev. 1/11

NOTICE TO EXECUTIVE BRANCH STATE CONTRACTORS AND PROSPECTIVE STATE CONTRACTORS OF CAMPAIGN CONTRIBUTION AND SOLICITATION LIMITATIONS

This notice is provided under the authority of Connecticut General Statutes §9-612(g)(2), as amended by P.A. 10-1, and is for the purpose of informing state contractors and prospective state contractors of the following law (italicized words are defined later).

CAMPAIGN CONTRIBUTION AND SOLICITATION LIMITATIONS

No *state contractor, prospective state contractor, principal of a state contractor or principal of a prospective state contractor,* with regard to a *state contract* or *state contract solicitation* with or from a state agency in the executive branch or a quasi-public agency or a holder, or principal of a holder of a valid prequalification certificate, shall make a contribution to (i) an exploratory committee or candidate committee established by a candidate for nomination or election to the office of Governor, Lieutenant Governor, Attorney General, State Comptroller, Secretary of the State or State Treasurer, (ii) a political committee authorized to make contributions or expenditures to or for the benefit of such candidates, or (iii) a party committee (which includes TOWN committees).

In addition, no holder or principal of a holder of a valid prequalification certificate, shall make a contribution to (i) an exploratory committee or candidate committee established by a candidate for nomination or election to the office of State senator or State representative, (ii) a political committee authorized to make contributions or expenditures to or for the benefit of such candidates, or (iii) a party committee.

On and after January 1, 2011, no state contractor, prospective state contractor, principal of a state contractor or principal of a prospective state contractor, with regard to a state contract or state contract solicitation with or from a state agency in the executive branch or a quasi-public agency or a holder, or principal of a holder of a valid prequalification certificate, shall knowingly solicit contributions from the state contractor's or prospective state contractor's employees or from a subcontractor or principals of the subcontractor on behalf of (i) an exploratory committee or candidate committee established by a candidate for nomination or election to the office of Governor, Lieutenant Governor, Attorney General, State Comptroller, Secretary of the State or State Treasurer, (ii) a political committee authorized to

make contributions or expenditures to or for the benefit of such candidates, or (iii) a party committee.

DUTY TO INFORM

State contractors and prospective state contractors are required to inform their principals of the above prohibitions, as applicable, and the possible penalties and other consequences of any violation thereof.

PENALTIES FOR VIOLATIONS

Contributions or solicitations of contributions made in violation of the above prohibitions may result in the following civil and criminal penalties:

Civil penalties—Up to $2,000 or twice the amount of the prohibited contribution, whichever is greater, against a principal or a contractor. Any state contractor or prospective state contractor which fails to make reasonable efforts to comply with the provisions requiring notice to its principals of these prohibitions and the possible consequences of their violations may also be subject to civil penalties of up to $2,000 or twice the amount of the prohibited contributions made by their principals.

Criminal penalties—Any knowing and willful violation of the prohibition is a Class D felony, which may subject the violator to imprisonment of not more than 5 years, or not more than $5,000 in fines, or both.

CONTRACT CONSEQUENCES

In the case of a state contractor, contributions made or solicited in violation of the above prohibitions may result in the contract being voided.

In the case of a prospective state contractor, contributions made or solicited in violation of the above prohibitions shall result in the contract described in the state contract solicitation not being awarded to the prospective state contractor, unless the State Elections Enforcement Commission determines that mitigating circumstances exist concerning such violation.

The State shall not award any other state contract to anyone found in violation of the above prohibitions for a period of one year after the election for which such contribution is made or solicited, unless the State Elections Enforcement Commission determines that mitigating circumstances exist concerning such violation.

Additional information may be found on the website of the State Elections Enforcement Commission, www.ct.gov/seec. Click on the link to "Lobbyist/Contractor Limitations."

DEFINITIONS

"State contractor" means a person, business entity or nonprofit organization that enters into a state contract. Such person, business entity or nonprofit organization shall be deemed to be a state contractor until December thirty-first of the year in which such contract terminates. "State contractor" does not

include a municipality or any other political subdivision of the state, including any entities or associations duly created by the municipality or political subdivision exclusively amongst themselves to further any purpose authorized by statute or charter, or an employee in the executive or legislative branch of state government or a quasi-public agency, whether in the classified or unclassified service and full or part-time, and only in such person's capacity as a state or quasi-public agency employee.

"Prospective state contractor" means a person, business entity or nonprofit organization that (i) submits a response to a state contract solicitation by the state, a state agency or a quasi-public agency, or a proposal in response to a request for proposals by the state, a state agency or a quasi-public agency, until the contract has been entered into, or (ii) holds a valid prequalification certificate issued by the Commissioner of Administrative Services under section 4a-100. "Prospective state contractor" does not include a municipality or any other political subdivision of the state, including any entities or associations duly created by the municipality or political subdivision exclusively amongst themselves to further any purpose authorized by statute or charter, or an employee in the executive or legislative branch of state government or a quasi-public agency, whether in the classified or unclassified service and full or part-time, and only in such person's capacity as a state or quasi-public agency employee.

"Principal of a state contractor or prospective state contractor" means (i) any individual who is a member of the board of directors of, or has an ownership interest of five per cent or more in, a state contractor or prospective state contractor, which is a business entity, except for an individual who is a member of the board of directors of a nonprofit organization**,** (ii) an individual who is employed by a state contractor or prospective state contractor, which is a business entity, as president, treasurer or executive vice president, (iii) an individual who is the chief executive officer of a state contractor or prospective state contractor, which is not a business entity, or if a state contractor or prospective state contractor has no such officer, then the officer who duly possesses comparable powers and duties, (iv) an officer or an employee of any state contractor or prospective state contractor who has *managerial or discretionary responsibilities with respect to a state contract*, (v) the spouse or a *dependent child* who is eighteen years of age or older of an individual described in this subparagraph, or (vi) a political committee established or controlled by an individual described in this subparagraph or the business entity or nonprofit organization that is the state contractor or prospective state contractor.

"State contract" means an agreement or contract with the state or any state agency or any quasi-public agency, let through a procurement process or otherwise, having a value of fifty thousand dollars or more, or a combination or series of such agreements or contracts having a value of one hundred thousand dollars or more in a calendar year, for (i) the rendition of services, (ii) the furnishing of any goods, material, supplies, equipment or any items of any kind, (iii) the construction, alteration or repair of any public building or public work, (iv) the acquisition, sale or Agreement of any land or building, (v) a licensing arrangement, or (vi) a grant, loan or loan guarantee. "State contract" does not include any agreement or contract with the state, any state agency or any quasi-public agency that is exclusively federally funded, an education loan, a loan to an individual for other than commercial purposes or any agreement or contract between the state or any state agency and the United States Department of the Navy or the United States Department of Defense.

"State contract solicitation" means a request by a state agency or quasi-public agency, in whatever form issued, including, but not limited to, an invitation to bid, request for proposals, request for information or request for quotes, inviting bids, quotes or other types of submittals, through a competitive

procurement process or another process authorized by law waiving competitive procurement.

"Managerial or discretionary responsibilities with respect to a state contract" means having direct, extensive and substantive responsibilities with respect to the negotiation of the state contract and not peripheral, clerical or ministerial responsibilities.

"Dependent child" means a child residing in an individual's household who may legally be claimed as a dependent on the federal income tax of such individual.

"Solicit" means (A) requesting that a contribution be made, (B) participating in any fund-raising activities for a candidate committee, exploratory
committee, political committee or party committee, including, but not limited to, forwarding tickets to potential contributors, receiving contributions for transmission to any such committee or bundling contributions, (C) serving as chairperson, treasurer or deputy treasurer of any such committee, or (D) establishing a political committee for the sole purpose of soliciting or receiving contributions for any committee. Solicit does not include: (i) making a contribution that is otherwise permitted by Chapter 155 of the Connecticut General Statutes; (ii) informing any person of a position taken by a candidate for public office or a public official, (iii) notifying the person of any activities of, or contact information for, any candidate for public office; or (iv) serving as a member in any party committee or as an officer of such committee that is not otherwise prohibited in this section.

"Subcontractor" means any person, business entity or nonprofit organization that contracts to perform part or all of the obligations of a state contractor's state contract. Such person, business entity or nonprofit organization shall be deemed to be a subcontractor until December thirty first of the year in which the subcontract terminates. "Subcontractor" does not include (i) a municipality or any other political subdivision of the state, including any entities or associations duly created by the municipality or political subdivision exclusively amongst themselves to further any purpose authorized by statute or charter, or (ii) an employee in the executive or legislative branch of state government or a quasi-public agency, whether in the classified or unclassified service and full or part-time, and only in such person's capacity as a state or quasi-public agency employee.

"Principal of a subcontractor" means (i) any individual who is a member of the board of directors of, or has an ownership interest of five per cent or more in, a subcontractor, which is a business entity, except for an individual who is a member of the board of directors of a nonprofit organization, (ii) an individual who is employed by a subcontractor, which is a business entity, as president, treasurer or executive vice president, (iii) an individual who is the chief executive officer of a subcontractor, which is not a business entity, or if a subcontractor has no such officer, then the officer who duly possesses comparable powers and duties, (iv) an officer or an employee of any subcontractor who has managerial or discretionary responsibilities with respect to a subcontract with a state contractor, (v) the spouse or a dependent child who is eighteen years of age or older of an individual described in this subparagraph, or (vi) a political committee established or controlled by an individual described in this subparagraph or the business entity or nonprofit organization that is the subcontractor.

Date: _____
Town: Mansfield
6FR Part 31.