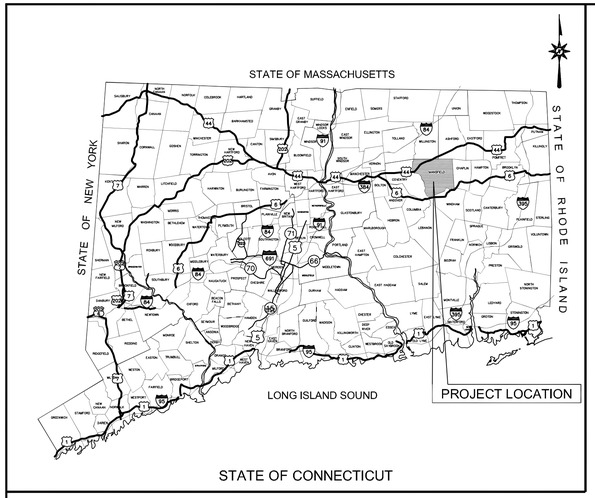

LOCATION MAP

N.T.S.

ZONING PERMIT APPLICATION
FOR
VILLAGE STREET and TRANSIT PATHWAYS
TOWN OF MANSFIELD, CONNECTICUT

VILLAGE ST. NORTH STA 100+22 TO STA 107+03

VILLAGE ST. SOUTH STA 130+00 TO STA 140+71

BOLTON ROAD EXTENSION STA 110+16 TO STA 111+76

DOG LANE CONNECTOR STA 120+00 TO STA 125+50

TOTAL ROADWAY LENGTH = 2462 FEET

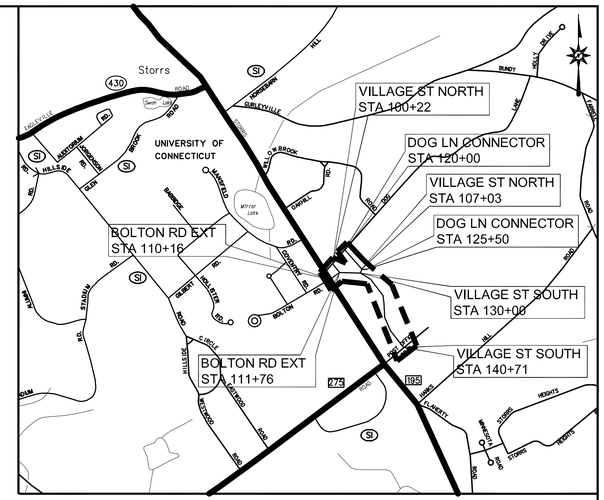

VICINITY MAP

SCALE: 1"=1000'

2004 STATE OF CONNECTICUT DEPARTMENT OF TRANSPORTATION STANDARD SPECIFICATIONS FOR ROADS, BRIDGES AND INCIDENTAL CONSTRUCTION FORM 816, INCLUDING ALL SUPPLEMENTS (LATEST REVISION JULY 2010).

ALL HORIZONTAL GEOMETRY ON THIS PROJECT BASED ON NAD83.

ALL ELEVATIONS ON THIS PROJECT BASED ON NAVD88.

DESIGN STANDARDS:
CONNECTICUT DEPARTMENT OF TRANSPORTATION HIGHWAY DESIGN MANUAL, 2003 EDITION.

A POLICY ON GEOMETRIC DESIGN OF HIGHWAYS AND STREETS 2001 EDITION, PUBLISHED BY THE AMERICAN ASSOCIATION OF STATE HIGHWAY AND TRANSPORTATION OFFICIALS (AASHTO).

TOWN OF MANSFIELD'S "STORRS CENTER SPECIAL DESIGN DISTRICT DESIGN GUIDELINES PURSUANT TO MANSFIELD ZONING REGULATIONS".

CONTENTS

TITLE SHEET

VILLAGE STREET AND TRANSIT PATHWAYS PLANS

INX-1	INDEX PLAN
TYP-1	TYPICAL CROSS SECTIONS
MDS-1,2,3,4,5	MISC. DETAIL SHEET
HZL-1,2,3	HORIZONTAL LAYOUT PLANS
HWY-1,2,3	ROADWAY CONSTRUCTION PLANS
GDR-1,2,3	GRADING AND DRAINAGE PLANS
UTL-1,2,3	UTILITY CONSTRUCTION PLANS
LDS-1,2,3,4,5	LANDSCAPE AND LIGHTING PLANS AND DETAILS
SPM-1,2,3,4	SIGNING AND PAVEMENT MARKINGS PLANS
EC-1,2,3,4	SEDIMENTATION AND EROSION CONTROL PLANS

DOG LANE CONNECTOR PLANS

HZL-1	HORIZONTAL LAYOUT PLAN
HWY-1	ROADWAY CONSTRUCTION PLAN
GDR-1	GRADING AND DRAINAGE PLAN
UTL-1	UTILITY CONSTRUCTION PLAN

STANDARD STATE OF CONNECTICUT DEPARTMENT OF TRANSPORTATION DETAILS

HW-507-01	TYPE "C", C-L" & DROP INLET CATCH BASINS
HW-507-07	TYPE "C", C-L" CATCH BASIN TOPS AND CURBS
HW-507-08	CATCH BASIN FRAMES AND GRATES
HW-507-10	MANHOLE - FRAME & COVER
HW-651-01	TYP. CCM PIPE INS. IN EARTH & ROCK SLOPES & BEDDING FOR CULVERTS
HW-751-01	UNDERDRAINS AND UNDERDRAIN OUTLETS
HW-811-01	CURBING
HW-822-01	TEMPORARY PRECAST CONCRETE BARRIER CURB
HW-921-01	DRIVEWAY RAMPS AND SIDEWALKS
HW-921-02	SIDEWALK RAMPS

PREPARED FOR:

TOWN OF MANSFIELD
4 SOUTH EAGLEVILLE ROAD
STORRS-MANSFIELD, CONNECTICUT 06268

PREPARED BY:

BL Companies

ARCHITECTURE ENGINEERING PLANNING LANDSCAPE ARCHITECTURE
LAND SURVEYING ENVIRONMENTAL SCIENCES

355 RESEARCH PARKWAY
MERIDEN, CONNECTICUT 06450
(203) 630-1406
(203) 630-2615 Fax

FOR PERMITTING PURPOSES ONLY
NOT RELEASED FOR CONSTRUCTION

DATES

ISSUE DATE: SEPTEMBER 15, 2011
REVISION:

CAD FILE: TTSH10C355001

THESE DRAWINGS SHALL NOT BE UTILIZED BY ANY PERSON, FIRM OR CORPORATION WITHOUT THE SPECIFIC WRITTEN PERMISSION OF BL COMPANIES

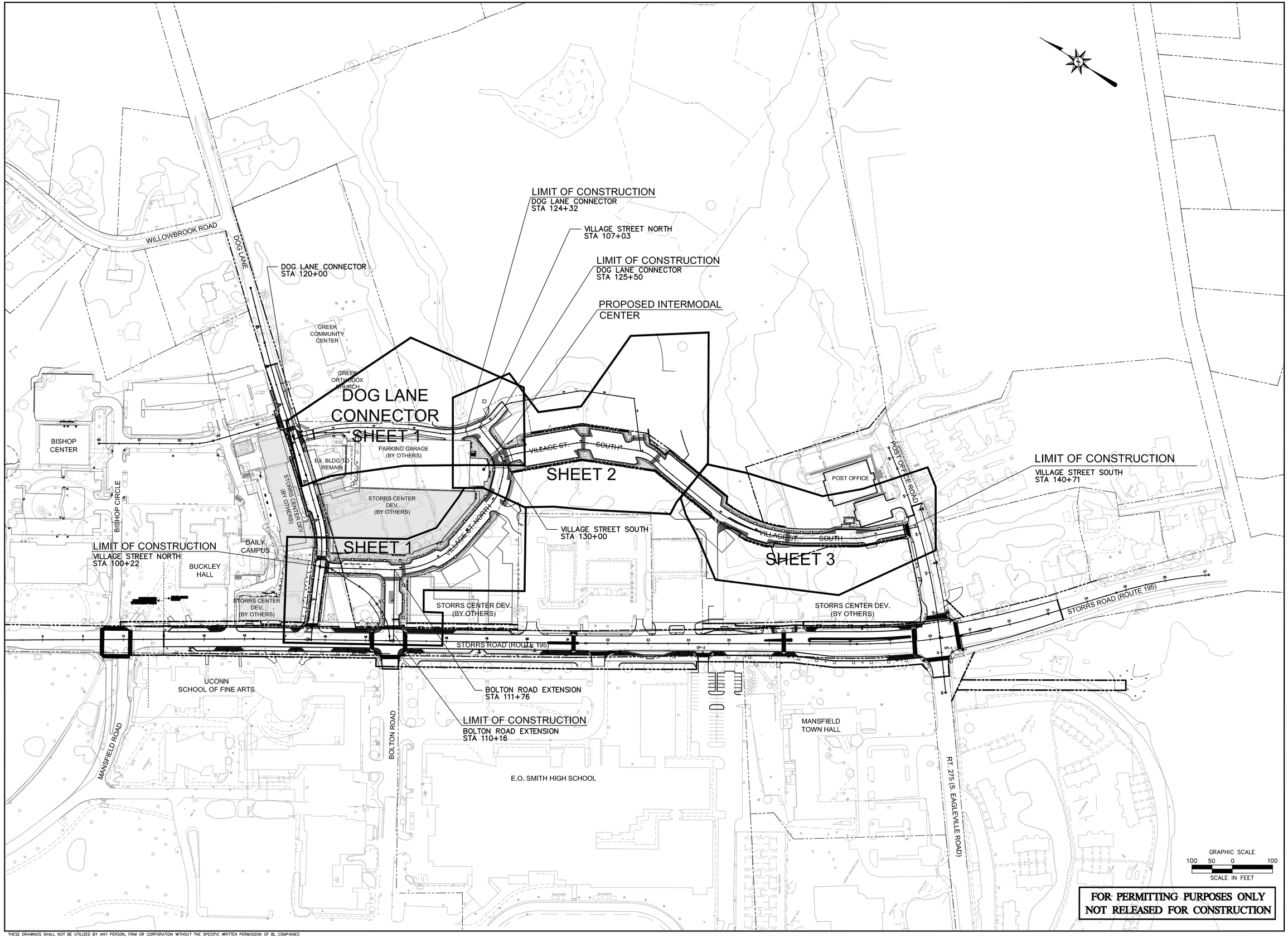

BL Companies

ARCHITECTURE
ENGINEERING
PLANNING
LANDSCAPE ARCHITECTURE
LAND SURVEYING
ENVIRONMENTAL SCIENCES

355 Research Parkway
Meriden, CT 06450
(203) 630-1406
(203) 630-2615 Fax

VILLAGE STREET AND TRANSIT PATHWAYS

VILLAGE STREET
MANSFIELD, CONNECTICUT

REVISIONS

No.	Date	Desc.

Designed	D.K.P.
Drawn	E.L.Z.
Checked	
Approved	
Scale	1"=100'
Project No.	10C3550
Date	8/15/11
CAD File	TINX10C355001

Title

INDEX PLAN

Sheet No.

INX-1

Xref (s): ; XR03C667001 ; XR08C3079B01 ; XR08C3079B02 ; XR08C293701 ; XR03C667001 ; XC03C667001 ; XR03C667001 ; XC03C667001 ; BD10C355001 ; XR10C355001

Sep 15, 2011 1:13pm EZelazny K:\obs03\03c667\dwg\TINX10C355001.dwg
Layout: INX--1 24X36 100sc

THESE DRAWINGS SHALL NOT BE UTILIZED BY ANY PERSON, FIRM OR CORPORATION WITHOUT THE SPECIFIC WRITTEN PERMISSION OF BL COMPANIES

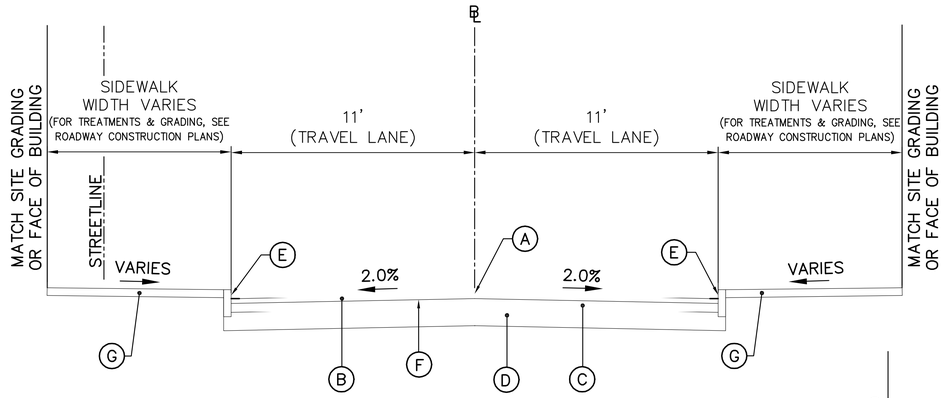

VILLAGE STREET

STATION 100+00 TO 107+00
STATION 130+00 TO 141+00

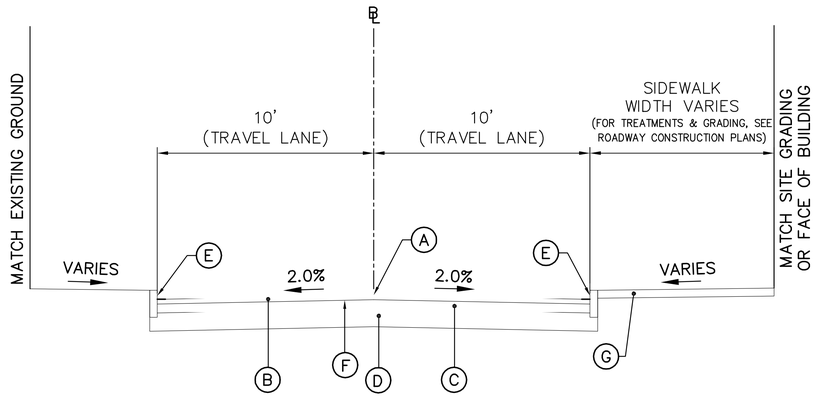

DOG LANE CONNECTION

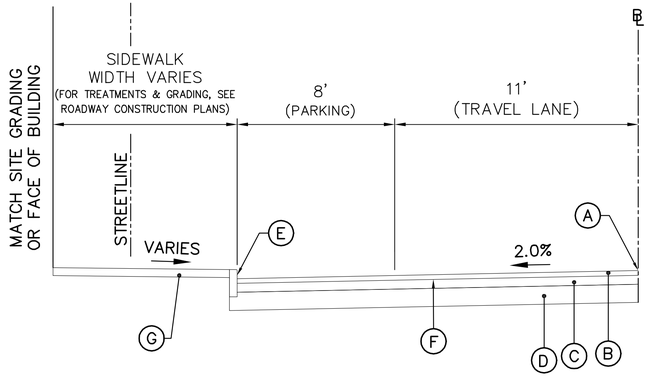

PARTIAL SECTION WITH PARALLEL
PARKING VILLAGE STREET

STATION 100+00 TO 105+00

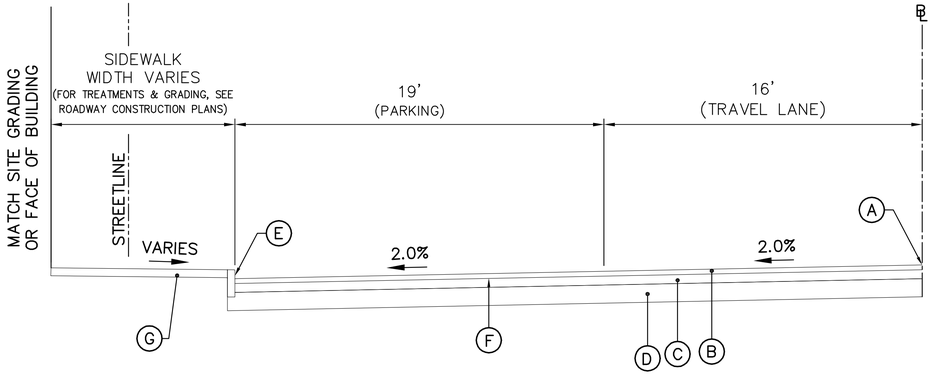

PARTIAL SECTION WITH ANGLED
PARKING VILLAGE STREET

STATION 130+00 TO 136+00

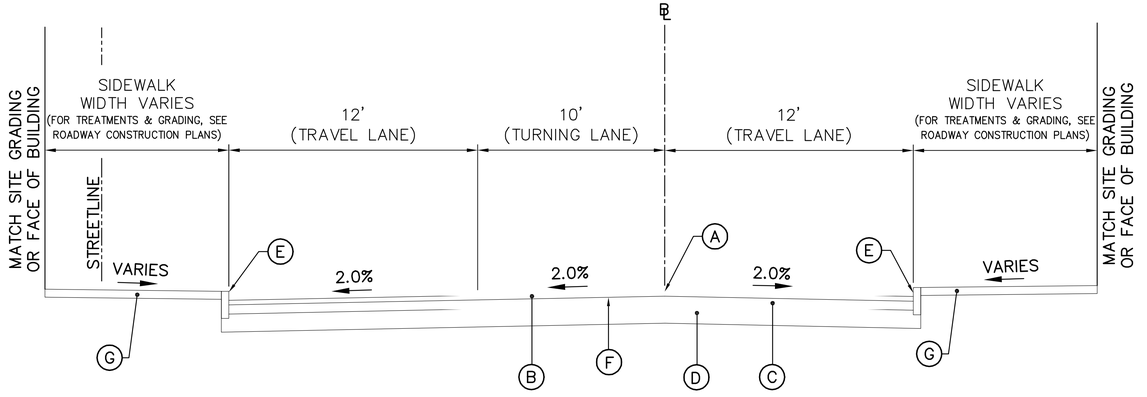

BOLTON ROAD EXTENSION

LEGEND

- (A) POINT OF APPLICATION AT GRADE
- (B) 1.5" HMA S0.375
- (C) 4" HMA S1.0 (PLACED IN ONE LIFT)
- (D) 14" SUBBASE
- (E) 5" GRANITE STONE CURBING (4" REVEAL)
- (F) MATERIAL FOR TACK COAT
- (G) SIDEWALK (FOR TYPE, WIDTH AND LOCATION SEE ROADWAY CONSTRUCTION PLANS)

**FOR PERMITTING PURPOSES ONLY
NOT RELEASED FOR CONSTRUCTION**

BL Companies
ARCHITECTURE
ENGINEERING
PLANNING
LANDSCAPE ARCHITECTURE
LAND SURVEYING
ENVIRONMENTAL SCIENCES

355 Research Parkway
Meriden, CT 06450
(203) 630-1406
(203) 630-2615 Fax

VILLAGE STREET AND TRANSIT PATHWAYS

VILLAGE STREET
MANSFIELD, CONNECTICUT

REVISIONS
No. Date Desc.

Designed	J.I.G.
Drawn	J.I.G.
Checked	
Approved	
Scale	N.T.S.
Project No.	10C3550
Date	8/15/11
CAD File	TTYP10C355001

Title
VILLAGE STREET
TYPICAL
CROSS SECTIONS

Sheet No.
TYP-1

Xref (s): ; B010C355001

Sep 15, 2011 1:15pm EZelazny K:\Jobs\03\03c667\dwg\TTYP10C355001.dwg
Layout: TYP-1 24X36

THESE DRAWINGS SHALL NOT BE UTILIZED BY ANY PERSON, FIRM OR CORPORATION WITHOUT THE SPECIFIC WRITTEN PERMISSION OF BL COMPANIES

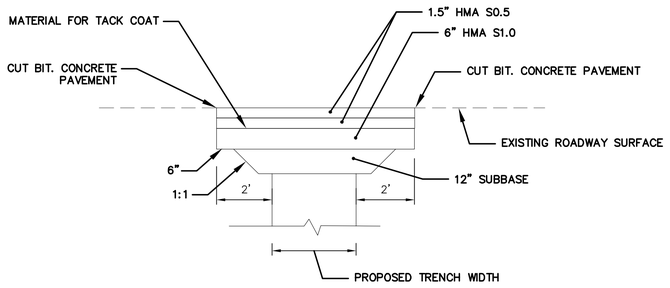

TRENCH REPAIR FOR STORM SEWER

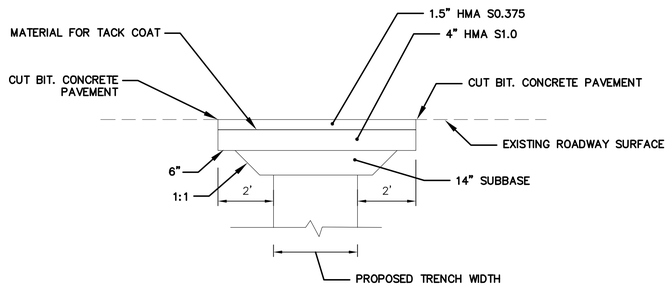

TRENCH REPAIR FOR STORM SEWER

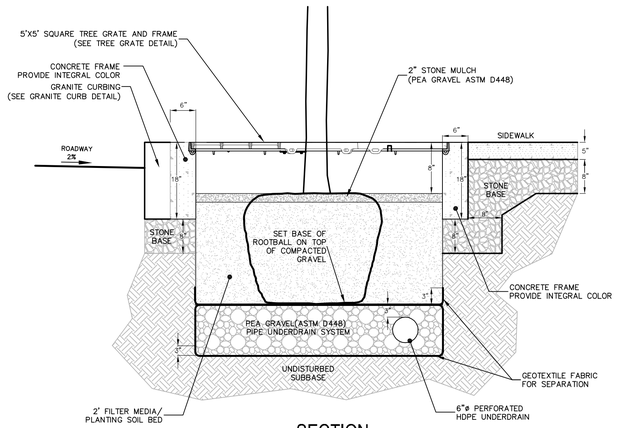

NOTE: CONCRETE 28 DAY MINIMUM COMPRESSIVE STRENGTH = 3000 psi

SECTION

TREE GRATE SYSTEM
(STATE PROJECT NO.S 77-223 & 77-227)

N.T.S

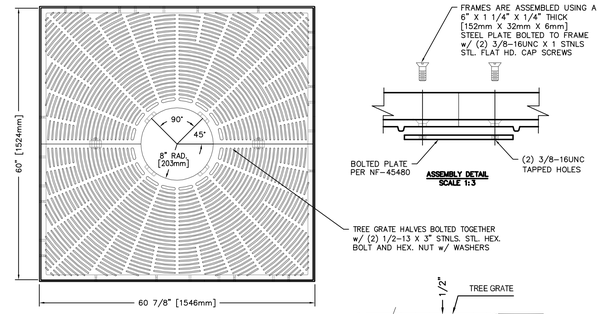

R-8713
5'-0" SQUARE TREE GRATE & FRAME
NEENAH FOUNDRY COMPANY NEENAH WISCONSIN 54956
NF-8713 095B

SPECIFICATIONS:
NOTE: FRAME CROSS BAR REQUIRES REMOVAL AFTER INSTALLATION.
ALL DIMENSIONS ARE SHOWN IN ENGLISH AND (METRIC)
COMPONENT NO'S: (4) 5'-0" FRAME 8500-6060; (2) TREE GRATE 8713-0006
MATERIAL: CAST GRAY IRON ASTM A-48, CLASS 35B
FINISH: NOT PAINTED
WEIGHT: 500#/SET

TREE GRATE DETAIL
(STATE PROJECT NO. 77-227)

N.T.S

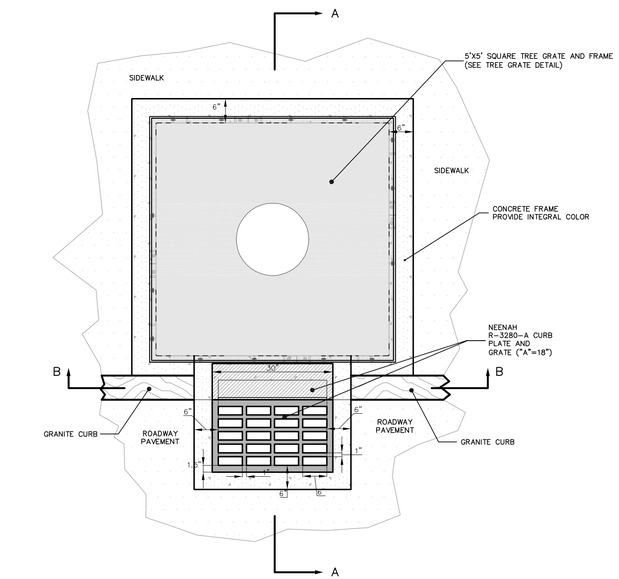

PLAN VIEW

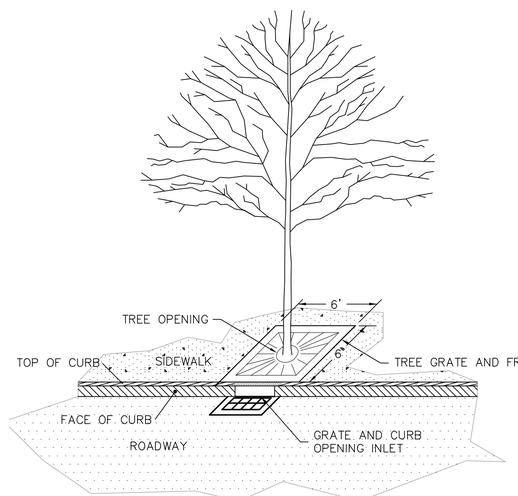

SCHEMATIC

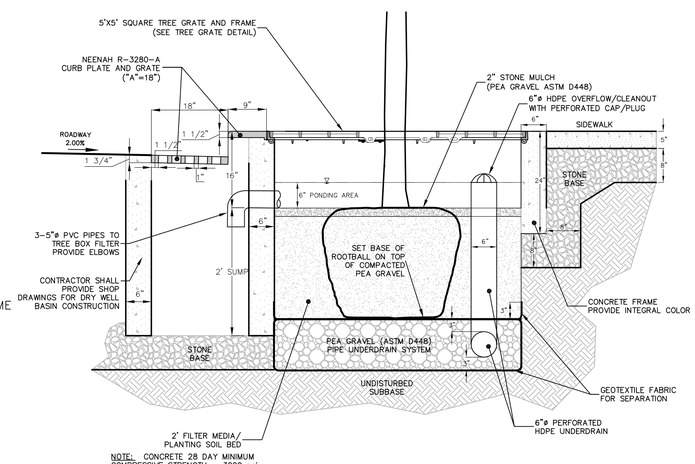

NOTE: CONCRETE 28 DAY MINIMUM COMPRESSIVE STRENGTH = 3000 psi

CROSS SECTION A-A

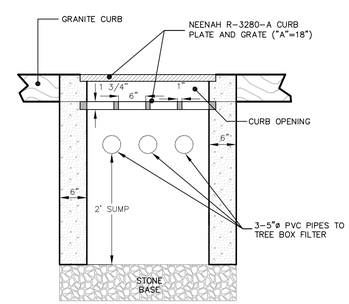

CROSS SECTION B-B

ROADSIDE TREE BOX FILTER

FOR PERMITTING PURPOSES ONLY
NOT RELEASED FOR CONSTRUCTION

BL Companies
ARCHITECTURE
ENGINEERING
PLANNING
LANDSCAPE ARCHITECTURE
LAND SURVEYING
ENVIRONMENTAL SCIENCES

355 Research Parkway
Meriden, CT 06450
(203) 630-1406
(203) 630-2615 Fax

VILLAGE STREET AND TRANSIT PATHWAYS
VILLAGE STREET
MANSFIELD, CONNECTICUT

REVISIONS
No. Date Desc.

Designed	S.K.B.
Drawn	E.L.Z.
Checked	
Approved	
Scale	N.T.S.
Project No.	10C3550
Date	8/15/11
CAD File	TMDS10C355001

Title
MISC. DETAIL SHEET

Sheet No.
MDS-1

Xref (s): ; B10\C355001

Sep 15, 2011 12:54pm EZelazny K:\obs03\03s667\dwg\TMDS10C355001.dwg
Layout: MDS-1 24X36

THESE DRAWINGS SHALL NOT BE UTILIZED BY ANY PERSON, FIRM OR CORPORATION WITHOUT THE SPECIFIC WRITTEN PERMISSION OF BL COMPANIES

NOTE:
1. THE COST OF ALL SAWCUT CONTROL JOINTS SHALL BE INCLUDED IN THE COST OF THE COLORED CONCRETE PAVEMENT AND CONCRETE PAVEMENT. NO ADDITIONAL PAYMENT WILL BE MADE.

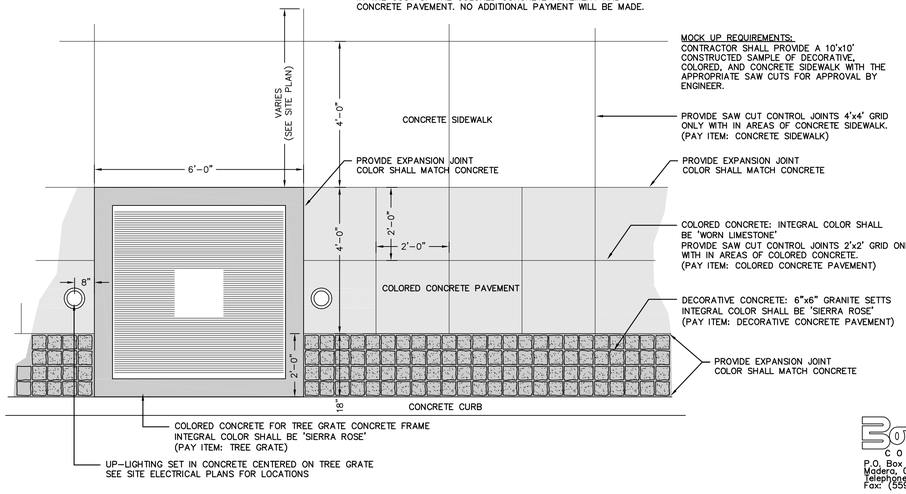

SPECIAL TREATMENT AREAS - DECORATIVE, COLORED, AND CONCRETE SIDEWALK WITH CONTROL JOINT LAYOUT

N.T.S

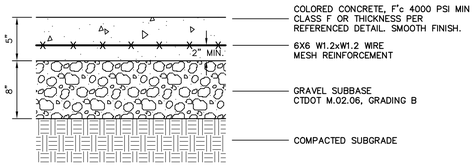

NOTE:
1. SAW CUT CONTROL JOINTS ON 2'x2' GRID ADJACENT TO STAMPED CONCRETE AREA OR AS INDICATED ON PLANS.

2. BOMANITE INTEGRAL COLOR SHALL BE "WORN LIMESTONE"

COLORED CONCRETE

N.T.S

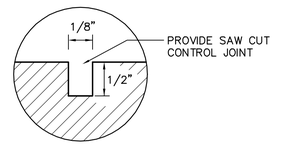

CONTROL JOINT
N.T.S.

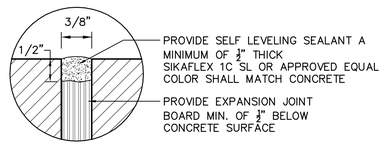

EXPANSION JOINT
N.T.S.

CONTROL AND EXPANSION JOINT DETAIL FOR CONCRETE WORK

N.T.S

Bomanite CORPORATION
P.O. Box 559
Madera, CA 93639-0559
Telephone: (559) 673-2411
Fax: (559) 673-8248

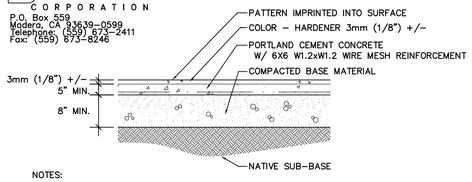

NOTES:
1. PLEASE CONTACT LOCAL BOMANITE CONTRACTOR OR BOMANITE CORPORATION FOR DETAILS REGARDING TOPPINGS.

DECORATIVE CONCRETE

N.T.S

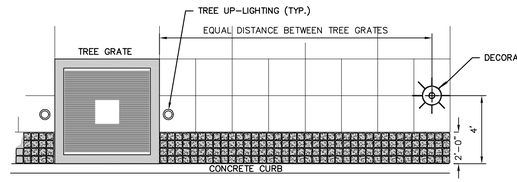

TYPICAL CONDITION UNLESS OTHERWISE SHOWN ON SITE PLAN

DECORATIVE LIGHT LAYOUT

N.T.S

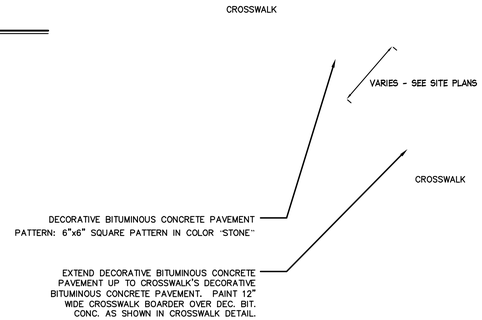

SITE LAYOUT

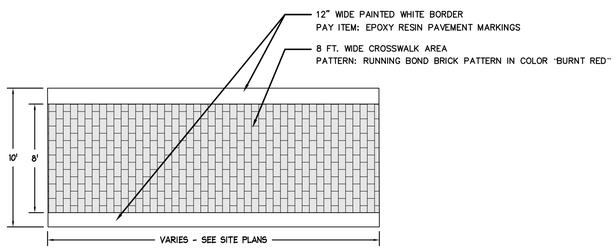

CROSSWALK DETAIL

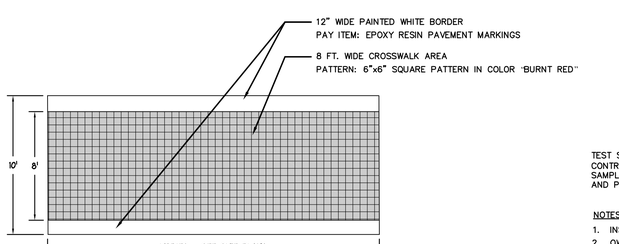

CROSSWALK DETAIL

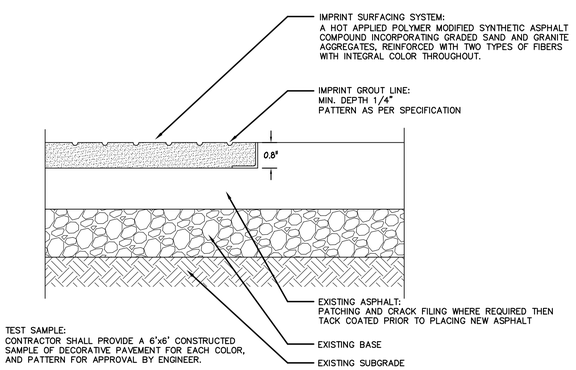

TEST SAMPLE:
CONTRACTOR SHALL PROVIDE A 6'x6' CONSTRUCTED SAMPLE OF DECORATIVE PAVEMENT FOR EACH COLOR, AND PATTERN FOR APPROVAL BY ENGINEER.

NOTES:
1. INSTALLATION TO BE COMPLETED IN ACCORDANCE WITH MANUFACTURER'S SPECIFICATIONS.
2. OWNER OR ENGINEER SHALL APPROVE PATTERN AND TEXTURE PRIOR TO INSTALLATION.
3. OWNER OR ENGINEER SHALL APPROVE COLOR PRIOR TO INSTALLATION.

DECORATIVE BITUMINOUS CONCRETE (CROSSWALK)

N.T.S.

PAY ITEM: DECORATIVE BITUMINOUS CONCRETE

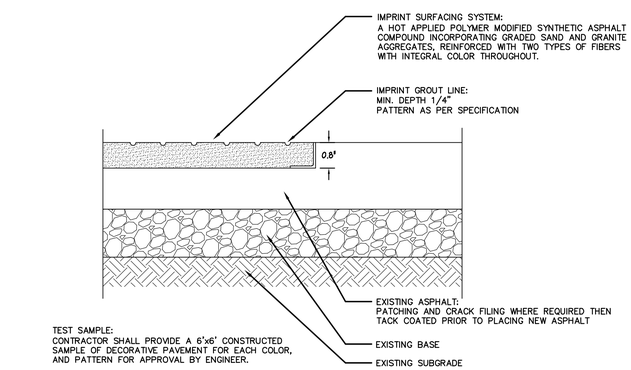

TEST SAMPLE:
CONTRACTOR SHALL PROVIDE A 6'x6' CONSTRUCTED SAMPLE OF DECORATIVE PAVEMENT FOR EACH COLOR, AND PATTERN FOR APPROVAL BY ENGINEER.

NOTES:
1. INSTALLATION TO BE COMPLETED IN ACCORDANCE WITH MANUFACTURER'S SPECIFICATIONS.
2. OWNER OR ENGINEER SHALL APPROVE PATTERN AND TEXTURE PRIOR TO INSTALLATION.
3. OWNER OR ENGINEER SHALL APPROVE COLOR PRIOR TO INSTALLATION.

DECORATIVE BITUMINOUS CONCRETE

N.T.S.

PAY ITEM: DECORATIVE BITUMINOUS CONCRETE

FOR PERMITTING PURPOSES ONLY NOT RELEASED FOR CONSTRUCTION

BL Companies
ARCHITECTURE
ENGINEERING
PLANNING
LANDSCAPE ARCHITECTURE
LAND SURVEYING
ENVIRONMENTAL SCIENCES

355 Research Parkway
Meriden, CT 06450
(203) 630-1406
(203) 630-2615 Fax

VILLAGE STREET AND TRANSIT PATHWAYS
VILLAGE STREET
MANSFIELD, CONNECTICUT

REVISIONS
No. Date Desc.

Designed	S.K.B.
Drawn	E.L.Z.
Checked	
Approved	
Scale	N.T.S.
Project No.	10C3550
Date	8/15/11
CAD File	TMDS10C355001

Title
MISC. DETAIL SHEET

Sheet No.
MDS-2

Xref (s): : B010C355001

Sep 15, 2011 12:54pm EZelazny K:\obs03\03s667\dwg\TMDS10C355001.dwg
Layout: MDS-2 24X36

THESE DRAWINGS SHALL NOT BE UTILIZED BY ANY PERSON, FIRM OR CORPORATION WITHOUT THE SPECIFIC WRITTEN PERMISSION OF BL COMPANIES

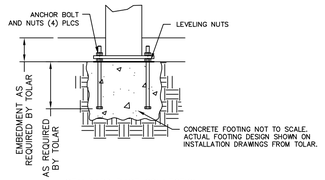

STANDARD BASE CONNECTION

MODEL:
TOLAR MANUFACTURING COMPANY INC.
SIERRA DOME ROOF TRANSIT SHELTER
SIZE: 5'x17'
COLOR: BLACK
ROOF: DECORATIVE BATTENS
PANELS: PERFORATED HERRINGBONE PATTERN
POSTS: PROVIDE ESCUTCHEONS

BUS SHELTER

N.T.S.

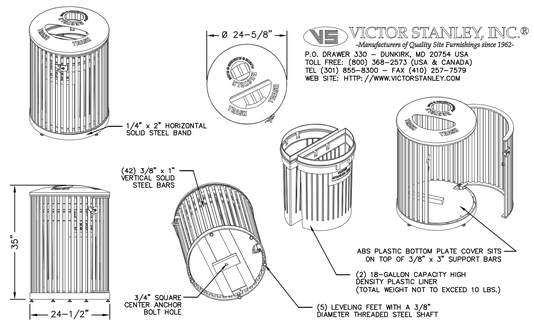

VICTOR STANLEY, INC.®
Manufacturers of Quality Site Furnishings since 1962
P.O. DRAWER 330 – DUNKIRK, MD 20754 USA
TOLL FREE: (800) 368-2573 (USA & CANADA)
TEL (301) 855-8300 – FAX (410) 257-7579
WEB SITE: HTTP://WWW.VICTORSTANLEY.COM

NSDC-36
STEELSITES™ SERIES

36-GALLON SIDE-DOOR-OPENING LITTER RECEPTACLE
COLOR: BLACK
PROVIDE RECYCLE LID (DUAL-FLOW)
PROVIDE HALF-MOON LINERS WITH ABS BOTTOM PLATE

NOTES:
1. DRAWINGS NOT TO SCALE. DO NOT SCALE DRAWINGS.
2. ALL FABRICATED METAL COMPONENTS SHALL BE STEEL SHOTBLASTED, ETCHED, PHOSPHATIZED, PREHEATED, AND ELECTROSTATICALLY POWDER-COATED WITH T.G.I.C. POLYESTER POWDER COATINGS. PRODUCTS ARE FULLY CLEANED AND PRETREATED, PREHEATED AND COATED WHILE HOT TO FILL CREVICES AND BUILD FILM COATING. COATED PARTS ARE THEN FULLY CURED TO COATING MANUFACTURER'S SPECIFICATIONS. THE THICKNESS OF THE RESULTING FINISH AVERAGES 8-10 MILS (200-250 MICRONS).
3. PROVIDE OIL IMPREGNATED BRONZE BUSHINGS AND STAINLESS STEEL PIVOT PINS FOR DOOR MOVEMENT, STANDARD 3/16" SOLID STEEL LATCH ASSEMBLY.
4. ANCHOR BOLT NOT PROVIDED BY VICTOR STANLEY, INC.

TRASH RECEPTACLE

N.T.S

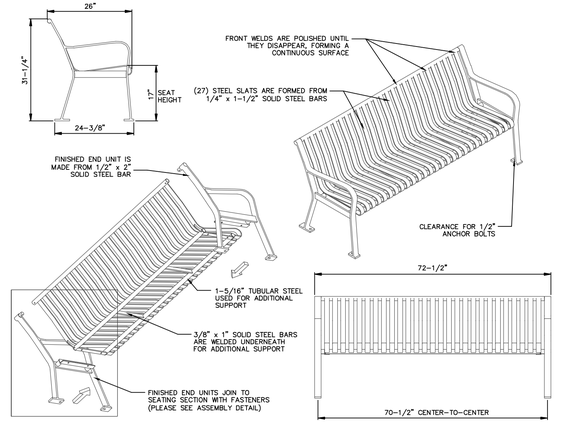

VICTOR STANLEY, INC.®
Manufacturers of Quality Site Furnishings since 1962
P.O. DRAWER 330 – DUNKIRK, MD 20754 USA
TOLL FREE: (800) 368-2573 (USA & CANADA)
TEL (301) 855-8300 – FAX (410) 257-7579
WEB SITE: HTTP://WWW.VICTORSTANLEY.COM

NOTES:
1. DRAWINGS NOT TO SCALE. DO NOT SCALE DRAWINGS.
2. ALL FABRICATED METAL COMPONENTS SHALL BE STEEL SHOTBLASTED, ETCHED, PHOSPHATIZED, PREHEATED, AND ELECTROSTATICALLY POWDER-COATED WITH T.G.I.C. POLYESTER POWDER COATINGS. PRODUCTS ARE FULLY CLEANED AND PRETREATED, PREHEATED AND COATED WHILE HOT TO FILL CREVICES AND BUILD COATING FILM. COATED PARTS ARE THEN FULLY CURED TO COATING MANUFACTURER'S SPECIFICATIONS. THE THICKNESS OF THE RESULTING FINISH AVERAGES 8-10 MILS (200-250 MICRONS).
3. IT IS NOT RECOMMENDED TO LOCATE ANCHOR BOLTS UNTIL BENCH IS IN PLACE.
4. ANCHOR BOLTS NOT PROVIDED BY VICTOR STANLEY, INC.

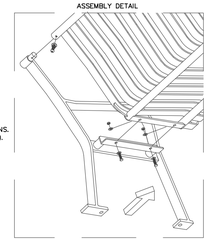

RB-28
STEELSITES™ RB SERIES

ALL STEEL CONTOURED BENCH
PROVIDE STANDARD 6-FOOT LENGTH
COLOR: BLACK

BENCH

N.T.S

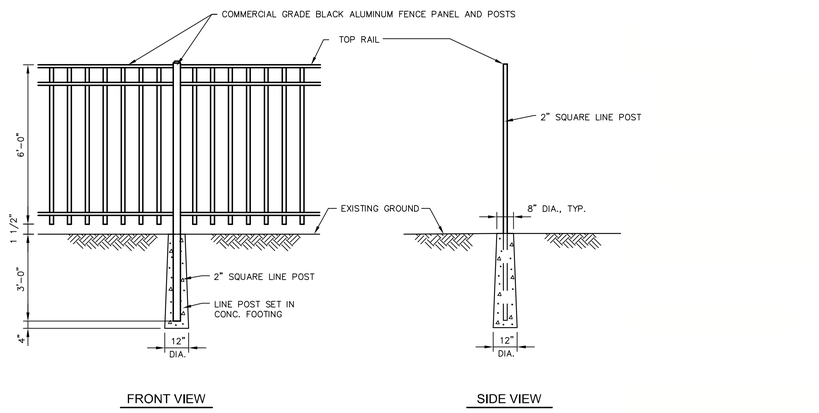

FRONT VIEW

SIDE VIEW

ALUMINUM FENCE DETAIL

N.T.S. BLFD-001

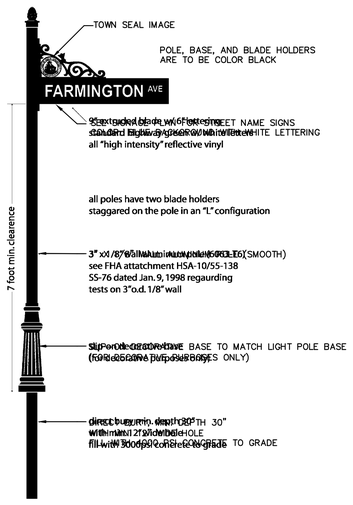

DECORATIVE STREET SIGN AND POST

N.T.S

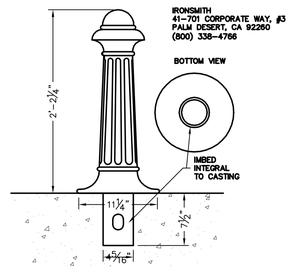

SALEM M9023 BOLLARD
CAST ALUMINUM PER ASTM B26 (APP. 50 LBS)
WITHOUT PROVISION FOR CHAIN
PROVIDE BLACK POWDER COAT ON CAST ALUMINUM

BOLLARD

N.T.S

FOR PERMITTING PURPOSES ONLY
NOT RELEASED FOR CONSTRUCTION

BL Companies
ARCHITECTURE
ENGINEERING
PLANNING
LANDSCAPE ARCHITECTURE
LAND SURVEYING
ENVIRONMENTAL SCIENCES

355 Research Parkway
Meriden, CT 06450
(203) 630-1406
(203) 630-2615 Fax

VILLAGE STREET AND TRANSIT PATHWAYS

VILLAGE STREET
MANSFIELD, CONNECTICUT

REVISIONS
No. Date Desc.

Designed	S.K.B.
Drawn	E.L.Z.
Checked	
Approved	
Scale	N.T.S.
Project No.	10C3550
Date	8/15/11
CAD File	TMDS10C355001

Title
MISC. DETAIL SHEET

Sheet No.
MDS-3

Xref (s): ; BD10C355001

Sep 15, 2011 12:54pm EZekanny K:\Jobs03\03c667\dwg\TMDS10C355001.dwg
Layout: MDS-3 24X36

THESE DRAWINGS SHALL NOT BE UTILIZED BY ANY PERSON, FIRM OR CORPORATION WITHOUT THE SPECIFIC WRITTEN PERMISSION OF BL COMPANIES

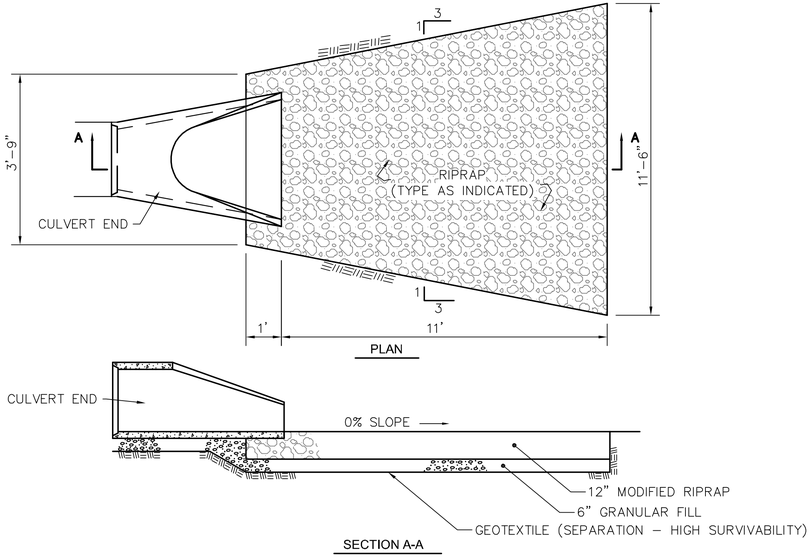

TYPE "A" RIPRAP APRON

N.T.S. CTDD–010

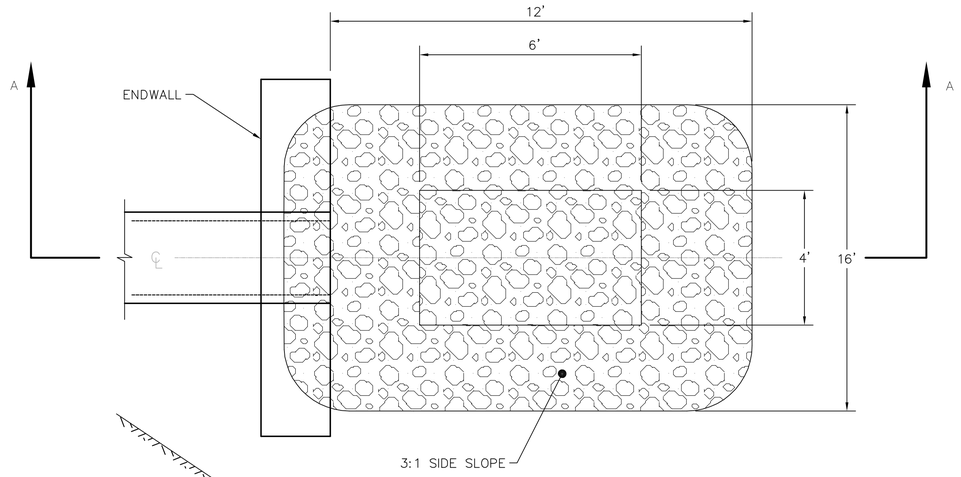

PREFORMED SCOUR HOLE TYPE 2

N.T.S.

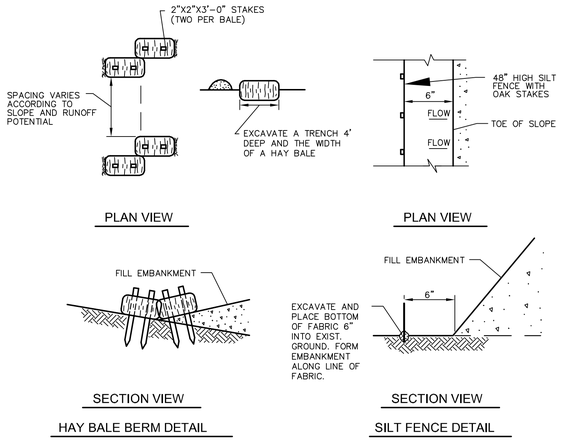

EROSION PROTECTION DEVICES

N.T.S. CTEC–002

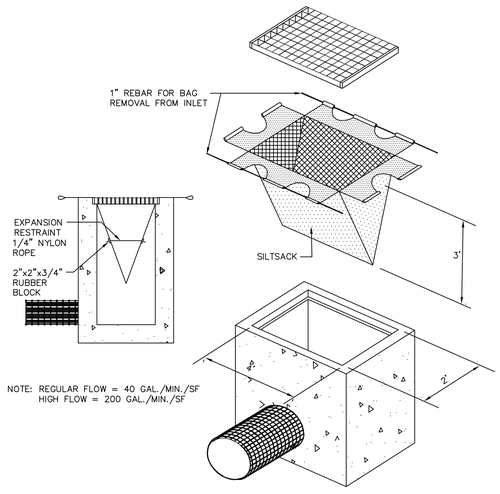

SILTSACK DETAIL

N.T.S. BLEC–005

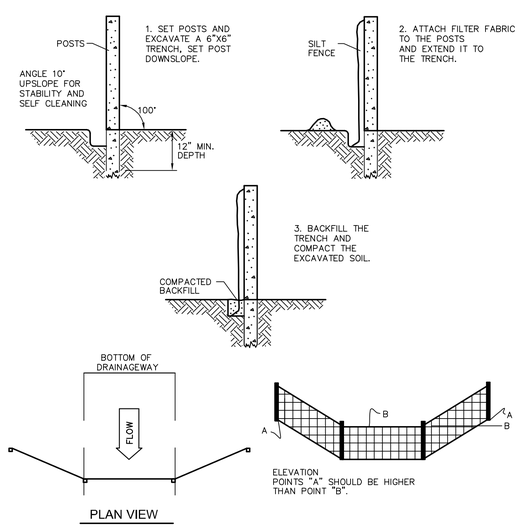

SILT FENCE BARRIER

N.T.S. CTEC–003

FOR PERMITTING PURPOSES ONLY
NOT RELEASED FOR CONSTRUCTION

BL Companies
ARCHITECTURE
ENGINEERING
PLANNING
LANDSCAPE ARCHITECTURE
LAND SURVEYING
ENVIRONMENTAL SCIENCES

355 Research Parkway
Meriden, CT 06450
(203) 630-1406
(203) 630-2615 Fax

VILLAGE STREET AND TRANSIT PATHWAYS

VILLAGE STREET
MANSFIELD, CONNECTICUT

REVISIONS
No. Date Desc.

Designed	S.K.B.
Drawn	E.L.Z.
Checked	
Approved	
Scale	N.T.S.
Project No.	10C3550
Date	8/15/11
CAD File	TMDS10C355001

Title
MISC.
DETAIL SHEET

Sheet No.
MDS-4

Xref (s): ; BD10C355001

Sep 15, 2011 1:17pm EZelazny K:\Jobs03\03s667\dwg\TMDS10C355001.dwg
Layout: MDS-4 24X36

THESE DRAWINGS SHALL NOT BE UTILIZED BY ANY PERSON, FIRM OR CORPORATION WITHOUT THE SPECIFIC WRITTEN PERMISSION OF BL COMPANIES

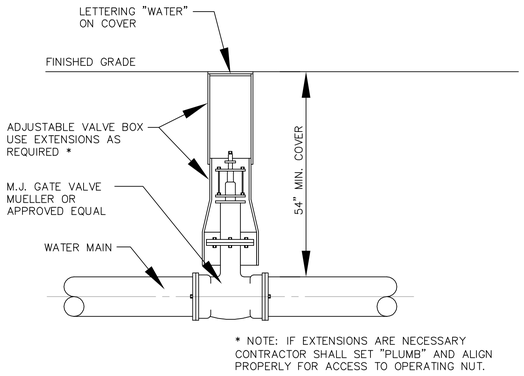

TYPICAL GATE VALVE AND VALVE BOX DETAIL

N.T.S. BLWD–002

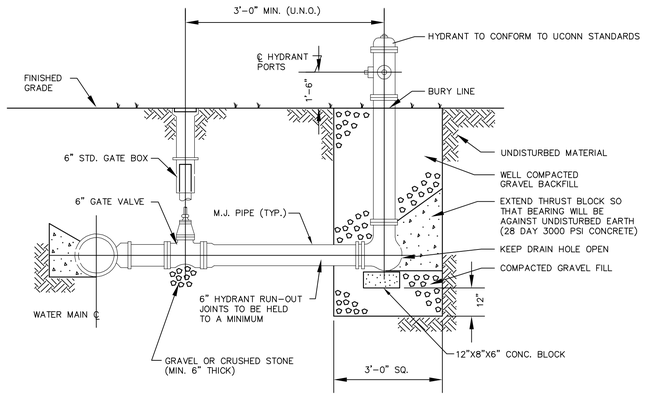

HYDRANT ASSEMBLY DETAIL WITH GATE BOX

N.T.S. BLWD–003

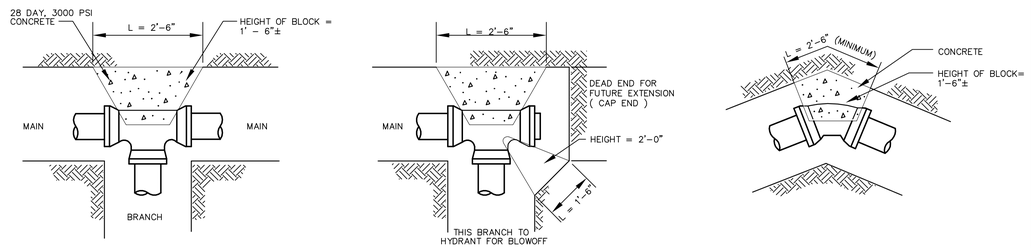

THRUST BLOCKS FOR WATER LINES

N.T.S. BLWD–001

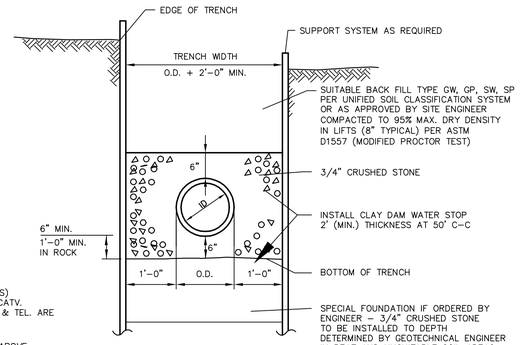

TYPICAL SANITARY SEWER TRENCH SECTION

N.T.S BLSS–010

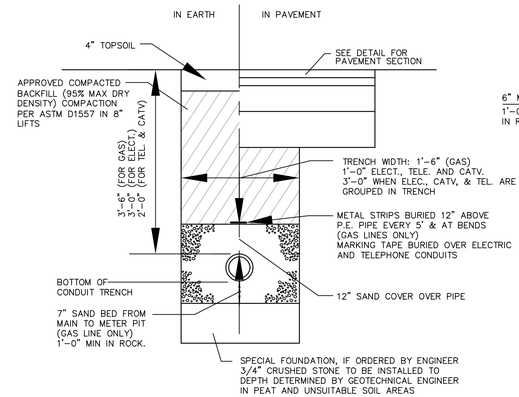

ELECTRICAL, TELEPHONE AND GAS TRENCH DETAIL

N.T.S. BLUD–001

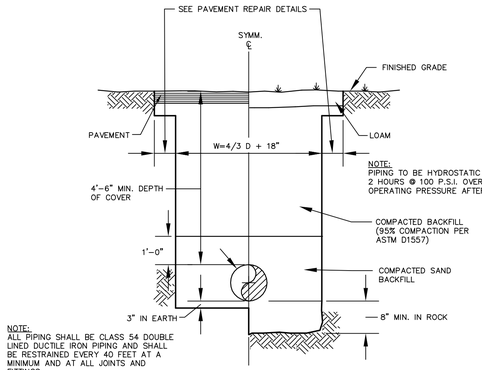

TYPICAL WATER MAIN AND SERVICE TRENCH DETAIL

N.T.S. BLWD–005

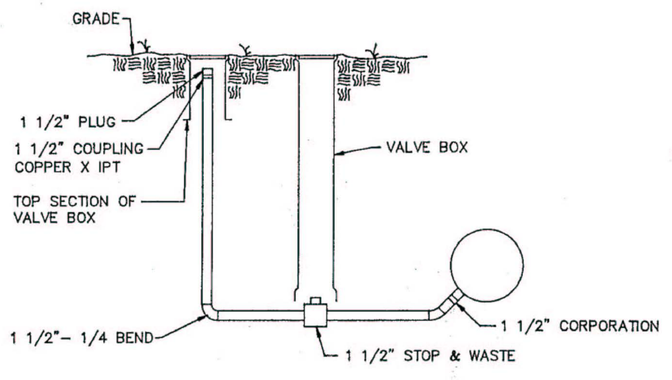

NOTE:
VALVE BOX CAN BE REPLACED WITH A CURB BOX AT THE INSPECTORS OPTION.

LOW POINT BLOW-OFF DETAIL (STATE PROJECT NO. 77-227)

N.T.S.

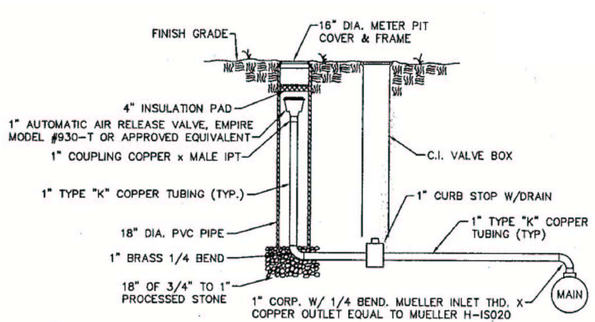

AUTOMATIC AIR RELEASE VALVE DETAIL (STATE PROJECT NO. 77-227)

N.T.S.

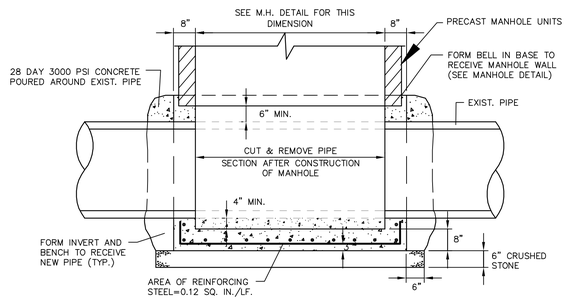

NEW MANHOLE OVER EXISTING PIPE

N.T.S. BLSS–009

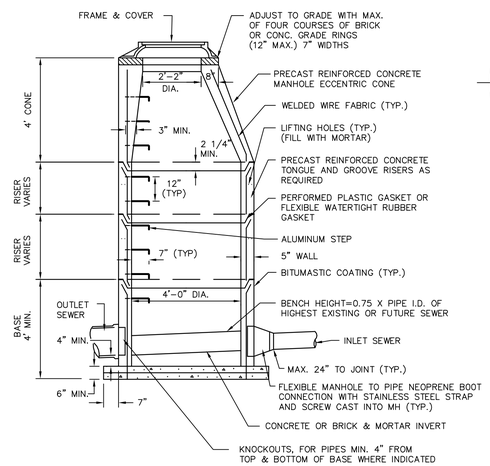

PRECAST SANITARY MANHOLE

N.T.S. BLSS–001

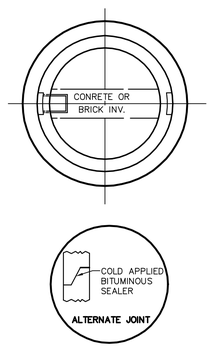

NOTES:
1. 5' OR 6' DIA. PRECAST BASES MAY BE USED WHEN REQUIRED DUE TO SIZE OR NUMBER OF PIPES AT THE MANHOLE. PRECAST REDUCERS WILL BE PLACED ABOVE THE 5' & 6' BASES AS DIRECTED BY THE ENGINEER. WALL THICKNESS TO INCREASE 1" FOR EACH 1' OF INSIDE DIAMETER INCREASE.

2. WHEN INLET SEWER INVERT TO OUTLET SEWER INVERT ELVATION EXCEEDS 24" USE DROP CONNECTION.

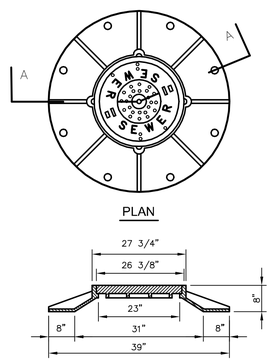

NOTE:
FRAME & GRATE TO BE CAMPBELL FOUNDRY COMPANY–PATTERN NUMBER 1221 WITHOUT COVER VENT HOLES

STANDARD MANHOLE FRAME AND COVER

N.T.S BLSS–002

FOR PERMITTING PURPOSES ONLY NOT RELEASED FOR CONSTRUCTION

BL Companies
ARCHITECTURE
ENGINEERING
PLANNING
LANDSCAPE ARCHITECTURE
LAND SURVEYING
ENVIRONMENTAL SCIENCES

355 Research Parkway
Meriden, CT 06450
(203) 630-1406
(203) 630-2615 Fax

VILLAGE STREET AND TRANSIT PATHWAYS

VILLAGE STREET
MANSFIELD, CONNECTICUT

REVISIONS
No. Date Desc.

Designed	S.K.B.
Drawn	E.L.Z.
Checked	
Approved	
Scale	N.T.S.
Project No.	10C3550
Date	8/15/11
CAD File	TMDS10C355001

Title
MISC. DETAIL SHEET

Sheet No.
MDS-5

Xref (s): ; B10C355001

Sep 15, 2011 1:17pm EZeazny K:\obs03\03s667\dwg\TM0S10C355001.dwg
Layout: MDS–5 24X36

THESE DRAWINGS SHALL NOT BE UTILIZED BY ANY PERSON, FIRM OR CORPORATION WITHOUT THE SPECIFIC WRITTEN PERMISSION OF BL COMPANIES

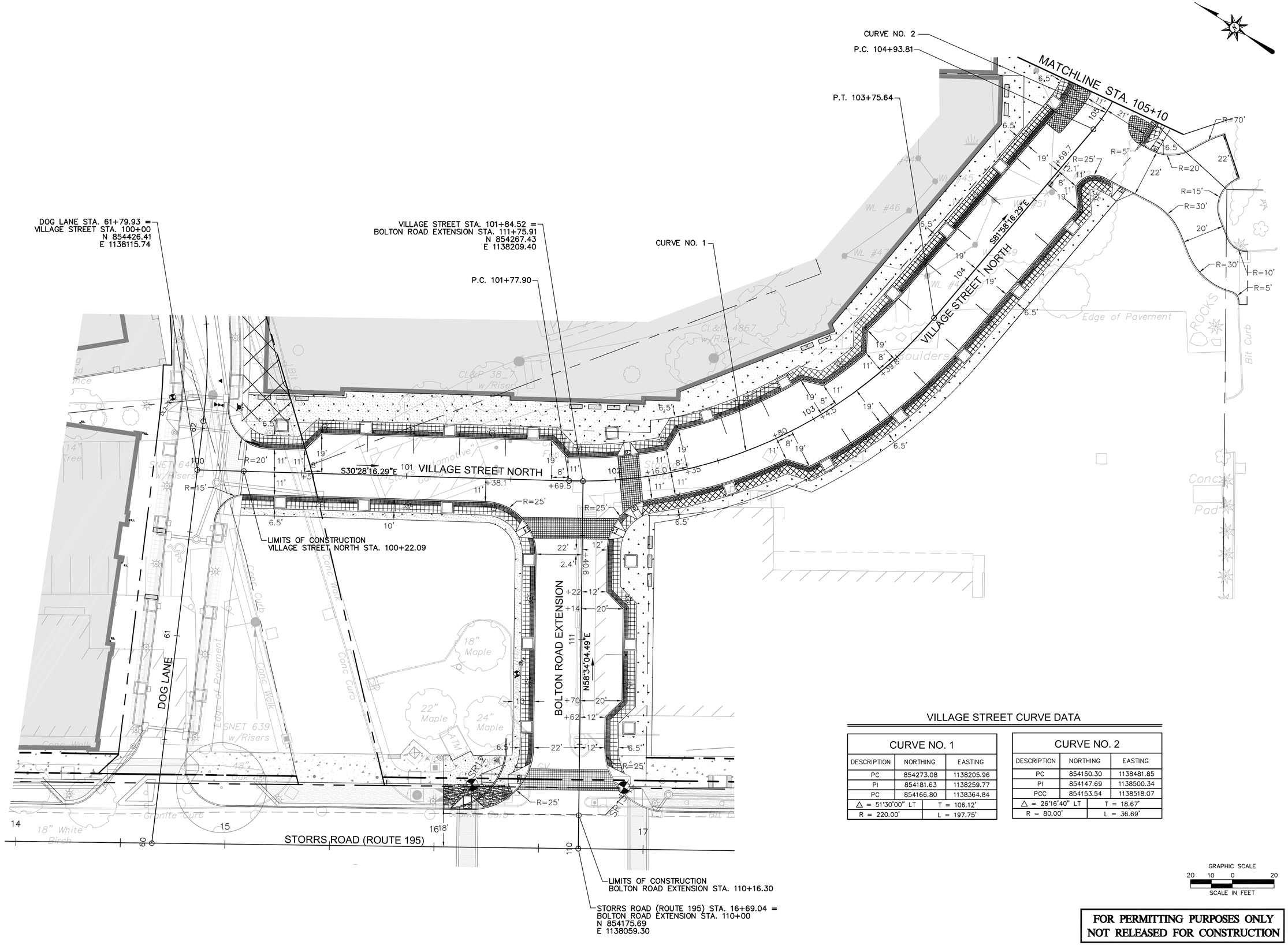

VILLAGE STREET CURVE DATA

CURVE NO. 1		
DESCRIPTION	NORTHING	EASTING
PC	854273.08	1138205.96
PI	854181.63	1138259.77
PC	854166.80	1138364.84
△ = 51°30'00" LT	T = 106.12'	
R = 220.00'	L = 197.75'	

CURVE NO. 2		
DESCRIPTION	NORTHING	EASTING
PC	854150.30	1138481.85
PI	854147.69	1138500.34
PCC	854153.54	1138518.07
△ = 26°16'40" LT	T = 18.67'	
R = 80.00'	L = 36.69'	

GRAPHIC SCALE
20 10 0 20
SCALE IN FEET

FOR PERMITTING PURPOSES ONLY
NOT RELEASED FOR CONSTRUCTION

BL Companies
ARCHITECTURE
ENGINEERING
PLANNING
LANDSCAPE ARCHITECTURE
LAND SURVEYING
ENVIRONMENTAL SCIENCES

355 Research Parkway
Meriden, CT 06450
(203) 630-1406
(203) 630-2615 Fax

VILLAGE STREET AND TRANSIT PATHWAYS

VILLAGE STREET
MANSFIELD, CONNECTICUT

REVISIONS
No. Date Desc.

Designed	J.I.G.
Drawn	E.L.Z. / J.I.G.
Checked	
Approved	
Scale	1"=20'
Project No.	10C3550
Date	8/15/11
CAD File	THZL10C355001

Title
HORIZONTAL LAYOUT PLAN

Sheet No.
HZL-1

Sep 15, 2011 12:52pm EZelazny K:\obs03\03s667\dwg\THZL10C355001.dwg
Layout: HZL-1 24X36 20sc

Xref (s): ; XR03C66700 ; XR03C66701 ; XY03C66701 ; XR08C3079801 ; XC03C667001 ; XR08C3079802 ; XR10C355001 ; BD10C355001 ; XR10C355003

THESE DRAWINGS SHALL NOT BE UTILIZED BY ANY PERSON, FIRM OR CORPORATION WITHOUT THE SPECIFIC WRITTEN PERMISSION OF BL COMPANIES

VILLAGE STREET NORTH CURVE DATA

CURVE NO. 2		
DESCRIPTION	NORTHING	EASTING
PC	854150.30	1138481.85
PI	854147.69	1138500.34
PCC	854153.54	1138518.07
△ = 26°16'40" LT	T = 18.67'	
R = 80.00'	L = 36.69'	

CURVE NO. 3		
DESCRIPTION	NORTHING	EASTING
PC	854173.16	1138604.36
PI	854168.12	1138610.65
PT	854162.13	1138616.05
△ = 09°13'07" RT	T = 8.06'	
R = 100.00'	L = 16.09'	

VILLAGE STREET SOUTH CURVE DATA

CURVE NO. 4		
DESCRIPTION	NORTHING	EASTING
PC	854173.16	1138604.36
PI	854168.12	1138610.65
PT	854162.13	1138616.05
△ = 09°13'07" RT	T = 8.06'	
R = 100.00'	L = 16.09'	

CURVE NO. 5		
DESCRIPTION	NORTHING	EASTING
PC	854051.73	1138715.65
PI	854042.09	1138724.34
PT	854030.20	1138729.54
△ = 18°25'33" RT	T = 12.98'	
R = 80.00'	L = 25.73'	

CURVE NO. 6		
DESCRIPTION	NORTHING	EASTING
PC	853914.78	1138780.04
PI	854030.20	1138729.54
PT	853861.50	1138783.88
△ = 39°00'17" RT	T = 28.33'	
R = 80.00'	L = 54.46'	

CURVE NO. 7		
DESCRIPTION	NORTHING	EASTING
PC	853856.79	1138782.59
PI	853842.77	1138778.73
PT	853828.33	1138776.94
△ = 08°19'10" LT	T = 14.55'	
R = 200.00'	L = 29.04'	

DOG LANE CONNECTOR CURVE DATA

CURVE NO. 8		
DESCRIPTION	NORTHING	EASTING
PC	854350.52	1138555.78
PI	854309.33	1138573.98
PT	854283.68	1138610.99
△ = 31°26'13" LT	T = 45.03'	
R = 160.00'	L = 87.79'	

CURVE NO. 9		
DESCRIPTION	NORTHING	EASTING
PC	854271.15	1138629.06
PI	854259.98	1138645.17
PT	854257.53	1138664.63
△ = 27°32'22" LT	T = 19.61'	
R = 80.00'	L = 38.45'	

CURVE NO. 10		
DESCRIPTION	NORTHING	EASTING
PC	854254.35	1138689.82
PI	854252.54	1138704.19
PT	854241.78	1138713.89
△ = 40°45'29" RT	T = 14.49'	
R = 39.00'	L = 27.74'	

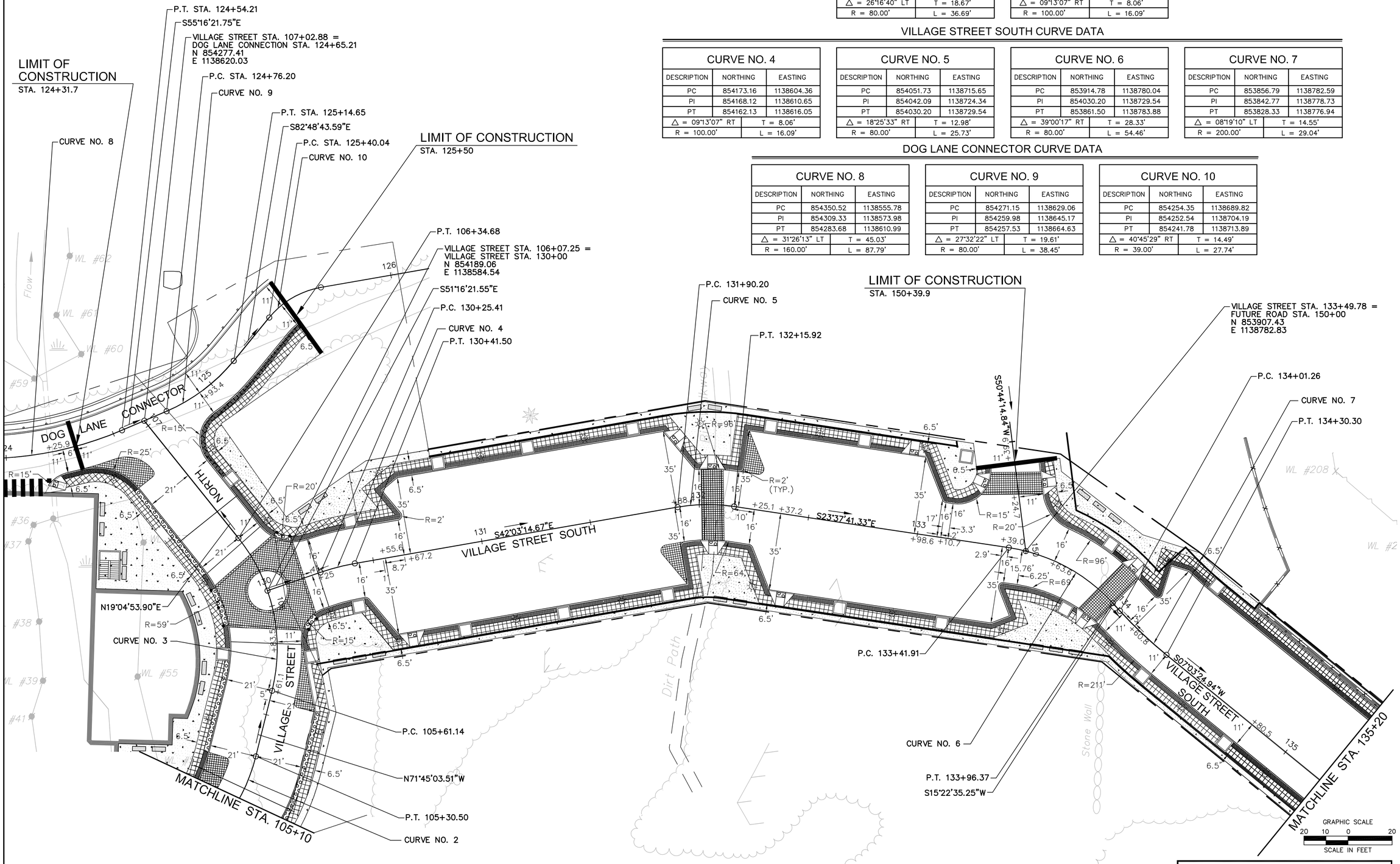

FOR PERMITTING PURPOSES ONLY
NOT RELEASED FOR CONSTRUCTION

BL Companies
ARCHITECTURE
ENGINEERING
PLANNING
LANDSCAPE ARCHITECTURE
LAND SURVEYING
ENVIRONMENTAL SCIENCES

355 Research Parkway
Meriden, CT 06450
(203) 630-1406
(203) 630-2615 Fax

VILLAGE STREET AND TRANSIT PATHWAYS

VILLAGE STREET
MANSFIELD, CONNECTICUT

REVISIONS

No.	Date	Desc.

Designed	J.I.G.
Drawn	E.L.Z. / J.I.G.
Checked	
Approved	
Scale	1"=20'
Project No.	10C3550
Date	8/15/11
CAD File	THZL10C355001

Title

HORIZONTAL LAYOUT PLAN

Sheet No.

HZL-2

Xref (s): ; XR03C667001 ; XR03C667002 ; XR08C3079B01 ; XR08C3079B02 ; XR10C355001 ; BD10C355001 ; XR10C355003

Sep 15, 2011 2:11pm EZelazny K:\data03\03c667\dwg\THZL10C355001.dwg
Layout: HZL-2 24X36 20sc

THESE DRAWINGS SHALL NOT BE UTILIZED BY ANY PERSON, FIRM OR CORPORATION WITHOUT THE SPECIFIC WRITTEN PERMISSION OF BL COMPANIES

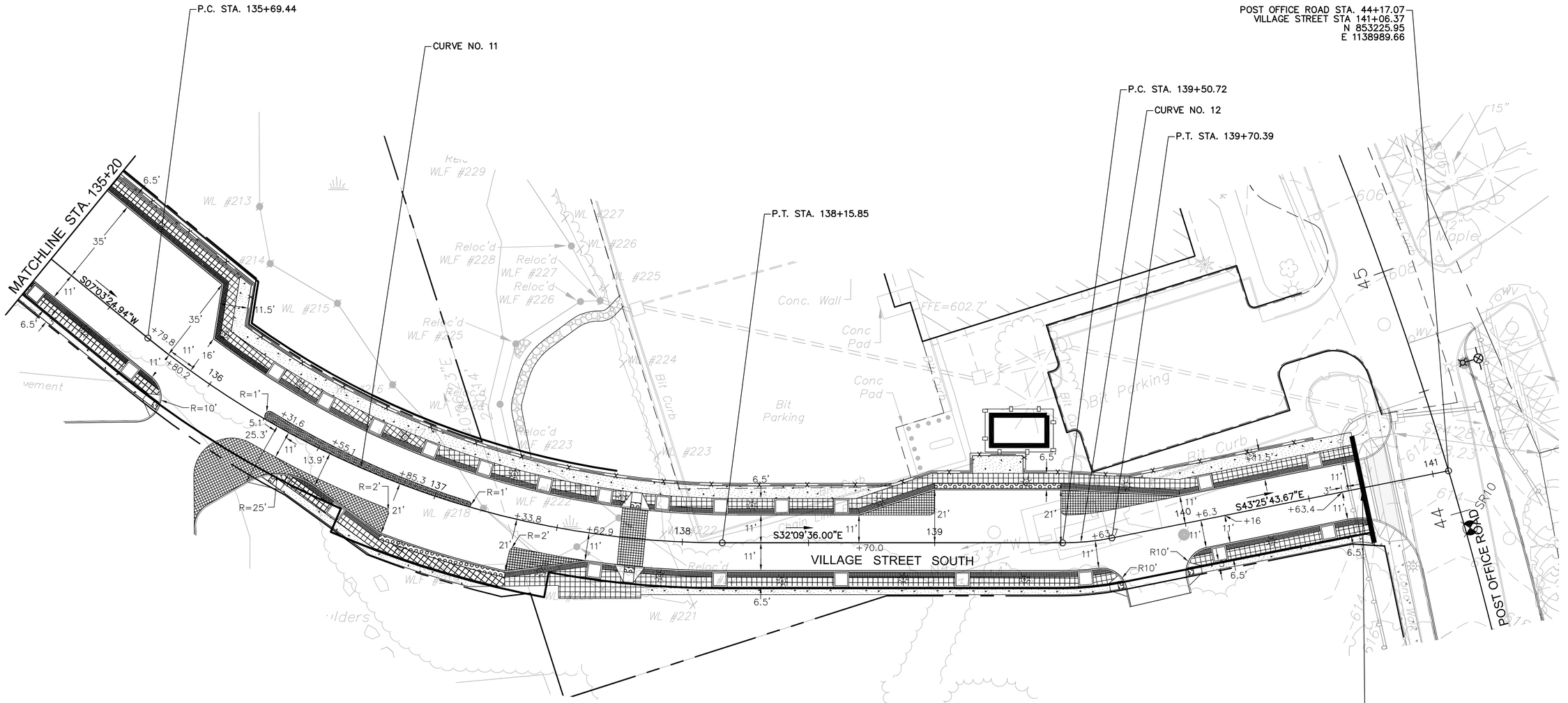

VILLAGE STREET SOUTH CURVE DATA

CURVE NO. 11		
DESCRIPTION	NORTHING	EASTING
PC	853690.24	1138759.85
PI	853562.97	1138744.09
PT	853454.39	1138812.36
△ = 39°13'01" LT		T = 128.25'
R = 360.00'		L = 246.41'

CURVE NO. 12		
DESCRIPTION	NORTHING	EASTING
PC	853340.21	1138884.15
PI	853331.86	1138889.40
PT	853324.70	1138896.18
△ = 11°16'08" LT		T = 9.87'
R = 100.00'		L = 19.67'

GRAPHIC SCALE
20 10 0 20
SCALE IN FEET

FOR PERMITTING PURPOSES ONLY
NOT RELEASED FOR CONSTRUCTION

BL Companies
ARCHITECTURE
ENGINEERING
PLANNING
LANDSCAPE ARCHITECTURE
LAND SURVEYING
ENVIRONMENTAL SCIENCES

355 Research Parkway
Meriden, CT 06450
(203) 630-1406
(203) 630-2615 Fax

VILLAGE STREET AND TRANSIT PATHWAYS

VILLAGE STREET
MANSFIELD, CONNECTICUT

REVISIONS
No. Date Desc.

Designed	J.I.G.
Drawn	E.L.Z. / J.I.G.
Checked	
Approved	
Scale	1"=20'
Project No.	10C3550
Date	8/15/11
CAD File	THZL10C355001

Title
HORIZONTAL LAYOUT PLAN

Sheet No.
HZL-3

Xref (s): ; XR03C667700 ; XR03C667701 ; XY03J667701 ; XR08C3079B01 ; XC03C667001 ; XR08C3079B02 ; XR10C355001 ; BI10C355001 ; XR10C355003

Sep 15, 2011 12:52pm EZelazny K:\Jobs03\03c667\dwg\THZL10C355001.dwg
Layout: HZL-3 24X36 20sc

THESE DRAWINGS SHALL NOT BE UTILIZED BY ANY PERSON, FIRM OR CORPORATION WITHOUT THE SPECIFIC WRITTEN PERMISSION OF BL COMPANIES

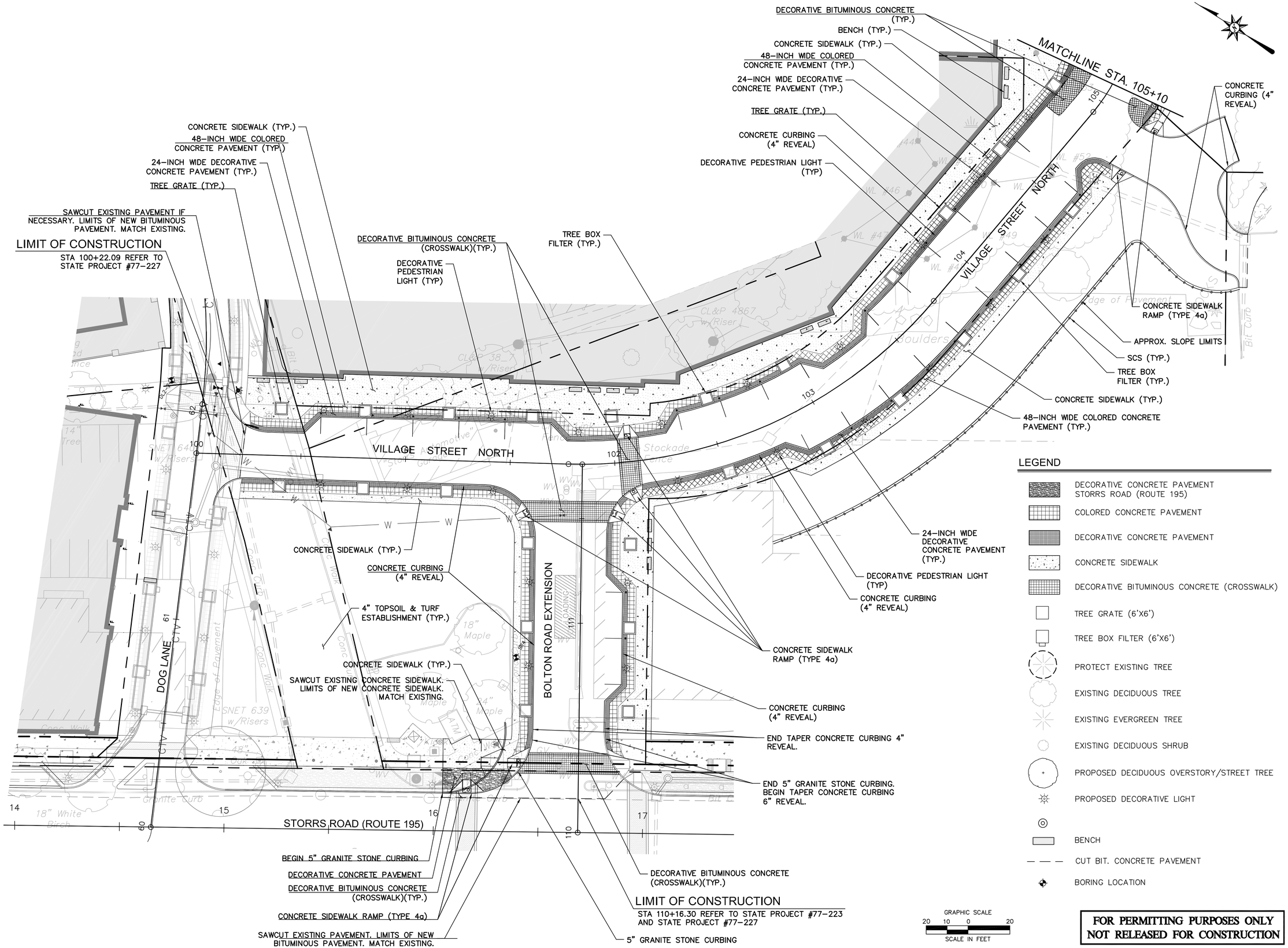

LEGEND

- DECORATIVE CONCRETE PAVEMENT STORRS ROAD (ROUTE 195)
- COLORED CONCRETE PAVEMENT
- DECORATIVE CONCRETE PAVEMENT
- CONCRETE SIDEWALK
- DECORATIVE BITUMINOUS CONCRETE (CROSSWALK)
- TREE GRATE (6'X6')
- TREE BOX FILTER (6'X6')
- PROTECT EXISTING TREE
- EXISTING DECIDUOUS TREE
- EXISTING EVERGREEN TREE
- EXISTING DECIDUOUS SHRUB
- PROPOSED DECIDUOUS OVERSTORY/STREET TREE
- PROPOSED DECORATIVE LIGHT
- BENCH
- CUT BIT. CONCRETE PAVEMENT
- BORING LOCATION

FOR PERMITTING PURPOSES ONLY
NOT RELEASED FOR CONSTRUCTION

BL Companies
ARCHITECTURE
ENGINEERING
PLANNING
LANDSCAPE ARCHITECTURE
LAND SURVEYING
ENVIRONMENTAL SCIENCES
355 Research Parkway
Meriden, CT 06450
(203) 630-1406
(203) 630-2615 Fax

VILLAGE STREET AND TRANSIT PATHWAYS

VILLAGE STREET
MANSFIELD, CONNECTICUT

REVISIONS

No.	Date	Desc.

Designed	J.I.G.
Drawn	E.L.Z. / J.I.G.
Checked	
Approved	
Scale	1"=20'
Project No.	10C3550
Date	8/15/11
CAD File	THWY10C355001

Title
ROADWAY CONSTRUCTION PLAN

Sheet No.
HWY-1

Sep 15, 2011 12:48pm EZelazny K:\Jobs03\03c667\dwg\THWY10C355001.dwg
Layout: HWY-1 24X36 20sc

Xref (s): : XR03C66700 ; XR03C66701 ; XY03c066701 ; XR08C3079B01 ; XC03C667Q01 ; XR08C3079B02 ; XR10C355001 ; BD10C355001 ; XR10C355002 ; XR10C355003

THESE DRAWINGS SHALL NOT BE UTILIZED BY ANY PERSON, FIRM OR CORPORATION WITHOUT THE SPECIFIC WRITTEN PERMISSION OF BL COMPANIES

END MODULAR BLOCK RETAINING WALL. INSTALLED BY OTHERS UNDER STORRS CENTER GR-1 PARKING GARAGE CONTRACT.

CONCRETE CURBING (4" REVEAL)

LIMIT OF CONSTRUCTION

APPROX. SLOPE LIMITS

SCS (TYP.)

END STEEL BACKED MERRIT PARKWAY STYLE GUIDERAIL END ANCHORAGE.

END CONCRETE CURB

LIMIT OF CONSTRUCTION

END CONCRETE CURB

END CONCRETE SIDEWALK

24-INCH WIDE DECORATIVE CONCRETE PAVEMENT (TYP.)

48-INCH WIDE COLORED CONCRETE PAVEMENT (TYP.)

END 4" REVEAL CONCRETE CURB. BEING TAPER.

END TAPER. BEGIN FLUSH CONCRETE CURB

TACTILE WARNING STRIP (TYP)

DECORATIVE BOLLARD (TYP)

BEGIN TAPER. END FLUSH CONCRETE CURB

BEGIN 4" REVEAL CONCRETE CURB. END TAPER.

CONCRETE CURBING (4" REVEAL)

24-INCH WIDE DECORATIVE CONCRETE PAVEMENT (TYP.)

TREE BOX FILTER (TYP.)

48-INCH WIDE COLORED CONCRETE PAVEMENT (TYP.)

CONCRETE SIDEWALK RAMP (TYPE 4a)

CONCRETE SIDEWALK (TYP.)

CONCRETE SIDEWALK RAMP (TYPE 4a)

APPROX. SLOPE LIMITS

DECORATIVE BITUMINOUS CONCRETE (TYP.)

CONCRETE CURBING (4" REVEAL)

48-INCH WIDE COLORED CONCRETE PAVEMENT (TYP.)

24-INCH WIDE DECORATIVE CONCRETE PAVEMENT (TYP.)

4" TOPSOIL & TURF ESTABLISHMENT (TYP.)

DECORATIVE PEDESTRIAN LIGHT (TYP.)

TREE GRATE (TYP.)

DECORATIVE BITUMINOUS CONCRETE CROSSWALK (TYP.)

LIMIT OF CONSTRUCTION

CONCRETE SIDEWALK RAMP (TYPE 4a)

END DOUBLEWAL RETAINING WALL (TYP.)

6' CHAIN LINK FENCE (TYP.)

CONCRETE SIDEWALK (TYP.)

TACTILE WARNING STRIP (TYP)

END 4" REVEAL CONCRETE CURB. BEING TAPER.

END TAPER. BEGIN FLUSH CONCRETE CURB

DECORATIVE BOLLARD (TYP)

BEGIN TAPER. END FLUSH CONCRETE CURB

BEGIN 4" REVEAL CONCRETE CURB. END TAPER.

TACTILE WARNING STRIP (TYP)

DECORATIVE BITUMINOUS CONCRETE (TYP).

TACTILE WARNING STRIP (TYP)

CONCRETE SIDEWALK RAMP (TYPE 4a)

DECORATIVE BITUMINOUS CONCRETE CROSSWALK (TYP.)

CONCRETE SIDEWALK (TYP.)

CONCRETE SIDEWALK RAMP (TYPE 4a)

DECORATIVE PEDESTRIAN LIGHT (TYP.)

48-INCH WIDE COLORED CONCRETE PAVEMENT (TYP.)

18-INCH WIDE DECORATIVE CONCRETE PAVEMENT (TYP.)

TREE BOX FILTER (TYP.)

CONCRETE CURBING (4" REVEAL)

4" TOPSOIL & TURF ESTABLISHMENT (TYP.)

APPROX. SLOPE LIMITS

CONCRETE SIDEWALK RAMP (TYPE 4a)

BENCH (TYP.)

CONCRETE SIDEWALK (TYP.)

BEGIN 4" REVEAL CONCRETE CURB. END TAPER.

BEGIN TAPER. END FLUSH CONCRETE CURB

DECORATIVE BOLLARD (TYP)

END TAPER. BEGIN FLUSH CONCRETE CURB

END 4" REVEAL CONCRETE CURB. BEGIN TAPER.

CONCRETE SIDEWALK (TYP.)

BENCH (TYP)

24-INCH WIDE DECORATIVE CONCRETE PAVEMENT (TYP.)

48-INCH WIDE COLORED CONCRETE PAVEMENT (TYP.)

DECORATIVE BITUMINOUS CONCRETE (CROSSWALK) (TYP.)

CONCRETE SIDEWALK RAMP (TYPE 4a)

APPROX. SLOPE LIMITS

SCS (TYP.)

MATCHLINE STA. 105+10

MATCHLINE STA. 135+20

VILLAGE STREET SOUTH

VILLAGE STREET

CONNECTOR

DOG LANE

NORTH

Dirt Path

Stone Wall

WL #62

WL #61

WL #60

WL #59

WL #36

WL #37

WL #38

WL #58

WL #57

WL #56

WL #208

Flow

GRAPHIC SCALE
20 10 0 20
SCALE IN FEET

FOR PERMITTING PURPOSES ONLY NOT RELEASED FOR CONSTRUCTION

BL Companies

ARCHITECTURE
ENGINEERING
PLANNING
LANDSCAPE ARCHITECTURE
LAND SURVEYING
ENVIRONMENTAL SCIENCES

355 Research Parkway
Meriden, CT 06450
(203) 630-1406
(203) 630-2615 Fax

VILLAGE STREET AND TRANSIT PATHWAYS

VILLAGE STREET
MANSFIELD, CONNECTICUT

REVISIONS

No.	Date	Desc.

Designed	J.I.G.
Drawn	E.L.Z. / J.I.G.
Checked	
Approved	
Scale	1"=20'
Project No.	10C3550
Date	8/15/11
CAD File	THWY10C355001

Title

ROADWAY CONSTRUCTION PLAN

Sheet No.

HWY-2

Xref (s): ; XR03C566700 ; XR03C566701 ; XY03C066701 ; XR08C3079801 ; X03C3567601 ; XR08C3079802 ; XR10C3550001 ; BD10C3550001 ; XR10C3550002 ; XR10C3550003

Sep 15, 2011 1:20pm EZeazny K:\obs03\03c5667\dwg\THWY10C355001.dwg
Layout: HWY-2 24X36 20sc

THESE DRAWINGS SHALL NOT BE UTILIZED BY ANY PERSON, FIRM OR CORPORATION WITHOUT THE SPECIFIC WRITTEN PERMISSION OF BL COMPANIES

DECORATIVE PEDESTRIAN LIGHT (TYP).
48–INCH WIDE COLORED CONCRETE PAVEMENT (TYP.)
24–INCH WIDE DECORATIVE CONCRETE PAVEMENT (TYP.)
DECORATIVE PEDESTRIAN LIGHT (TYP.)
6' CHAIN LINK FENCE (TYP.)
FLUSH DECORATIVE CONCRETE MEDIAN
TREE BOX FILTER (TYP.)
APPROX. SLOPE LIMITS
CONCRETE SIDEWALK RAMP (TYPE 4a)
DOUBLEWAL RETAINING WALL (TYP.)
CONCRETE SIDEWALK (TYP.)
CONCRETE CURBING (4" REVEAL)
48–INCH WIDE COLORED CONCRETE PAVEMENT (TYP.)
24–INCH WIDE DECORATIVE CONCRETE PAVEMENT (TYP.)
TREE GRATE (TYP.)
LIMIT OF CONSTRUCTION
BEGIN DOUBLEWAL RETAINING WALL (TYP.)
BUS SHELTER LOCATION
SANITARY LIFT STATION
MATCHLINE STA. 135+20
VILLAGE STREET SOUTH
CONCRETE SIDEWALK RAMP (TYPE 4a)
DECORATIVE BITUMINOUS CONCRETE (TYP.)
CONCRETE SIDEWALK RAMP (TYPE 4a)
CONCRETE SIDEWALK (TYP.)
TACTILE WARNING STRIP(TYP.)
DECORATIVE BITUMINOUS CONCRETE (TYP.)
TREE BOX FILTER (TYP.)
CONCRETE SIDEWALK RAMP (TYPE 4a)
4" TOPSOIL & TURF ESTABLISHMENT (TYP.)
SCS (TYP.)
APPROX. SLOPE LIMITS
TREE GRATE (TYP.)
DECORATIVE BITUMINOUS CONCRETE (TYP.)
CONCRETE CURBING (4" REVEAL)
DECORATIVE PEDESTRIAN LIGHT (TYP).
48–INCH WIDE COLORED CONCRETE PAVEMENT (TYP.)
24–INCH WIDE DECORATIVE CONCRETE PAVEMENT (TYP.)

GRAPHIC SCALE
20 10 0 20
SCALE IN FEET

FOR PERMITTING PURPOSES ONLY NOT RELEASED FOR CONSTRUCTION

BL Companies
ARCHITECTURE
ENGINEERING
PLANNING
LANDSCAPE ARCHITECTURE
LAND SURVEYING
ENVIRONMENTAL SCIENCES

355 Research Parkway
Meriden, CT 06450
(203) 630-1406
(203) 630-2615 Fax

VILLAGE STREET AND TRANSIT PATHWAYS

VILLAGE STREET
MANSFIELD, CONNECTICUT

REVISIONS
No. Date Desc.

Designed	J.I.G.
Drawn	E.L.Z. / J.I.G.
Checked	
Approved	
Scale	1"=20'
Project No.	10C3550
Date	8/15/11
CAD File	THWY10C355001

Title
ROADWAY CONSTRUCTION PLAN

Sheet No.
HWY-3

Xref (s): ; XR03C667001 ; XR03C667701 ; XR08C307980I ; XC03C667001 ; XR08C307980I2 ; XR10C355001 ; BD10C355001 ; XR10C355002 ; XR10C355003

Sep 15, 2011 12:48pm EZelazny K:\Jobs03\03c667\dwg\THWY10C355001.dwg
Layout: HWY-3 24X36 20sc

THESE DRAWINGS SHALL NOT BE UTILIZED BY ANY PERSON, FIRM OR CORPORATION WITHOUT THE SPECIFIC WRITTEN PERMISSION OF BL COMPANIES

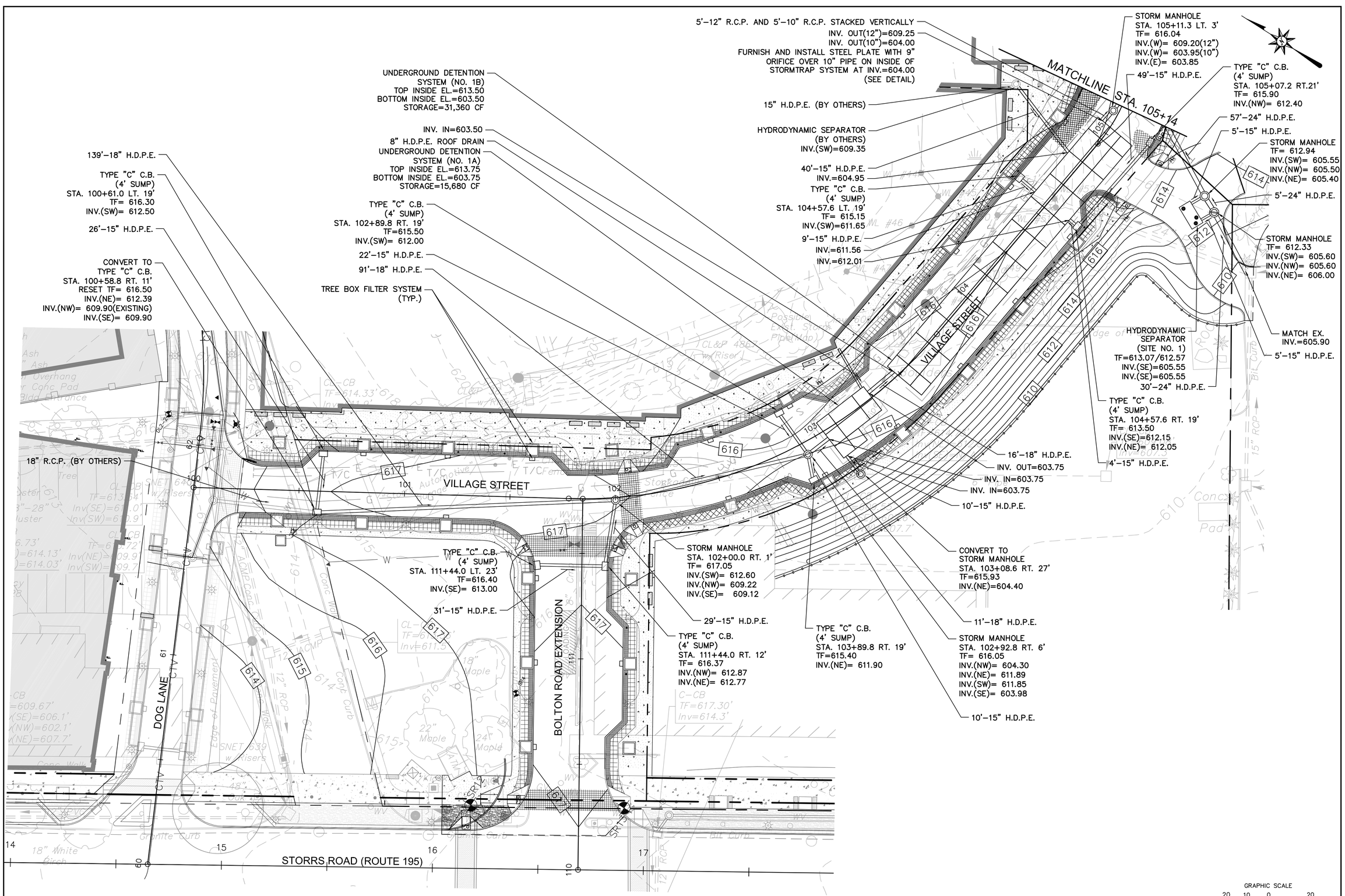

FOR PERMITTING PURPOSES ONLY
NOT RELEASED FOR CONSTRUCTION

BL Companies
ARCHITECTURE
ENGINEERING
PLANNING
LANDSCAPE ARCHITECTURE
LAND SURVEYING
ENVIRONMENTAL SCIENCES

355 Research Parkway
Meriden, CT 06450
(203) 630-1406
(203) 630-2615 Fax

VILLAGE STREET AND TRANSIT PATHWAYS

VILLAGE STREET
MANSFIELD, CONNECTICUT

REVISIONS
No. Date Desc.

Designed	J.I.G.
Drawn	E.L.Z. / J.I.G.
Checked	
Approved	
Scale	1"=20'
Project No.	10C3550
Date	8/15/11
CAD File	TGDR10C355001

Title
GRADING AND DRAINAGE PLAN

Sheet No.
GDR-1

Xref (s): ; XR03C566700 ; XR03C566701 ; XY03C566701 ; XR08C3079801 ; XC03C567001 ; XR08C3079802 ; XR10C355001 ; BB10C355001 ; XR10C355002 ; XR10C355003

Sep 15, 2011 12:51pm EZekzny K:\oba03\03c667\dwg\TGDR10C355001.dwg
Layout: GDR-1 24X36 20sc

THESE DRAWINGS SHALL NOT BE UTILIZED BY ANY PERSON, FIRM OR CORPORATION WITHOUT THE SPECIFIC WRITTEN PERMISSION OF BL COMPANIES

END ROADWAY CONSTRUCTION
STA.

5'–15" H.D.P.E.
5'–15" H.D.P.E.
HYDRODYNAMIC SEPARATOR
(SITE NO. #)
TF=610.30/612.00
INV.(W)=606.35
INV.(W)=606.10
STORM MANHOLE
TF=610.25
INV.(S)=606.45
INV.(E)=606.05
INV.(NW)=606.05
9'–18" H.D.P.E.
TYPE "C" C.B. (4' SUMP)
TF=613.60
INV.(S)=609.92
INV.(SW)=610.10
INV.(NW)=606.54
5'–18" H.D.P.E.
FLARED END OUTLET
C–500
AND PLUNGE POOL
INV OUT=606.00
18'–15" H.D.P.E.
TYPE "C" C.B.
(4' SUMP)
TF=613.60
INV.(N)=610.10
6'–18" H.D.P.E.
STORM MANHOLE
TF=611.95
INV.(SE)=606.45
INV.(E)=606.45
INV.(N)=606.85
STORM
MANHOLE
(BY
OTHERS)
30'–15"
H.D.P.E
61'–15" H.D.P.E.
STORM MANHOLE
TF=614.42
INV.(NW)=610.92
NV.(SW)=610.92
INV.(NE)=610.82
18'–15" H.D.P.E.
TYPE "C" CB
(4' SUMP)
TF=615.10
INV.(NE)=611.60
TYPE "C" CB
(4' SUMP)
TF=614.81
INV.(SE)=611.31
TREE BOX
FILTER SYSTEM
(TYP.)
24" R.C. PIPE
(BY OTHERS)
24" R.C. PIPE
(BY OTHERS)
CONNECT TO
STORM MANHOLE
RESET TF= 616.15
INV.(W)= 603.67
INV.(SW)= 602.18
17'–18" H.D.P.E.
57'–24" H.D.P.E.
STORM MANHOLE
(BY OTHERS)
TREE BOX FILTER SYSTEM
(TYP.)
TYPE "C" C.B.
(4' SUMP)
STA. 131+10.9 LT. 35'
TF=614.15
INV OUT (SW)=610.90
TYPE "C" C.B.
(4' SUMP)
STA. 132+19.2 LT. 35'
TF=615.36
INV OUT (SW)=612.11
40'–15" H.D.P.E.
STORM MANHOLE
STA. 131+09.6 RT. 8'
TF=614.89
INV IN (NE)=610.70
INV IN (SW)=610.70
INV OUT (SE)=610.70
TYPE "C" C.B.
(4' SUMP)
STA. 131+9.5 RT. 35'
TF=614.15
INV.(NE)=610.90
24'–15" H.D.P.E.
TYPE "C" C.B.
(4' SUMP)
STA. 132+39.3 RT. 35'
TF=615.56
INV.(NE)=612.31
124'–15" H.D.P.E.
43'–15" H.D.P.E.
STORM MANHOLE
STA. 132+39.3 RT. 6'
TF=616.12
INV IN (NW)=610.08
INV IN (NE)=611.00
INV IN (SW)=611.00
INV OUT (SE)=610.08
114'–15" H.D.P.E.
26'–15" H.D.P.E.
7'–15" H.D.P.E.
TYPE "C" C.B.
(4' SUMP)
STA. 133+60.1 RT. 15'
TF=617.50
INV.(NE)=614.25
STORM MANHOLE
STA. 133+38.8 LT. 54'
TF=619.60
INV IN (SW)=609.21
INV OUT (SE)=609.21
UNDERGROUND
DETENTION SYSTEM
NO. 2
STORM MANHOLE
STA. 134+95.0 RT. 9'
TF=621.32
INV IN (NE)=616.75
INV IN (SW)=616.75
INV OUT (SE)=616.75
FLARED END SECTION
INV.=609.00
PREFORMED SCOUR HOLE
TYPE 1
40'–18" H.D.P.E.
59'–18" H.D.P.E.
TYPE "C" C.B.
(4' SUMP)
STA. 133+60.1 LT. 17'
TF=617.32
INV.(W)=614.00
18'–15" H.D.P.E.
STORM MANHOLE
STA. 133+56.4 RT. 5'
TF=617.70
INV IN (E)=613.82
INV IN (SW)=614.00
INV IN (S)=614.95
INV IN (NW)=609.51
INV OUT (NE)=609.51
8'–15" H.D.P.E.
INV. OUT(NW)=610.00
23'–15" H.D.P.E.
TYPE "C" CB
(4' SUMP)
STA. 134+93.9
RT.35'
TF=620.77
INV OUT=617.00
23'–15" H.D.P.E.
17'–15" H.D.P.E.
TYPE "C" CB
(4' SUMP)
STA. 134+95.0 LT. 11'
TF=621.28
INV OUT=617.00
VILLAGE STREET
MATCHLINE STA. 105+14
MATCHLINE STA. 135+20
OG LANE CONNECTION
GRAPHIC SCALE
20 10 0 20
SCALE IN FEET

FOR PERMITTING PURPOSES ONLY
NOT RELEASED FOR CONSTRUCTION

BL Companies
ARCHITECTURE
ENGINEERING
PLANNING
LANDSCAPE ARCHITECTURE
LAND SURVEYING
ENVIRONMENTAL SCIENCES

355 Research Parkway
Meriden, CT 06450
(203) 630-1406
(203) 630-2615 Fax

VILLAGE STREET AND TRANSIT PATHWAYS

VILLAGE STREET
MANSFIELD, CONNECTICUT

REVISIONS
No. Date Desc.

Designed J.I.G.
Drawn E.L.Z. / J.I.G.
Checked
Approved
Scale 1"=20'
Project No. 10C3550
Date 8/15/11
CAD File TGDR10C355001

Title
GRADING AND DRAINAGE PLAN

Sheet No.
GDR-2

Xref (s): XR03C56700 ; XR03C56701 ; XR03C56701 ; XR08C3079801 ; XC03C56701 ; XR08C3079802 ; XR10C355001 ; BD10C355001 ; XR10C355002 ; XR10C355003

Sep 15, 2011 - 2:09pm EZakrzy K:\obs\03\03c667\dwg\TGDR10C355001.dwg
Layout: GDR-2 24x36 Xref

THESE DRAWINGS SHALL NOT BE UTILIZED BY ANY PERSON, FIRM OR CORPORATION WITHOUT THE SPECIFIC WRITTEN PERMISSION OF BL COMPANIES

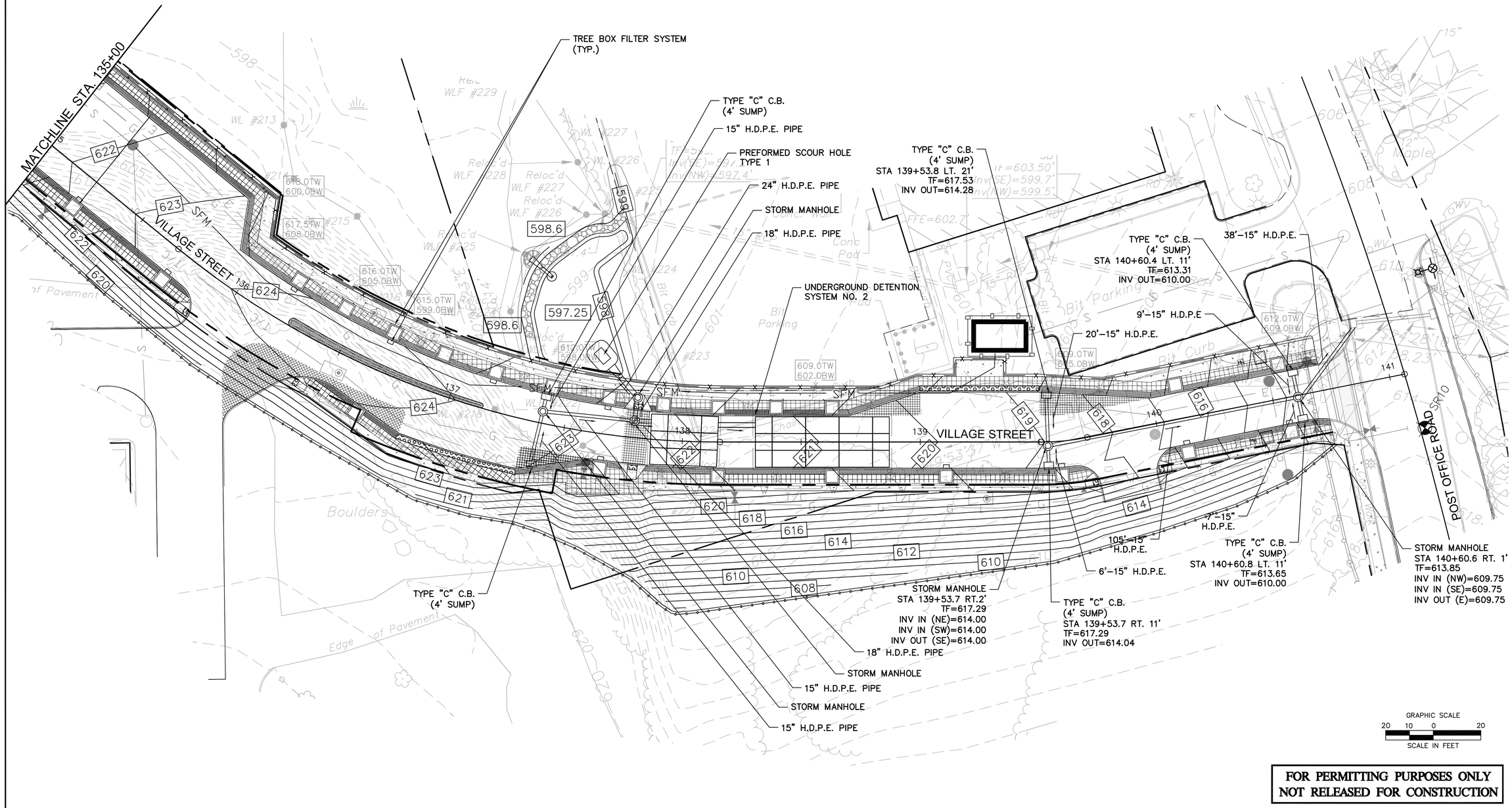

FOR PERMITTING PURPOSES ONLY
NOT RELEASED FOR CONSTRUCTION

BL Companies
ARCHITECTURE
ENGINEERING
PLANNING
LANDSCAPE ARCHITECTURE
LAND SURVEYING
ENVIRONMENTAL SCIENCES

355 Research Parkway
Meriden, CT 06450
(203) 630-1406
(203) 630-2615 Fax

VILLAGE STREET AND TRANSIT PATHWAYS

VILLAGE STREET
MANSFIELD, CONNECTICUT

REVISIONS

No.	Date	Desc.

Designed	J.I.G.
Drawn	E.L.Z. / J.I.G.
Checked	
Approved	
Scale	1"=20'
Project No.	10C3550
Date	8/15/11
CAD File	TGDR10C355001

Title

GRADING AND DRAINAGE PLAN

Sheet No.

GDR-3

Xref (s): : XR03C066700 : XR03C066701 : XY03C066701 : XR08C3079801 : XC03C3567001 : XR08C3079802 : XR10C3550001 : IB010C355001 : XR10C3550002 : XR10C3550003

Sep 15, 2011 12:51pm EZelazny K:\obs\03\03c667\dwg\TGDR10C355001.dwg
Layout: GDR-3 24X36 20sc

THESE DRAWINGS SHALL NOT BE UTILIZED BY ANY PERSON, FIRM OR CORPORATION WITHOUT THE SPECIFIC WRITTEN PERMISSION OF BL COMPANIES

SITE UTILITY LEGEND

WATER LINE	W
SANITARY SEWER LINE	S
ELECTRIC CONDUIT	E
TELEPHONE/CABLE	T/C
GAS MAIN	G
SANITARY MANHOLE	●
HYDRANT	
GATE VALVE	
DECORATIVE STREET LIGHT	

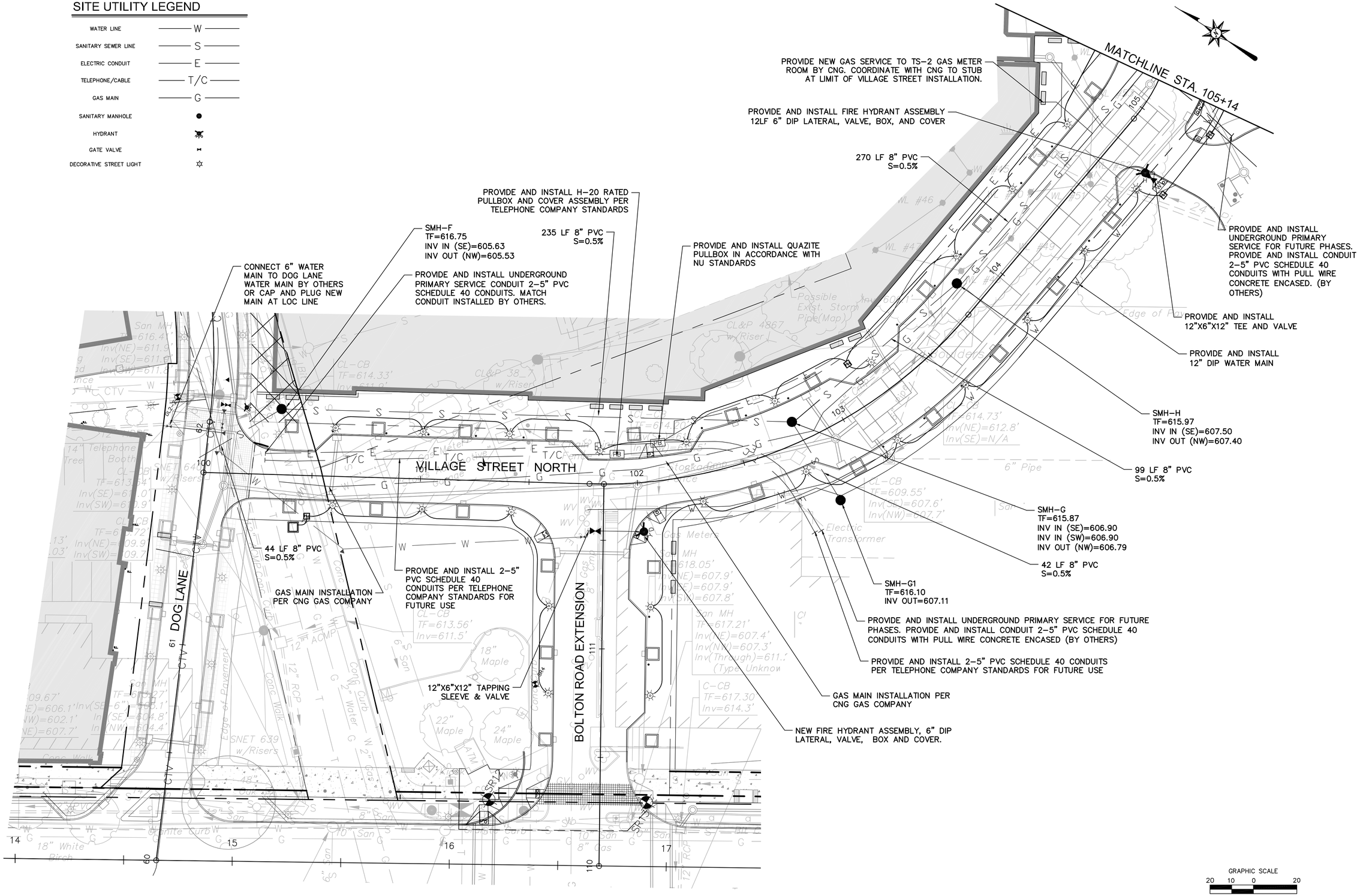

GRAPHIC SCALE
20 10 0 20
SCALE IN FEET

FOR PERMITTING PURPOSES ONLY NOT RELEASED FOR CONSTRUCTION

BL Companies
ARCHITECTURE
ENGINEERING
PLANNING
LANDSCAPE ARCHITECTURE
LAND SURVEYING
ENVIRONMENTAL SCIENCES

355 Research Parkway
Meriden, CT 06450
(203) 630-1406
(203) 630-2615 Fax

VILLAGE STREET AND TRANSIT PATHWAYS

VILLAGE STREET
MANSFIELD, CONNECTICUT

REVISIONS

No.	Date	Desc.

Designed	J.I.G.
Drawn	E.L.Z. / J.I.G.
Checked	
Approved	
Scale	1"=20'
Project No.	10C3550
Date	8/15/11
CAD File	TUTL10C355001

Title
UTILITY CONSTRUCTION PLAN

Sheet No.
UTL-1

Sep 15, 2011 12:49pm EZelazny K:\obs\03\03s667\dwg\TUTL10C355001.dwg
Layout: UTL-1 24X36 20sc

Xref (s): ; XR03C566700 ; XR03C566701 ; XY03C566701 ; XR08C3079801 ; XC03C667001 ; XR08C3079802 ; XR10C355001 ; BB10C355001 ; XR10C355002 ; XR10C355003

THESE DRAWINGS SHALL NOT BE UTILIZED BY ANY PERSON, FIRM OR CORPORATION WITHOUT THE SPECIFIC WRITTEN PERMISSION OF BL COMPANIES

SITE UTILITY LEGEND

WATER LINE	W
SANITARY SEWER LINE	S
ELECTRIC CONDUIT	E
TELEPHONE/CABLE	T/C
GAS MAIN	G
SANITARY MANHOLE	●
HYDRANT	
GATE VALVE	
DECORATIVE STREET LIGHT	

PROVIDE AND INSTALL UNDERGROUND TELECOM FOR FUTURE PHASES. PROVIDE AND INSTALL CONDUIT 2–5" PVC SCHEDULE 40 CONDUITS WITH PULL WIRE.

PROVIDE AND INSTALL UNDERGROUND PRIMARY SERVICE FOR FUTURE PHASES. PROVIDE AND INSTALL CONDUIT 2–5" PVC SCHEDULE 40 CONDUITS WITH PULL WIRE CONCRETE ENCASED IF LESS THAN 30–INCHES OF COVER.

PROVIDE AND INSTALL UNDERGROUND TELECOM MANHOLE

PROVIDE AND INSTALL QUAZITE PULLBOX IN ACCORDANCE WITH CL&P STANDARDS (BY OTHERS)

SMH–K
TF=617.00
INV IN (SE)=610.39
INV OUT (NW)=610.29

10" DIP WATER MAIN

GAS MAIN INSTALLATION PER CNG GAS COMPANY

267 LF 8" PVC
S=0.5%

SMH–I
TF=615.10
INV IN (SE)=608.95
INV OUT (NW)=608.85

PROVIDE AND INSTALL UNDERGROUND TELECOM FOR FUTURE PHASES. PROVIDE AND INSTALL CONDUIT 2–5" PVC SCHEDULE 40 CONDUITS WITH PULL WIRE.

PROVIDE AND INSTALL UNDERGROUND PRIMARY SERVICE FOR FUTURE PHASES. PROVIDE AND INSTALL CONDUIT 2–5" PVC SCHEDULE 40 CONDUITS WITH PULL WIRE CONCRETE ENCASED IF LESS THAN 30–INCHES OF COVER.

49 LF 8" PVC
S=0.5%

SMH–K
TF=618.05
INV IN (S)=610.74
INV OUT (NW)=610.64

160 LF 8" PVC
S=1.98%

PROVIDE AND INSTALL UNDERGROUND PRIMARY SERVICE CONDUIT 2–5" PVC SCHEDULE 40 CONDUITS (BY OTHERS)

PROVIDE AND INSTALL QUAZITE PULLBOX AND COVER ASSEMBLY IN ACCORDANCE WITH CL&P STANDARDS (BY OTHERS)

6" DIP WATER MAIN LATERAL, VALVE, VALVE BOX AND COVER

PROPOSED HYDRANT ASSEMBLY, 6" DIP LATERAL, VALVE, VALVE BOX AND COVER. (TYP)

12"X6"X12" TEE VALVE, VALVE BOX AND COVER

PROVIDE AND INSTALL UNDERGROUND TELECOM FOR FUTURE PHASES. PROVIDE AND INSTALL CONDUIT 2–5" PVC SCHEDULE 40 CONDUITS WITH PULL WIRE.

22.5° BEND 12" DIP WATER MAIN

BLOW OFF VALVE, VALVE BOX AND COVER

45° BEND 12" DIP WATER MAIN

12" DIP WATER MAIN

12" VALVE, VALVE BOX AND COVER

10" VALVE, VALVE BOX AND COVER

12"X10"X12" TEE

12" VALVE, VALVE BOX AND COVER

PROVIDE AND INSTALL UNDERGROUND TELECOM MANHOLE

12"X6"X12" TEE VALVE, VALVE BOX AND COVER

PROPOSED HYDRANT ASSEMBLY, 6" DIP LATERAL, VALVE, VALVE BOX AND COVER. (TYP)

6" DIP WATER MAIN SERVICE LATERAL, VALVE, VALVE BOX AND COVER

MATCHLINE STA. 105+14

MATCHLINE STA. 135+20

GRAPHIC SCALE
20 10 0 20
SCALE IN FEET

FOR PERMITTING PURPOSES ONLY
NOT RELEASED FOR CONSTRUCTION

BL Companies
ARCHITECTURE
ENGINEERING
PLANNING
LANDSCAPE ARCHITECTURE
LAND SURVEYING
ENVIRONMENTAL SCIENCES

355 Research Parkway
Meriden, CT 06450
(203) 630-1406
(203) 630-2615 Fax

VILLAGE STREET AND TRANSIT PATHWAYS

VILLAGE STREET
MANSFIELD, CONNECTICUT

REVISIONS
No. Date Desc.

Designed	J.I.G.
Drawn	E.L.Z. / J.I.G.
Checked	
Approved	
Scale	1"=20'
Project No.	10C3550
Date	8/15/11
CAD File	TUTL10C355001

Title
UTILITY CONSTRUCTION PLAN

Sheet No.
UTL-2

Sep 15, 2011 12:49pm EZekany K:\obs\03\03c667\dwg\TUTL10C355001.dwg
Layout: UTL-2 24X36 20oc

Xref (s): ; XR03C66700 ; XR03C66701 ; XY03c066701 ; XR08C3079B01 ; XC03C667001 ; XR08C3079B02 ; XR10C355001 ; BD10C355001 ; XR10C355002 ; XR10C355003

THESE DRAWINGS SHALL NOT BE UTILIZED BY ANY PERSON, FIRM OR CORPORATION WITHOUT THE SPECIFIC WRITTEN PERMISSION OF BL COMPANIES

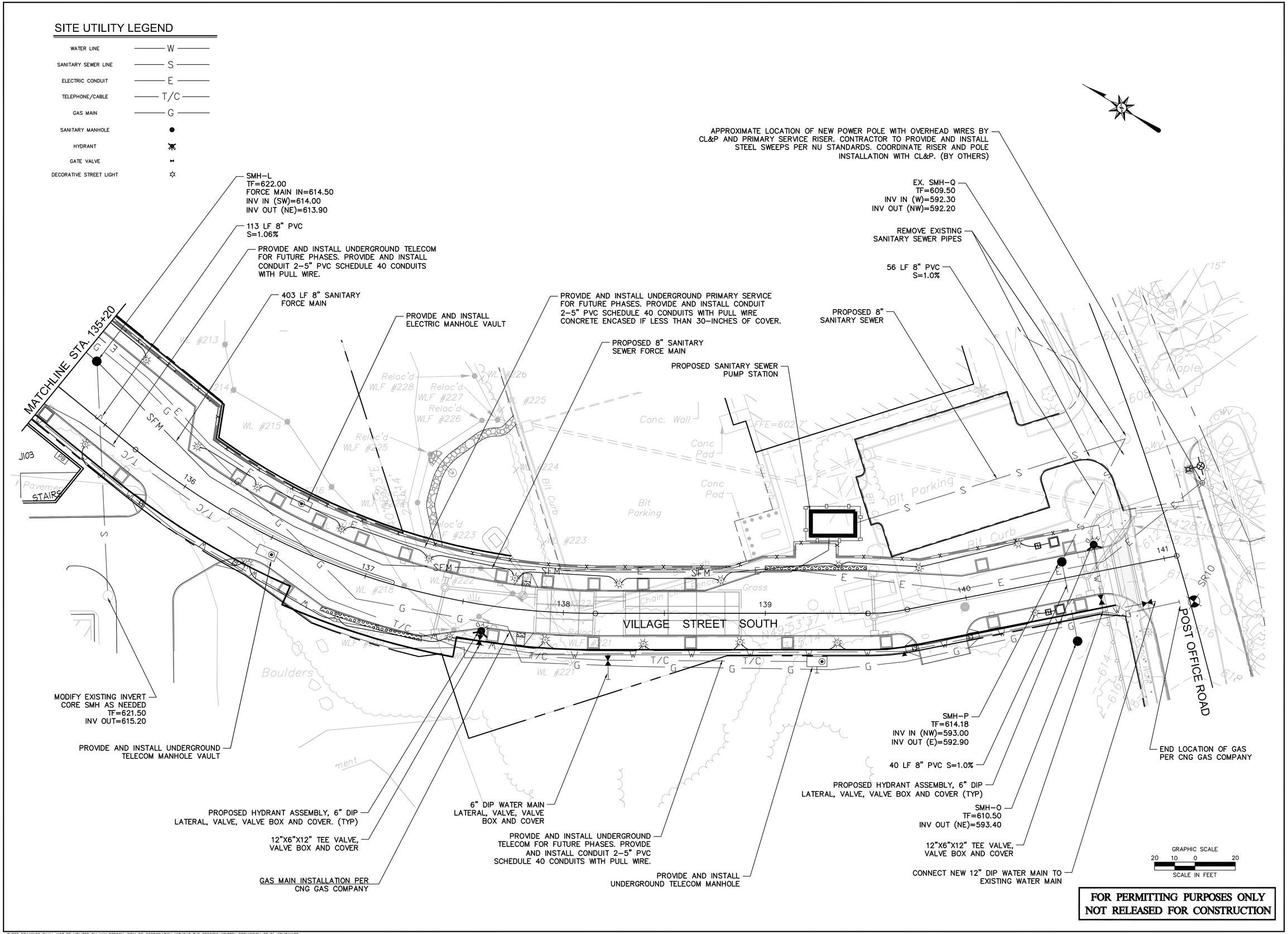

FOR PERMITTING PURPOSES ONLY
NOT RELEASED FOR CONSTRUCTION

BL Companies
ARCHITECTURE
ENGINEERING
PLANNING
LANDSCAPE ARCHITECTURE
LAND SURVEYING
ENVIRONMENTAL SCIENCES
355 Research Parkway
Meriden, CT 06450
(203) 630-1406
(203) 630-2615 Fax

VILLAGE STREET AND TRANSIT PATHWAYS
VILLAGE STREET
MANSFIELD, CONNECTICUT

REVISIONS
No. Date Desc.

Designed	J.I.G.
Drawn	E.L.Z. / J.I.G.
Checked	
Approved	
Scale	1"=20'
Project No.	10C3550
Date	8/15/11
CAD File	TUTL10C355001

Title
UTILITY CONSTRUCTION PLAN

Sheet No.
UTL-3

Sep 15, 2011 12:49pm EZelazny K:\Jobs03\03c667\dwg\TUTL10C355001.dwg
Layout: UTL-3 24X36 20sc

Xref (s): : XR03C66700 ; XR03C66701 ; XY03c066701 ; XR08C3079B01 ; XC03C667Q01 ; XR08C3079B02 ; XR10C355001 ; BD10C355001 ; XR10C355002 ; XR10C355003

THESE DRAWINGS SHALL NOT BE UTILIZED BY ANY PERSON, FIRM OR CORPORATION WITHOUT THE SPECIFIC WRITTEN PERMISSION OF BL COMPANIES

SEE SHEET LDS-5 FOR PLANTING DETAILS AND NOTES

LEGEND

- DECORATIVE CONCRETE PAVEMENT
- COLORED CONCRETE PAVEMENT
- CONCRETE SIDEWALK
- DECORATIVE BITUMINOUS CONCRETE (CROSSWALK)
- TREE GRATE (5'X5')
- TREE BOX FILTER (5'X5')
- PROTECT EXISTING TREE
- EXISTING DECIDUOUS TREE
- EXISTING EVERGREEN TREE
- EXISTING DECIDUOUS SHRUB
- PROPOSED DECIDUOUS OVERSTORY/STREET TREE
- PROPOSED DECORATIVE LIGHT
- TRASH RECEPTACLE
- BENCH

FOR PERMITTING PURPOSES ONLY
NOT RELEASED FOR CONSTRUCTION

BL Companies
ARCHITECTURE
ENGINEERING
PLANNING
LANDSCAPE ARCHITECTURE
LAND SURVEYING
ENVIRONMENTAL SCIENCES

355 Research Parkway
Meriden, CT 06450
(203) 630-1406
(203) 630-2615 Fax

VILLAGE STREET AND TRANSIT PATHWAYS
VILLAGE STREET
MANSFIELD, CONNECTICUT

REVISIONS
No. Date Desc.

Designed	J.W.F.
Drawn	E.L.Z. / J.I.G.
Checked	
Approved	
Scale	1"=20'
Project No.	10C3550
Date	8/15/11
CAD File	TLDS10C355001

Title
LANDSCAPE AND LIGHTING PLAN

Sheet No.
LDS-1

Xref (s): ; XR03C66700 ; XR03C66701 ; XY03c066701 ; XR08C3079B01 ; XC03C667Q01 ; XR08C3079B02 ; XR10C355001 ; BD10C355001 ; XR10C355002 ; XL10C355001 ; XR10C355003

Sep 15, 2011 2:06pm EZelazny K:\Jobs03\03c667\dwg\TLDS10C355001.dwg
Layout: LDS-1 24X36 20SC

THESE DRAWINGS SHALL NOT BE UTILIZED BY ANY PERSON, FIRM OR CORPORATION WITHOUT THE SPECIFIC WRITTEN PERMISSION OF BL COMPANIES

SEE SHEET LDS-5 FOR PLANTING DETAILS AND NOTES

LEGEND

- DECORATIVE CONCRETE PAVEMENT
- COLORED CONCRETE PAVEMENT
- CONCRETE SIDEWALK
- DECORATIVE BITUMINOUS CONCRETE (CROSSWALK)
- TREE GRATE (5'X5')
- TREE BOX FILTER (5'X5')
- PROTECT EXISTING TREE
- EXISTING DECIDUOUS TREE
- EXISTING EVERGREEN TREE
- EXISTING DECIDUOUS SHRUB
- PROPOSED DECIDUOUS OVERSTORY/STREET TREE
- PROPOSED DECORATIVE LIGHT
- TRASH RECEPTACLE
- BENCH

COLORED CONCRETE PAVEMENT (TYP.)

TREE BOX FILTER (TYP.)

TREE GRATE (TYP.)

NODE AREA #1:
- BIKE STORAGE & DISPLAY
- SEATING
- LANDSCAPING / GREEN SPACE

NODE AREA #3:
- WATER FEATURE, PERGOLA, OR PUBLIC ART DISPLAY
- SEATING

DECORATIVE BITUMINOUS CONCRETE (TYP.)

LIMIT OF CONSTRUCTION

DECORATIVE BITUMINOUS CONCRETE (TYP.)

VILLAGE STREET

WAYFINDING KIOSK

COLORED CONCRETE PAVEMENT (TYP.)

CONCRETE SIDEWALK (TYP.)

DECORATIVE CONCRETE PAVEMENT (TYP.)

NODE AREA #2:
- OUTDOOR DINING / CAFE SPACE
- LOW STONE SEATING WALL TO SEPARATE SPACE FROM MAIN WALKWAY

NODE AREA #4:
- SEATING
- ORNAMENTAL CLOCK OR WAYFINDING KIOSK

MATCHLINE STA. 105+10

MATCHLINE STA. 135+20

LIMIT OF CONSTRUCTION

GRAPHIC SCALE
20 10 0 20
SCALE IN FEET

FOR PERMITTING PURPOSES ONLY NOT RELEASED FOR CONSTRUCTION

BL Companies
ARCHITECTURE
ENGINEERING
PLANNING
LANDSCAPE ARCHITECTURE
LAND SURVEYING
ENVIRONMENTAL SCIENCES

355 Research Parkway
Meriden, CT 06450
(203) 630-1406
(203) 630-2615 Fax

VILLAGE STREET AND TRANSIT PATHWAYS

VILLAGE STREET
MANSFIELD, CONNECTICUT

REVISIONS
No. Date Desc.

Designed	J.W.F.
Drawn	E.L.Z. / J.I.G.
Checked	
Approved	
Scale	1"=20'
Project No.	10C3550
Date	8/15/11
CAD File	TLDS10C355001

Title
LANDSCAPE AND LIGHTING PLAN

Sheet No.
LDS-2

Xref (s): ; XR03C566700 ; XR06C566701 ; XY03C566701 ; XR08C3079801 ; XC03C567001 ; XR08C3079802 ; XR10C355001 ; BB10C355001 ; XR10C355002 ; XL10C355001 ; XR10C355003

Sep 15, 2011 2:06pm EZelazny K:\obs03\03c667\dwg\TLDS10C355001.dwg
Layout: LDS-2 24X36 205C

THESE DRAWINGS SHALL NOT BE UTILIZED BY ANY PERSON, FIRM OR CORPORATION WITHOUT THE SPECIFIC WRITTEN PERMISSION OF BL COMPANIES

LEGEND

- DECORATIVE CONCRETE PAVEMENT
- COLORED CONCRETE PAVEMENT
- CONCRETE SIDEWALK
- DECORATIVE BITUMINOUS CONCRETE (CROSSWALK)
- TREE GRATE (5'X5')
- TREE BOX FILTER (5'X5')
- PROTECT EXISTING TREE
- EXISTING DECIDUOUS TREE
- EXISTING EVERGREEN TREE
- EXISTING DECIDUOUS SHRUB
- PROPOSED DECIDUOUS OVERSTORY/STREET TREE
- PROPOSED DECORATIVE LIGHT
- TRASH RECEPTACLE
- BENCH

SEE SHEET LDS-5 FOR PLANTING DETAILS AND NOTES

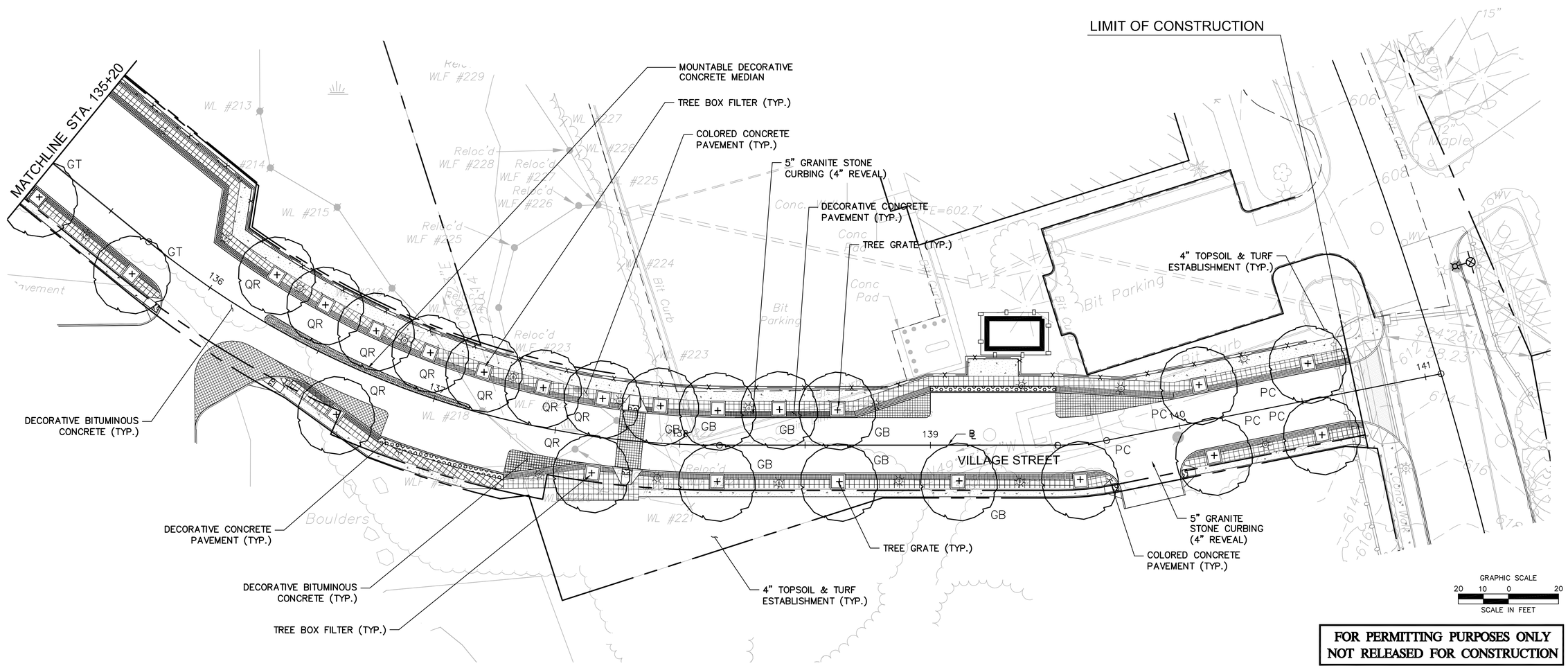

FOR PERMITTING PURPOSES ONLY
NOT RELEASED FOR CONSTRUCTION

BL Companies
ARCHITECTURE
ENGINEERING
PLANNING
LANDSCAPE ARCHITECTURE
LAND SURVEYING
ENVIRONMENTAL SCIENCES

355 Research Parkway
Meriden, CT 06450
(203) 630-1406
(203) 630-2615 Fax

VILLAGE STREET AND TRANSIT PATHWAYS

VILLAGE STREET
MANSFIELD, CONNECTICUT

REVISIONS

No.	Date	Desc.

Designed	J.W.F.
Drawn	E.L.Z. / J.I.G.
Checked	
Approved	
Scale	1"=20'
Project No.	10C3550
Date	8/15/11
CAD File	TLDS10C355001

Title

LANDSCAPE AND AMENITY PLAN

Sheet No.

LDS-3

Sep 15, 2011 2:06pm EZelazny K:\Jobs03\03c667\dwg\TLDS10C355001.dwg
Layout: LDS-3 24X36 20SC

Xref (s): : XR03C66700 : XR03C66701 : XY03c066701 : XR08C3079B01 : XC03C667001 : XR08C3079B02 : XR10C355001 : BD10C355001 : XR10C355002 : XL10C355001 : XR10C355003

THESE DRAWINGS SHALL NOT BE UTILIZED BY ANY PERSON, FIRM OR CORPORATION WITHOUT THE SPECIFIC WRITTEN PERMISSION OF BL COMPANIES

LEGEND

- DECORATIVE CONCRETE PAVEMENT
- COLORED CONCRETE PAVEMENT
- CONCRETE SIDEWALK
- DECORATIVE BITUMINOUS CONCRETE (CROSSWALK)
- TREE GRATE (5'X5')
- TREE BOX FILTER (5'X5')
- PROTECT EXISTING TREE
- EXISTING DECIDUOUS TREE
- EXISTING EVERGREEN TREE
- EXISTING DECIDUOUS SHRUB
- PROPOSED DECIDUOUS OVERSTORY/STREET TREE
- PROPOSED DECORATIVE LIGHT
- TRASH RECEPTACLE
- BENCH

SEE SHEET LDS-5 FOR PLANTING DETAILS AND NOTES

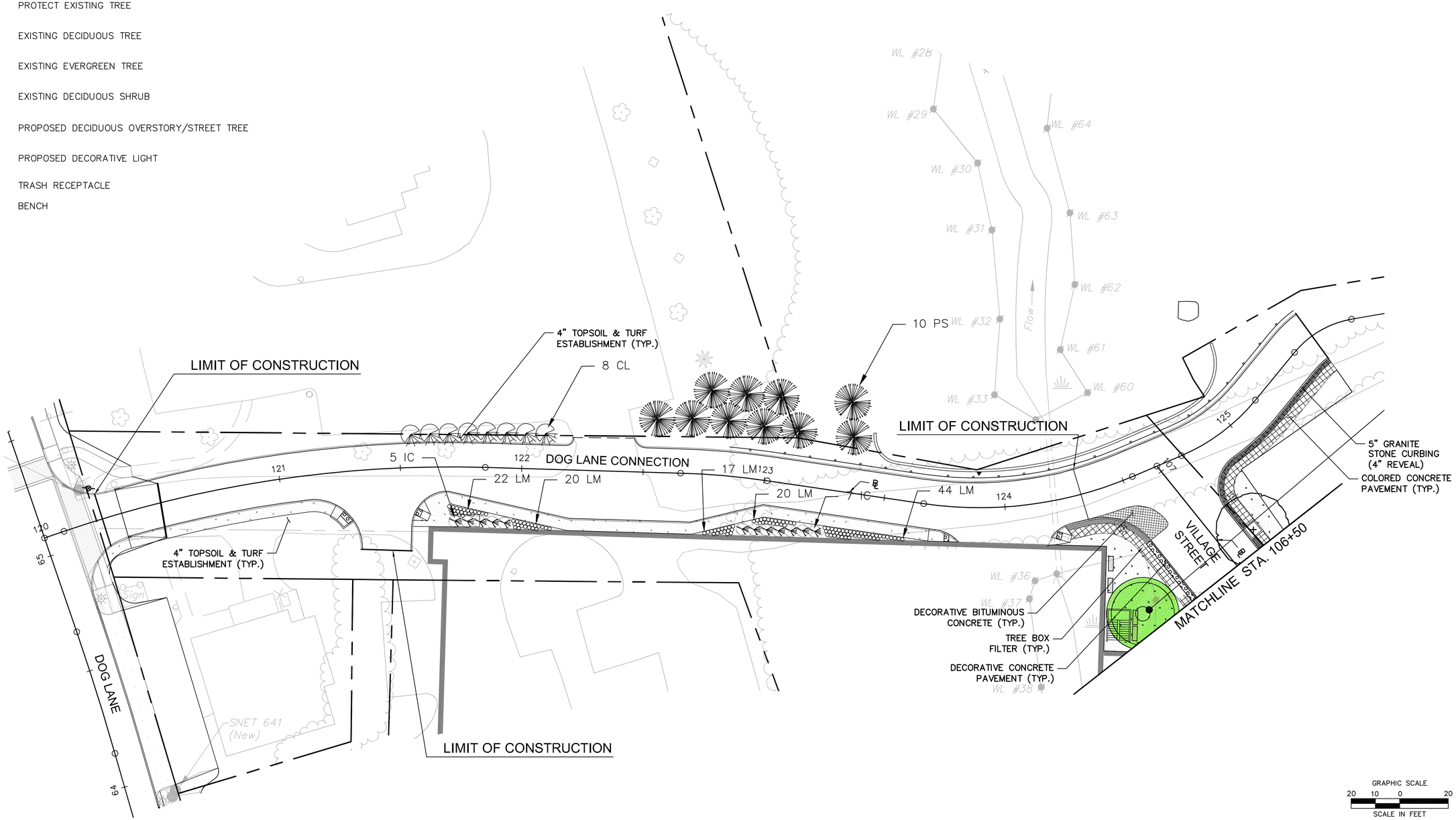

GRAPHIC SCALE
20 10 0 20
SCALE IN FEET

FOR PERMITTING PURPOSES ONLY NOT RELEASED FOR CONSTRUCTION

BL Companies
ARCHITECTURE
ENGINEERING
PLANNING
LANDSCAPE ARCHITECTURE
LAND SURVEYING
ENVIRONMENTAL SCIENCES

355 Research Parkway
Meriden, CT 06450
(203) 630-1406
(203) 630-2615 Fax

VILLAGE STREET AND TRANSIT PATHWAYS

VILLAGE STREET
MANSFIELD, CONNECTICUT

REVISIONS
No. Date Desc.

Designed	J.W.F.
Drawn	E.L.Z. / J.I.G.
Checked	
Approved	
Scale	1"=20'
Project No.	10C3550
Date	8/15/11
CAD File	TLDS10C355001

Title

LANDSCAPE AND LIGHTING PLAN

Sheet No.

LDS-4

Xref (s): ; XR03C66700 ; XR03C66701 ; XY03C66701 ; XR09C30798G1 ; XC03C66701 ; XR08C30798G2 ; XR10C355001 ; IBD10C355001 ; XR10C355002 ; XL10C355001 ; XR10C355003

Sep 15, 2011 2:06pm EZelazny K:\ace03\103c667\dwg\TLDS10C355001.dwg
Layout: LDS-4 24X36 205C

THESE DRAWINGS SHALL NOT BE UTILIZED BY ANY PERSON, FIRM OR CORPORATION WITHOUT THE SPECIFIC WRITTEN PERMISSION OF BL COMPANIES

LANDSCAPE NOTES

1. THE LANDSCAPE PLAN AND DETAIL SHEET ARE FOR LANDSCAPING INFORMATION ONLY. REFER TO THE HORIZONTAL LAYOUT PLAN, AND ROADWAY CONSTRUCTION PLAN FOR ALL OTHER INFORMATION.

2. PLANTING LOCATIONS ARE APPROXIMATE AND ARE SUBJECT TO FIELD ADJUSTMENT DUE TO UTILITY LOCATIONS AND SITE CONDITIONS. CONTRACTOR SHALL LAY OUT THE WORK FOR THE REVIEW, ADJUSTMENT, AND APPROVAL OF OWNER OR LANDSCAPE ARCHITECT PRIOR TO PLANTING.

3. UTILITY LOCATIONS SHOWN IN THE DRAWINGS ARE APPROXIMATE. EXERCISE CARE WHEN DIGGING IN AREAS OF POTENTIAL CONFLICT WITH UNDERGROUND OR OVERHEAD UTILITIES. THE CONTRACTOR IS RESPONSIBLE FOR ANY DAMAGE DUE TO CONTRACTOR'S NEGLIGENCE AND SHALL REPLACE OR REPAIR ANY DAMAGE AT CONTRACTOR'S EXPENSE.

4. NO PLANT SHALL BE PLACED IN THE GROUND BEFORE ROUGH GRADING HAS BEEN COMPLETED.

5. TOPSOIL SHALL BE INSTALLED AT A MINIMUM DEPTH OF 4". CONTRACTOR SHALL SUBMIT SAMPLES FROM EACH PROPOSED TOPSOIL SOURCE TO A CERTIFIED TESTING LABORATORY TO DETERMINE pH, FERTILITY, ORGANIC CONTENT AND MECHANICAL COMPOSITION. CONTRACTOR SHALL SUBMIT THE TEST RESULTS TO OWNER OR LANDSCAPE ARCHITECT FOR REVIEW. CONTRACTOR SHALL INCORPORATE AMENDMENTS FOR PROPER SOIL pH AND PLANT GROWTH AS RECOMMENDED BY TEST REPORTS AT NO INCREASE IN CONTRACT PRICE.

6. THE CONTRACTOR SHALL SUPPLY ALL LABOR, PLANTS, AND MATERIALS IN QUANTITIES SUFFICIENT TO COMPLETE THE WORK SHOWN ON THE DRAWINGS AND LISTED IN THE PLANT SCHEDULE. WHEN QUANTITIES LISTED IN THE PLANT SCHEDULE DIFFER FROM THOSE REQUIRED BY THE DRAWINGS, THE LARGER QUANTITY SHALL BE USED.

7. LANDSCAPE PLANTING PITS MUST BE FREE DRAINING. PAVEMENT, COMPACTED SOIL, AND BLASTED ROCK SHALL BE REMOVED FROM PLANTING PITS AND LANDSCAPE ISLANDS TO A DEPTH OF 2' OR TO A GREATER DEPTH IF REQUIRED BY PLANTING DETAILS OR SPECIFICATIONS. REPLACE SOIL WITHIN ISLANDS WITH LOAM OR SANDY LOAM FREE OF STONES AND DEBRIS 1" OR GREATER IN DIAMETER AND ALL OTHER MATERIAL HARMFUL TO PLANT DEVELOPMENT.

8. PLANTING SOIL MIXTURE FOR ALL PLANTINGS SHALL CONSIST OF: 1 PART PEAT MOSS OR COMPOST, 3 PARTS TOPSOIL, "TRANSPLANT 1-STEP" FERTILIZER / BIOSTIMULANT / MYCORRHIZA INOCULATE AS MANUFACTURED BY ROOTS, INC. OR AN APPROVED EQUIVALENT, AND LIME AND OTHER AMENDMENTS AS INDICATED BY SOIL ANALYSIS.

9. PLANT REQUIREMENTS: ALL PLANTS SHALL CONFORM IN SIZE AND GRADE TO THE AMERICAN STANDARD FOR NURSERY STOCK, ANSI Z60.1 (LATEST EDITION). ALL PLANTS SHALL MEET THE ADDITIONAL REQUIREMENTS SET FORTH BELOW AND IN WRITTEN SPECIFICATIONS AS APPLICABLE. ALL TREES AND SHRUBS SHALL HAVE BEEN GROWN AT A COMMERCIAL NURSERY WITHIN 200 MILES OF THE PROJECT SITE UNLESS OTHERWISE APPROVED BY OWNER OR LANDSCAPE ARCHITECT. THEY SHALL BE TYPICAL OF THEIR SPECIES OR VARIETY. THEY SHALL BE HEALTHY, SYMMETRICAL, EVENLY AND DENSELY BRANCHED, AND DENSELY FOLIATED WHEN IN LEAF. THEY SHALL BE FREE OF BARK INJURY, DISEASE, AND INSECT PESTS. ALL TREES SHALL HAVE A STRAIGHT TRUNK WITH A SINGLE MAIN LEADER UNLESS OTHERWISE CHARACTERISTIC OF THE SPECIES OR VARIETY. THE OWNER OR LANDSCAPE ARCHITECT WILL ALLOW SUBSTITUTIONS ONLY UPON WRITTEN APPROVAL. SIZES SHALL CONFORM TO THE MEASUREMENT SPECIFIED ON THE DRAWINGS. PLANTS LARGER THAN SPECIFIED MAY BE USED IF APPROVED. THE USE OF SUCH PLANTS SHALL NOT INCREASE THE CONTRACT PRICE. ALL OVERSTORY TREES PLANTED ALONG PARKING AREAS, SIDEWALKS AND PEDESTRIAN ACCESSES SHALL NOT BRANCH BELOW 7' FEET IF THE TREE CALIPER IS 2 1/2" INCHES OR GREATER. ALL PLANT MATERIALS ARE SUBJECT TO INSPECTION AND ACCEPTANCE BY THE OWNER OR LANDSCAPE ARCHITECT AT THE NURSERY SOURCE. THE CONTRACTOR SHALL COORDINATE SOURCE VISITS WITH THE LANDSCAPE ARCHITECT AND SHALL ACCOMPANY THE OWNER AND/OR LANDSCAPE ARCHITECT FOR ALL INSPECTIONS. CERTIFICATES OF COMPLIANCE WITH SPECIFICATIONS ARE REQUIRED FOR ALL PLANTS.

10. ALL SHRUB BEDS SHALL BE MULCHED TO A DEPTH OF 3". ANNUAL AND PERENNIAL BEDS SHALL BE MULCHED TO A DEPTH OF 2". USE UNCOLORED, SHREDDED BARK MULCH AGED AT LEAST SIX MONTHS FOR ALL BEDS.

11. GUARANTEE: GUARANTEE ALL PLANTS AND LAWNS FOR A MINIMUM OF 1 YEAR TO BE ALIVE AND IN VIGOROUS GROWING CONDITION AT THE END OF THE GUARANTEE PERIOD. THE GUARANTEE PERIOD FOR ALL PLANTS SHALL BEGIN UPON APPROVAL AS SPECIFIED UNDER CONDITIONAL ACCEPTANCE. PLANT MATERIALS AND LAWNS APPROVED IN THE SPRING SHALL BE ALIVE AND IN SATISFACTORY GROWTH ON JUNE 1 OF THE FOLLOWING YEAR; PLANTING DONE IN LATE FALL (AFTER NOVEMBER 1ST) SHALL BE MAINTAINED AND GUARANTEED UNTIL THE SECOND SPRING'S LEAFING. REPLACEMENTS: ALL PLANTS SHALL BE FREE OF DEAD OR DYING BRANCHES AND BRANCH TIPS, AND SHALL BEAR FOLIAGE OF A NORMAL DENSITY, SIZE AND COLOR. PROMPTLY REMOVE DEAD, UNSIGHTLY, UNHEALTHY, OR EXCESSIVELY PRUNED PLANTS. THESE AND ANY PLANTS MISSING DUE TO THE CONTRACTOR'S NEGLIGENCE, SHALL BE REPLACED OR ADDED WITH THE SAME KIND AND SIZE AS ORIGINALLY SPECIFIED AS SOON AS CONDITIONS PERMIT. METHOD OF REPLACEMENT SHALL BE THE SAME AS SPECIFIED FOR THE ORIGINAL PLANTING WITH REPLACEMENTS MATCHING ADJACENT SPECIMENS OF THE SAME SPECIES. REPLACEMENTS SHALL BE MADE AS MANY TIMES AS NECESSARY TO ENSURE HEALTHY PLANTS AND THEY SHALL BE MAINTAINED AND GUARANTEED. REPLACEMENTS SHALL BE MADE AT THE CONTRACTOR'S EXPENSE AND SHALL BE GUARANTEED FOR ONE FULL YEAR FROM TIME OF REPLACEMENT.

12. LAWN SEEDING MIXTURE:
    15 % PERENNIAL RYEGRASS (BLEND OF 3 IMPROVED HYBRIDS)
    25 % FINE LEAF OR CREEPING FESCUE (BLEND OF 3 IMPROVED HYBRIDS)
    60 % KENTUCKY BLUEGRASS (BLEND OF 3 IMPROVED HYBRIDS)
    SEEDING RATE: 5 LBS/1,000 S.F.
    SEEDING DATES: AUGUST 15 – OCTOBER 15 AND MARCH 15 – JUNE 15,
    UNLESS OTHERWISE APPROVED BY OWNER.

13. ALL DISTURBED AREAS NOT OTHERWISE DEVELOPED SHALL BE SEEDED WITH THE LAWN SEEDING MIXTURE.

14. IF SHEET IS LESS THAN 24" X 36" IT IS A REDUCED PRINT AND SHOULD BE SCALED ACCORDINGLY.

LANDSCAPE PLANT SCHEDULE (master list)

TREES

KEY	QUANTITY	BOTANICAL NAME	COMMON NAME	ROOT	SIZE	COMMENTS
CJ	13	Cercidiphyllum japonicum	KATSURA TREE	B&B	3 1/2" – 4" CAL.	UNIFORM, WELL DEV. 6' MIN. BRANCHING HT.
GB	11	Ginko biloba 'Princeton Sentry'	GINKO (MALE SPECIMENS ONLY)	B&B	3 1/2" – 4" CAL.	UNIFORM, WELL DEV. 6' MIN. BRANCHING HT.
GT	10	Gleditsia triacanthos var. inermis 'Halka'	HALKA THORNLESS HONEYLOCUST	B&B	3 1/2" – 4" CAL.	UNIFORM, WELL DEV. 6' MIN. BRANCHING HT.
PC	16	Pyrus calleryana	CALLERY PEAR	B&B	3 1/2" – 4" CAL.	UNIFORM, WELL DEV. 6' MIN. BRANCHING HT.
QR	13	Quercus rubra	RED OAK	B&B	3 1/2" – 4" CAL.	UNIFORM, WELL DEV. 6' MIN. BRANCHING HT.
ZS	6	Zelkova serrata 'Village Green'	VILLAGE GREEN ZELKOVA	B&B	3 1/2" – 4" CAL.	UNIFORM, WELL DEV. 6' MIN. BRANCHING HT.

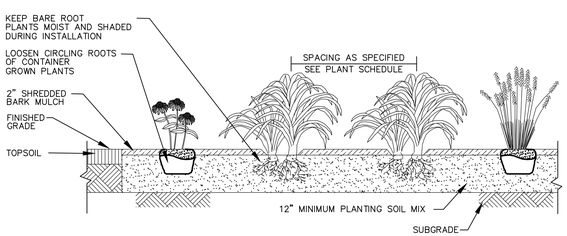

NOTES:
1. ROTOTILL FERTILIZER, LIME, AND OTHER AMENDMENTS INTO SOIL PRIOR TO PLANTING AND IN ACCORDANCE WITH SOIL ANALYSIS RECOMMENDATIONS.

2. THOROUGHLY WATER ALL PLANTING BEDS IMMEDIATELY AFTER PLANTING.

3. ADJUST BULB PLANTING DEPTH AS RECOMMENDED BY BULB SUPPLIER.

ANNUAL/PERENNIAL AND GROUNDCOVER BEDS

N.T.S. BLLD-002

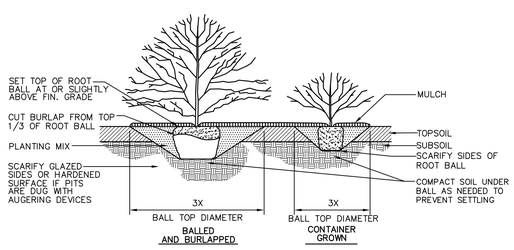

NOTE:
* IN AREAS OF MASS PLANTING, CONTINUOUSLY EXCAVATE AND MULCH ENTIRE BED.

SHRUB PLANTING

N.T.S. BLLD-005

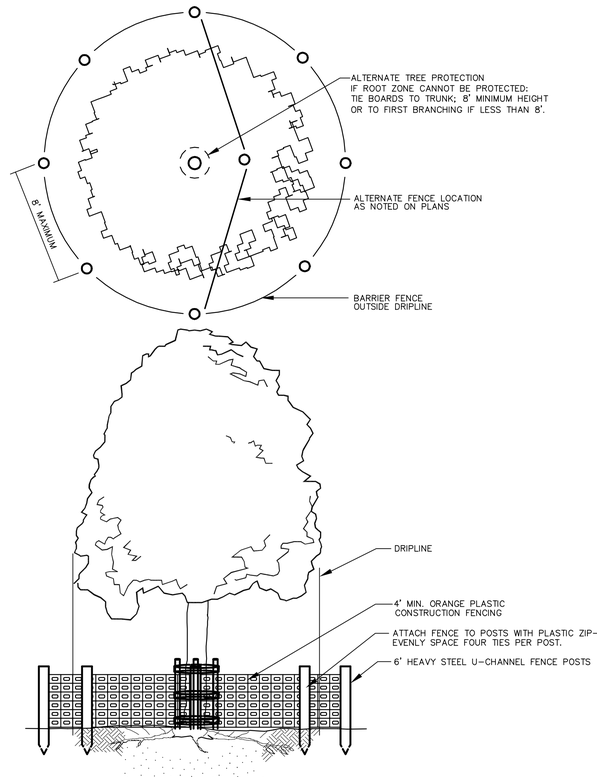

TREE PROTECTION

N.T.S. BLLD-001

FOR PERMITTING PURPOSES ONLY NOT RELEASED FOR CONSTRUCTION

BL Companies
ARCHITECTURE
ENGINEERING
PLANNING
LANDSCAPE ARCHITECTURE
LAND SURVEYING
ENVIRONMENTAL SCIENCES

355 Research Parkway
Meriden, CT 06450
(203) 630-1406
(203) 630-2615 Fax

VILLAGE STREET AND TRANSIT PATHWAYS

VILLAGE STREET
MANSFIELD, CONNECTICUT

REVISIONS
No. Date Desc.

Designed	J.W.F.
Drawn	E.L.Z. / J.I.G.
Checked	
Approved	
Scale	NTS
Project No.	10C3550
Date	8/15/11
CAD File	TLDS10C355001

Title
LANDSCAPE DETAILS AND NOTES

Sheet No.
LDS-5

Xref (s): X:\03C3567700 ; X:\03C3567701 ; X:\08C3079801 ; XC03C3567001 ; X:\08C3079802 ; X:\10C3555001 ; IB\10C3555001 ; X:\10C3555002 ; XL10C3555001 ; X:\10C3555003

Sep 15, 2011 2:06pm EZelazny K:\Jobs\03\3567\dwg\TLDS10C355001.dwg
Layout: LDS-5 24X36 NTS

THESE DRAWINGS SHALL NOT BE UTILIZED BY ANY PERSON, FIRM OR CORPORATION WITHOUT THE SPECIFIC WRITTEN PERMISSION OF BL COMPANIES

STRIPE LEGEND

SWL	4" SOLID WHITE LINE
SDYL	4" SOLID DOUBLE YELLOW LINE
SWSB	12" SOLID WHITE STOP BAR
SYL	4" SOLID YELLOW LINE
BWL	4" BROKEN WHITE LINE (10' DASH, 30' SPACE)
(T)	12" WHITE LINE EACH SIDE OF DECORATIVE CROSSWALK TOWN MAINTAINED

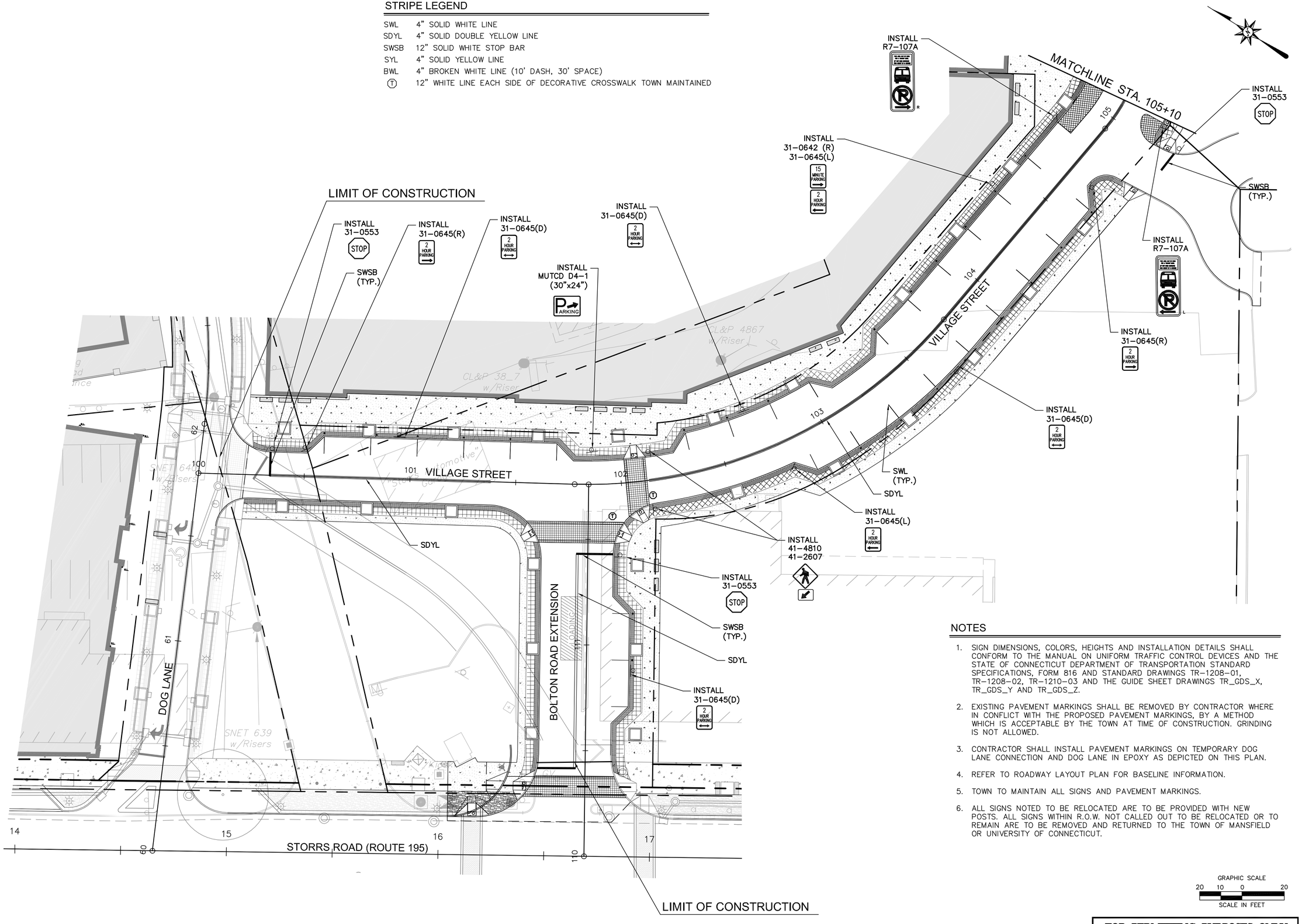

NOTES

1. SIGN DIMENSIONS, COLORS, HEIGHTS AND INSTALLATION DETAILS SHALL CONFORM TO THE MANUAL ON UNIFORM TRAFFIC CONTROL DEVICES AND THE STATE OF CONNECTICUT DEPARTMENT OF TRANSPORTATION STANDARD SPECIFICATIONS, FORM 816 AND STANDARD DRAWINGS TR-1208-01, TR-1208-02, TR-1210-03 AND THE GUIDE SHEET DRAWINGS TR_GDS_X, TR_GDS_Y AND TR_GDS_Z.
2. EXISTING PAVEMENT MARKINGS SHALL BE REMOVED BY CONTRACTOR WHERE IN CONFLICT WITH THE PROPOSED PAVEMENT MARKINGS, BY A METHOD WHICH IS ACCEPTABLE BY THE TOWN AT TIME OF CONSTRUCTION. GRINDING IS NOT ALLOWED.
3. CONTRACTOR SHALL INSTALL PAVEMENT MARKINGS ON TEMPORARY DOG LANE CONNECTION AND DOG LANE IN EPOXY AS DEPICTED ON THIS PLAN.
4. REFER TO ROADWAY LAYOUT PLAN FOR BASELINE INFORMATION.
5. TOWN TO MAINTAIN ALL SIGNS AND PAVEMENT MARKINGS.
6. ALL SIGNS NOTED TO BE RELOCATED ARE TO BE PROVIDED WITH NEW POSTS. ALL SIGNS WITHIN R.O.W. NOT CALLED OUT TO BE RELOCATED OR TO REMAIN ARE TO BE REMOVED AND RETURNED TO THE TOWN OF MANSFIELD OR UNIVERSITY OF CONNECTICUT.

GRAPHIC SCALE
20 10 0 20
SCALE IN FEET

FOR PERMITTING PURPOSES ONLY
NOT RELEASED FOR CONSTRUCTION

BL Companies
ARCHITECTURE
ENGINEERING
PLANNING
LANDSCAPE ARCHITECTURE
LAND SURVEYING
ENVIRONMENTAL SCIENCES

355 Research Parkway
Meriden, CT 06450
(203) 630-1406
(203) 630-2615 Fax

VILLAGE STREET AND TRANSIT PATHWAYS

VILLAGE STREET
MANSFIELD, CONNECTICUT

REVISIONS
No. Date Desc.

Designed	J.I.G.
Drawn	E.L.Z. / J.I.G.
Checked	
Approved	
Scale	1"=20'
Project No.	10C3550
Date	8/15/11
CAD File	TSPM10C355001

Title
SIGNING AND PAVEMENT MARKINGS PLAN

Sheet No.
SPM-1

Sep 15, 2011 1:09pm EZelazny K:\Jobs03\03c667\dwg\TSPM10C355001.dwg
Layout: SPM-1 24X36 20sc

Xref (s): ; XR03C66700 ; XR03C66701 ; XY03c066701 ; XR08C3079801 ; XC03C667001 ; XR08C3079802 ; XR10C355001 ; BD10C355001 ; XR10C355002 ; XT10C355001 ; XT08C3079801

THESE DRAWINGS SHALL NOT BE UTILIZED BY ANY PERSON, FIRM OR CORPORATION WITHOUT THE SPECIFIC WRITTEN PERMISSION OF BL COMPANIES

STRIPE LEGEND

SWL	4" SOLID WHITE LINE
SDYL	4" SOLID DOUBLE YELLOW LINE
SWSB	12" SOLID WHITE STOP BAR
SYL	4" SOLID YELLOW LINE
BWL	4" BROKEN WHITE LINE (10' DASH, 30' SPACE)
(T)	12" WHITE LINE EACH SIDE OF DECORATIVE CROSSWALK TOWN MAINTAINED

NOTES

1. SIGN DIMENSIONS, COLORS, HEIGHTS AND INSTALLATION DETAILS SHALL CONFORM TO THE MANUAL ON UNIFORM TRAFFIC CONTROL DEVICES AND THE STATE OF CONNECTICUT DEPARTMENT OF TRANSPORTATION STANDARD SPECIFICATIONS, FORM 816 AND STANDARD DRAWINGS TR-1208-01, TR-1208-02, TR-1210-03 AND THE GUIDE SHEET DRAWINGS TR_GDS_X, TR_GDS_Y AND TR_GDS_Z.
2. EXISTING PAVEMENT MARKINGS SHALL BE REMOVED BY CONTRACTOR WHERE IN CONFLICT WITH THE PROPOSED PAVEMENT MARKINGS, BY A METHOD WHICH IS ACCEPTABLE BY THE TOWN AT TIME OF CONSTRUCTION. GRINDING IS NOT ALLOWED.
3. CONTRACTOR SHALL INSTALL PAVEMENT MARKINGS ON TEMPORARY DOG LANE CONNECTION AND DOG LANE IN EPOXY AS DEPICTED ON THIS PLAN.
4. REFER TO ROADWAY LAYOUT PLAN FOR BASELINE INFORMATION.
5. TOWN TO MAINTAIN ALL SIGNS AND PAVEMENT MARKINGS.
6. ALL SIGNS NOTED TO BE RELOCATED ARE TO BE PROVIDED WITH NEW POSTS. ALL SIGNS WITHIN R.O.W. NOT CALLED OUT TO BE RELOCATED OR TO REMAIN ARE TO BE REMOVED AND RETURNED TO THE TOWN OF MANSFIELD OR UNIVERSITY OF CONNECTICUT.

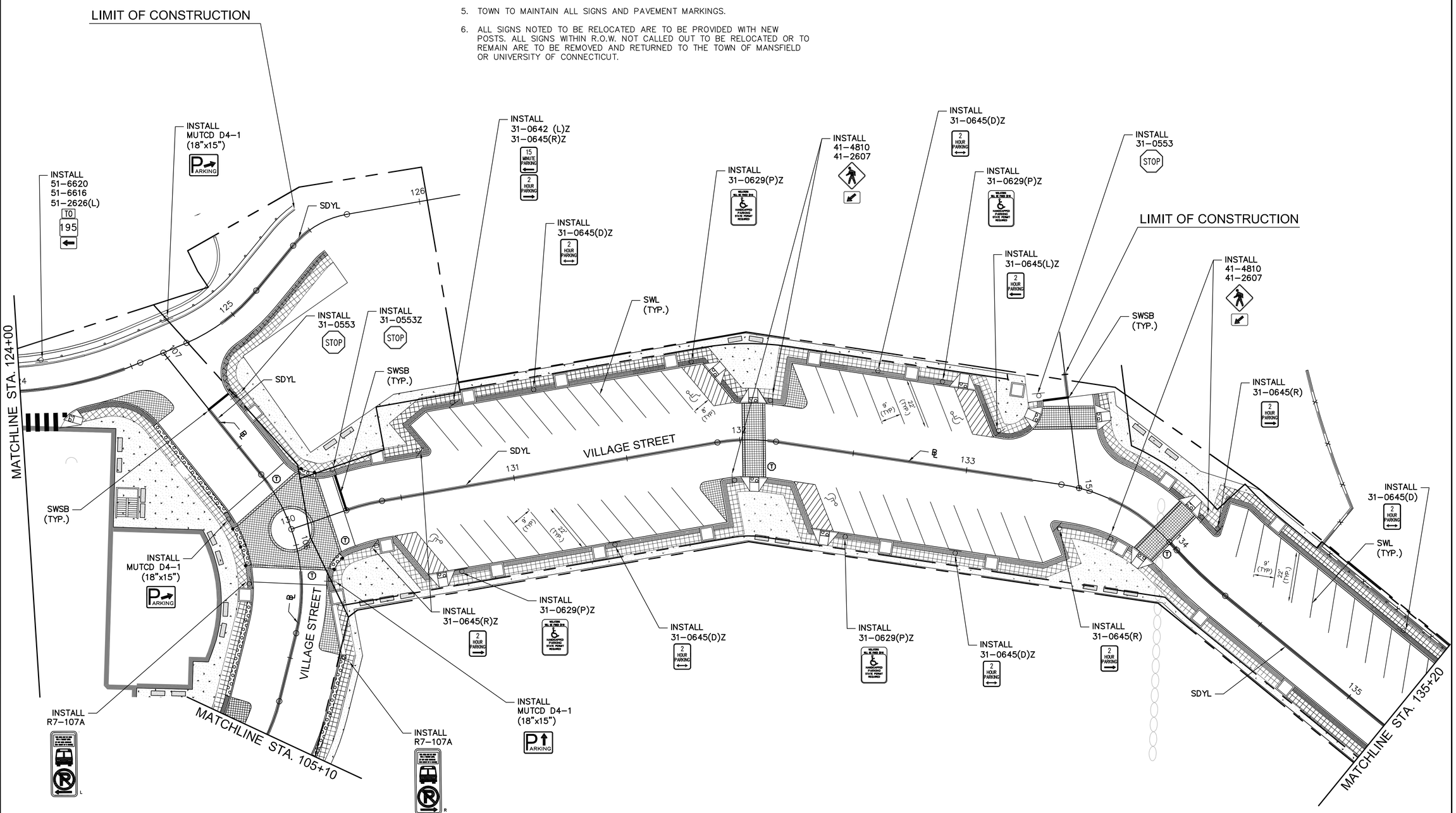

FOR PERMITTING PURPOSES ONLY NOT RELEASED FOR CONSTRUCTION

BL Companies
ARCHITECTURE
ENGINEERING
PLANNING
LANDSCAPE ARCHITECTURE
LAND SURVEYING
ENVIRONMENTAL SCIENCES

355 Research Parkway
Meriden, CT 06450
(203) 630-1406
(203) 630-2615 Fax

VILLAGE STREET AND TRANSIT PATHWAYS

VILLAGE STREET
MANSFIELD, CONNECTICUT

REVISIONS

No.	Date	Desc.

Designed	J.I.G.
Drawn	E.L.Z. / J.I.G.
Checked	
Approved	
Scale	1"=20'
Project No.	10C3550
Date	8/15/11
CAD File	TSPM10C355001

Title

SIGNING AND PAVEMENT MARKINGS PLAN

Sheet No.

SPM-2

Xref (s): ; XR03C667001 ; XR03C667701 ; XR08C3079B01 ; XR08C3079B02 ; XR10C355001 ; BD10C355001 ; XR10C355002 ; XT10C355001 ; XT08C3079B01

Sep 15, 2011 1:09pm EZelazny K:\obs\03\03c667\dwg\TSPM10C355001.dwg
Layout: SPM-2 24X36 20sc

THESE DRAWINGS SHALL NOT BE UTILIZED BY ANY PERSON, FIRM OR CORPORATION WITHOUT THE SPECIFIC WRITTEN PERMISSION OF BL COMPANIES

STRIPE LEGEND

SWL	4" SOLID WHITE LINE
SDYL	4" SOLID DOUBLE YELLOW LINE
SWSB	12" SOLID WHITE STOP BAR
SYL	4" SOLID YELLOW LINE
BWL	4" BROKEN WHITE LINE (10' DASH, 30' SPACE)
Ⓣ	12" WHITE LINE EACH SIDE OF DECORATIVE CROSSWALK TOWN MAINTAINED

NOTES

1. SIGN DIMENSIONS, COLORS, HEIGHTS AND INSTALLATION DETAILS SHALL CONFORM TO THE MANUAL ON UNIFORM TRAFFIC CONTROL DEVICES AND THE STATE OF CONNECTICUT DEPARTMENT OF TRANSPORTATION STANDARD SPECIFICATIONS, FORM 816 AND STANDARD DRAWINGS TR-1208-01, TR-1208-02, TR-1210-03 AND THE GUIDE SHEET DRAWINGS TR_GDS_X, TR_GDS_Y AND TR_GDS_Z.
2. EXISTING PAVEMENT MARKINGS SHALL BE REMOVED BY CONTRACTOR WHERE IN CONFLICT WITH THE PROPOSED PAVEMENT MARKINGS, BY A METHOD WHICH IS ACCEPTABLE BY THE TOWN AT TIME OF CONSTRUCTION. GRINDING IS NOT ALLOWED.
3. CONTRACTOR SHALL INSTALL PAVEMENT MARKINGS ON TEMPORARY DOG LANE CONNECTION AND DOG LANE IN EPOXY AS DEPICTED ON THIS PLAN.
4. REFER TO ROADWAY LAYOUT PLAN FOR BASELINE INFORMATION.
5. TOWN TO MAINTAIN ALL SIGNS AND PAVEMENT MARKINGS.
6. ALL SIGNS NOTED TO BE RELOCATED ARE TO BE PROVIDED WITH NEW POSTS. ALL SIGNS WITHIN R.O.W. NOT CALLED OUT TO BE RELOCATED OR TO REMAIN ARE TO BE REMOVED AND RETURNED TO THE TOWN OF MANSFIELD OR UNIVERSITY OF CONNECTICUT.

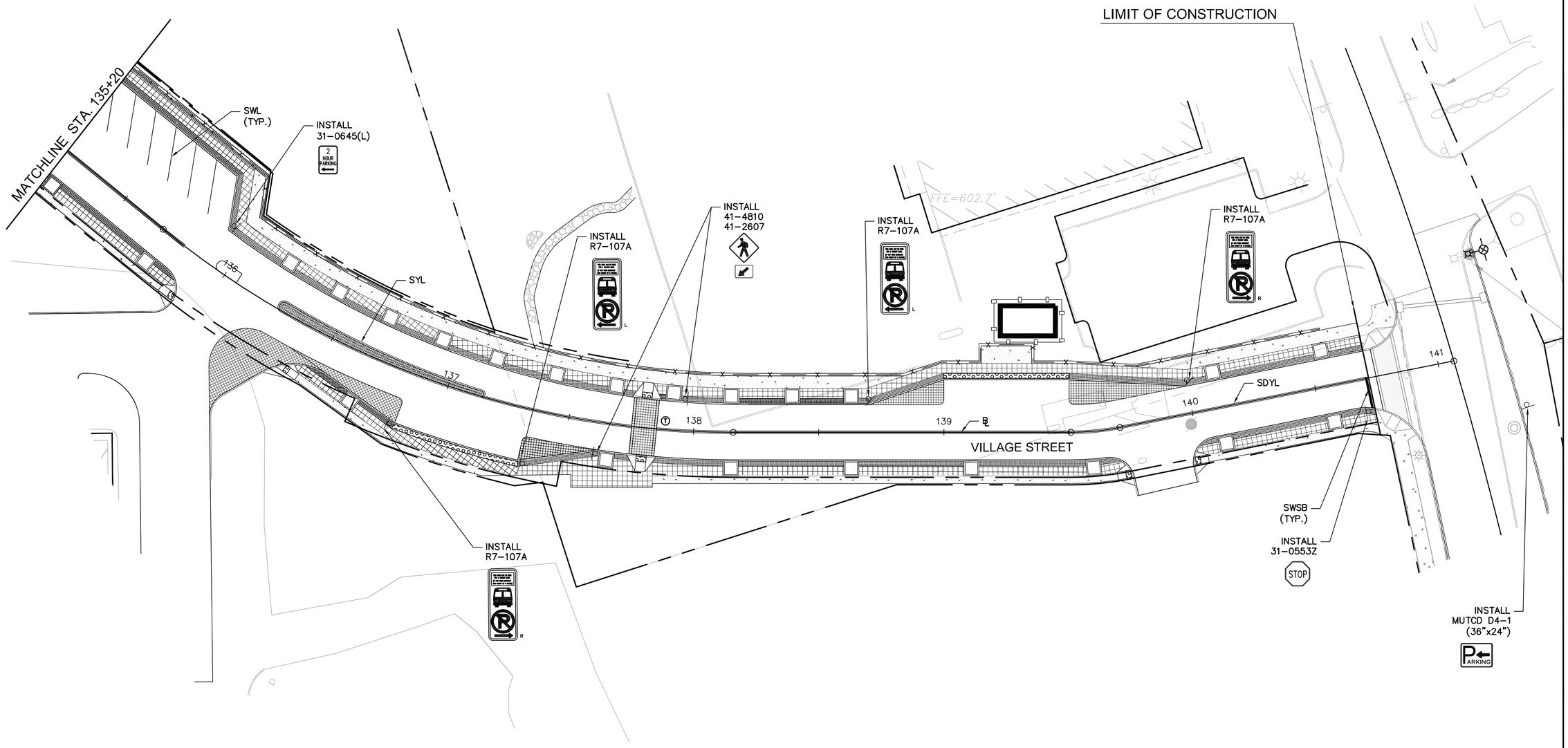

FOR PERMITTING PURPOSES ONLY
NOT RELEASED FOR CONSTRUCTION

BL Companies
ARCHITECTURE
ENGINEERING
PLANNING
LANDSCAPE ARCHITECTURE
LAND SURVEYING
ENVIRONMENTAL SCIENCES

355 Research Parkway
Meriden, CT 06450
(203) 630-1406
(203) 630-2615 Fax

VILLAGE STREET AND TRANSIT PATHWAYS

VILLAGE STREET
MANSFIELD, CONNECTICUT

REVISIONS

No.	Date	Desc.

Designed	J.I.G.
Drawn	E.L.Z. / J.I.G.
Checked	
Approved	
Scale	1"=20'
Project No.	10C3550
Date	8/15/11
CAD File	TSPM10C355001

Title

SIGNING AND PAVEMENT MARKINGS PLAN

Sheet No.

SPM-3

Xref (s): ; XR03C667700 ; XR03C667701 ; XT03C667701 ; XR08C3079B01 ; XC03C667001 ; XR08C3079B02 ; XR10C355001 ; BD10C355001 ; XR10C355002 ; XT10C355001 ; XT08C3079B01

Sep 15, 2011 1:09pm EZelazny K:\obs\03\03c667\dwg\TSPM10C355001.dwg
Layout: SPM-3 24X36 20sc

THESE DRAWINGS SHALL NOT BE UTILIZED BY ANY PERSON, FIRM OR CORPORATION WITHOUT THE SPECIFIC WRITTEN PERMISSION OF BL COMPANIES

STRIPE LEGEND

SWL	4" SOLID WHITE LINE
SDYL	4" SOLID DOUBLE YELLOW LINE
SWSB	12" SOLID WHITE STOP BAR
SYL	4" SOLID YELLOW LINE
BWL	4" BROKEN WHITE LINE (10' DASH, 30' SPACE)
Ⓣ	12" WHITE LINE EACH SIDE OF DECORATIVE CROSSWALK TOWN MAINTAINED

NOTES

1. SIGN DIMENSIONS, COLORS, HEIGHTS AND INSTALLATION DETAILS SHALL CONFORM TO THE MANUAL ON UNIFORM TRAFFIC CONTROL DEVICES AND THE STATE OF CONNECTICUT DEPARTMENT OF TRANSPORTATION STANDARD SPECIFICATIONS, FORM 816 AND STANDARD DRAWINGS TR-1208-01, TR-1208-02, TR-1210-03 AND THE GUIDE SHEET DRAWINGS TR_GDS_X, TR_GDS_Y AND TR_GDS_Z.
2. EXISTING PAVEMENT MARKINGS SHALL BE REMOVED BY CONTRACTOR WHERE IN CONFLICT WITH THE PROPOSED PAVEMENT MARKINGS, BY A METHOD WHICH IS ACCEPTABLE BY THE TOWN AT TIME OF CONSTRUCTION. GRINDING IS NOT ALLOWED.
3. CONTRACTOR SHALL INSTALL PAVEMENT MARKINGS ON TEMPORARY DOG LANE CONNECTION AND DOG LANE IN EPOXY AS DEPICTED ON THIS PLAN.
4. REFER TO ROADWAY LAYOUT PLAN FOR BASELINE INFORMATION.
5. TOWN TO MAINTAIN ALL SIGNS AND PAVEMENT MARKINGS.
6. ALL SIGNS NOTED TO BE RELOCATED ARE TO BE PROVIDED WITH NEW POSTS. ALL SIGNS WITHIN R.O.W. NOT CALLED OUT TO BE RELOCATED OR TO REMAIN ARE TO BE REMOVED AND RETURNED TO THE TOWN OF MANSFIELD OR UNIVERSITY OF CONNECTICUT.

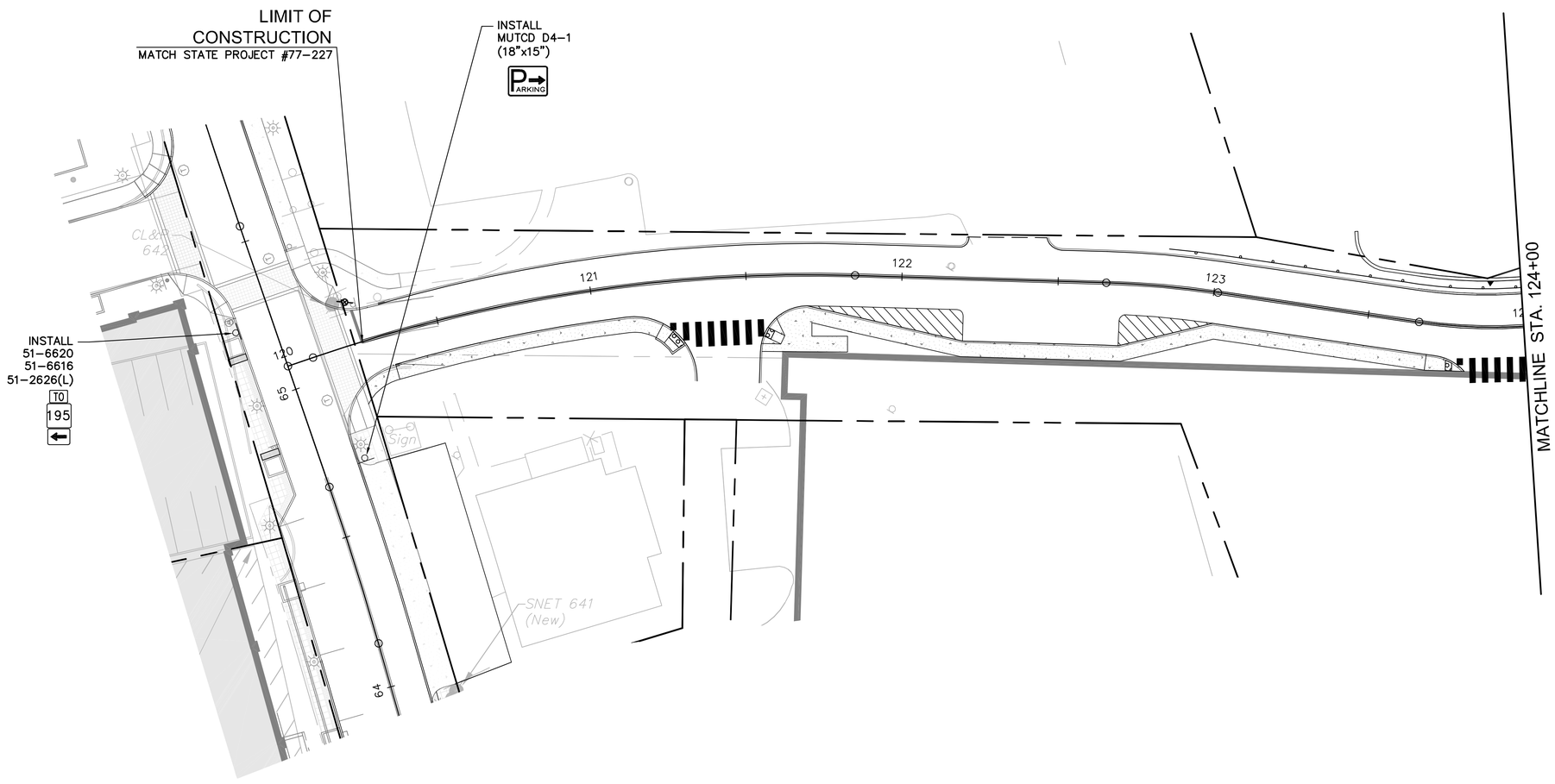

GRAPHIC SCALE
20 10 0 20
SCALE IN FEET

FOR PERMITTING PURPOSES ONLY NOT RELEASED FOR CONSTRUCTION

BL Companies
ARCHITECTURE
ENGINEERING
PLANNING
LANDSCAPE ARCHITECTURE
LAND SURVEYING
ENVIRONMENTAL SCIENCES

355 Research Parkway
Meriden, CT 06450
(203) 630-1406
(203) 630-2615 Fax

VILLAGE STREET AND TRANSIT PATHWAYS

VILLAGE STREET
MANSFIELD, CONNECTICUT

REVISIONS

No.	Date	Desc.

Designed	J.I.G.
Drawn	E.L.Z. / J.I.G.
Checked	
Approved	
Scale	1"=20'
Project No.	10C3550
Date	8/15/11
CAD File	TSPM10C355001

Title

SIGNING AND PAVEMENT MARKINGS PLAN

Sheet No.

SPM-4

Xref (s): ; XR03C667001 ; XR03C667701 ; XR08C3079B01 ; XC03C667Q01 ; XR08C3079B02 ; XR10C355001 ; IB10C355001 ; XR10C355002 ; XT10C355001 ; XT08C3079B01

Sep 15, 2011 1:09pm EZelazny K:\Jobs\03\03s667\dwg\TSPM10C355001.dwg
Layout: SPM-4 24X36 20sc

THESE DRAWINGS SHALL NOT BE UTILIZED BY ANY PERSON, FIRM OR CORPORATION WITHOUT THE SPECIFIC WRITTEN PERMISSION OF BL COMPANIES

EROSION CONTROL LEGEND

CONTROL MEASURE	ILLUSTRATION
INLET PROTECTION	SS SILT SACK; HB HAY BALE
SILT FENCE	SF GSF
TEMPORARY MATERIALS STOCKPILE AREA OF NON REC SOIL	SM
CONSTRUCTION ENTRANCE	CE
OUTLET PROTECTION	HB HAY BALE

CONTROL MEASURE	ILLUSTRATION
TEMPORARY DIVERSION SWALE	TDD
SEDIMENT TRAP OUTLET	
EROSION CONTROL BLANKET	ECB
RIPRAP	RR
LIMIT OF CONSTRUCTION	LOC

SOIL TYPES

3 – RIDGEBURY, LEICESTER, AND WHITMAN SOILS, EXTREMELY STONY, HYDROLOGIC SOIL GROUP – D

62D – CANTON AND CHARLTON SOILS, EXTREMELY STONY, HYDROLOGIC SOIL GROUP – B

73C – CHARLTON–CHATFIELD COMPLEX, VERY ROCKY, HYDROLOGIC SOIL GROUP – B

45B – WOODBRIDGE FINE SANDY LOAM, 3 TO 8 PERCENT SLOPES, HYDROLOGIC SOIL GROUP – C

306 UDORTHENTS–URBAN LAND COMPLEX, HYDROLOGIC SOIL GROUP – C

(SOILS TYPES REFERENCED FROM THE NDCS SOIL SURVEY GEOGRAPHIC (SSURGO) DATABASE FOR CONNECTICUT, 2005.)

SOIL TYPE LEGEND

SOIL TYPE BOUNDARY (APPROXIMATE)

62D SOIL TYPE

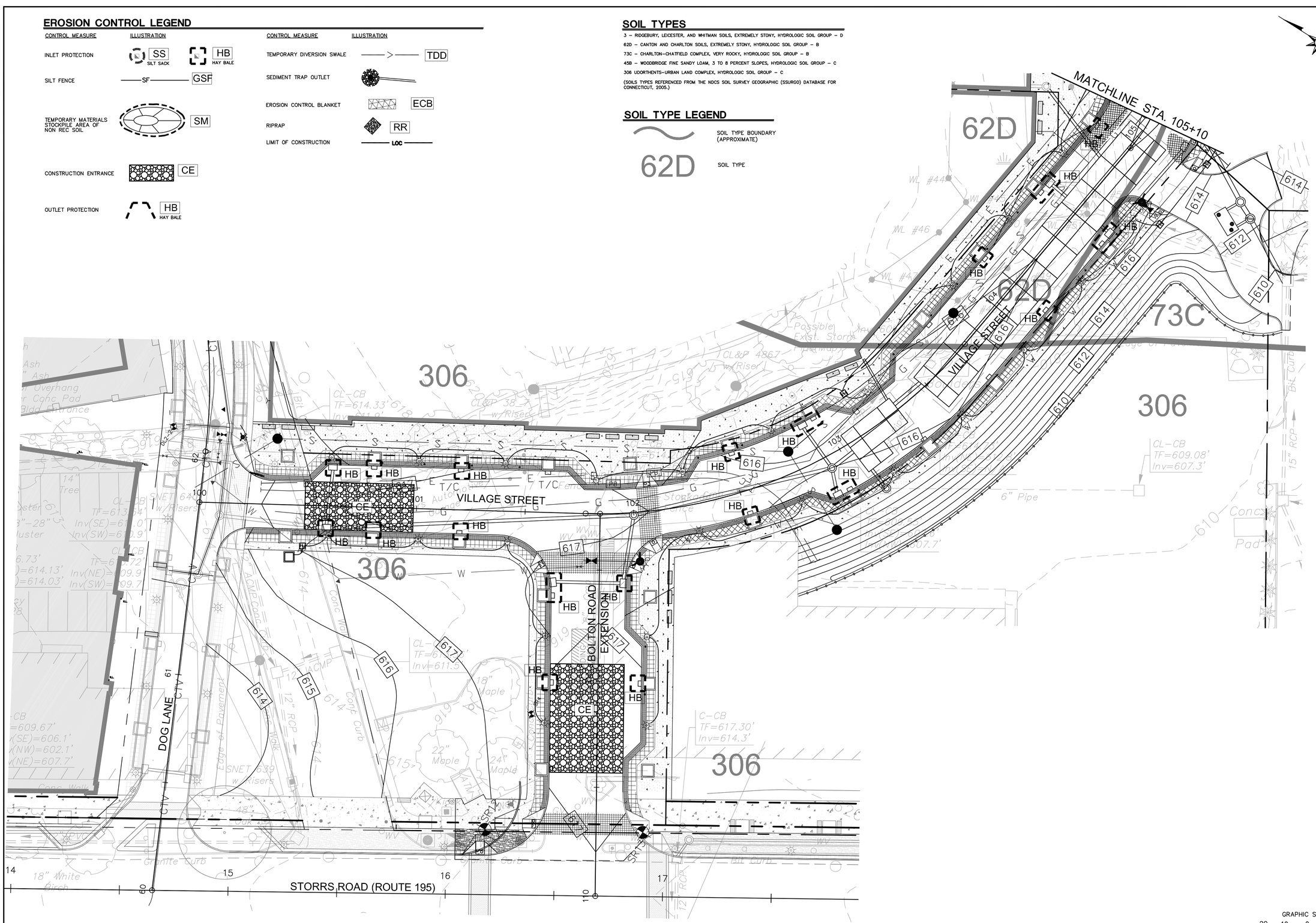

FOR PERMITTING PURPOSES ONLY
NOT RELEASED FOR CONSTRUCTION

BL Companies
ARCHITECTURE
ENGINEERING
PLANNING
LANDSCAPE ARCHITECTURE
LAND SURVEYING
ENVIRONMENTAL SCIENCES

355 Research Parkway
Meriden, CT 06450
(203) 630-1406
(203) 630-2615 Fax

VILLAGE STREET AND TRANSIT PATHWAYS

VILLAGE STREET
MANSFIELD, CONNECTICUT

REVISIONS

No.	Date	Desc.

Designed	J.I.G.
Drawn	E.L.Z. / J.I.G.
Checked	
Approved	
Scale	1"=20'
Project No.	10C3550
Date	8/15/11
CAD File	TEC10C355001

Title

SEDIMENTATION AND EROSION CONTROL PLAN

Sheet No.

EC-1

Sep 15, 2011 1:36pm EZelazny K:\Jobs03\03c667\dwg\TEC10C355001.dwg
Layout: EC-1 24X36 20sc

THESE DRAWINGS SHALL NOT BE UTILIZED BY ANY PERSON, FIRM OR CORPORATION WITHOUT THE SPECIFIC WRITTEN PERMISSION OF BL COMPANIES

Xref (s): ; XR03C66700 ; XR03C66701 ; XY03c066701 ; XR08C3079B01 ; XC03C667001 ; XR08C3079B02 ; XR10C355001 ; BD10C355001 ; XR10C355002 ; XR10C355003

EROSION CONTROL LEGEND

CONTROL MEASURE	ILLUSTRATION
INLET PROTECTION	SS SILT SACK / HB HAY BALE
SILT FENCE	SF — GSF
TEMPORARY MATERIALS STOCKPILE AREA OF NON REC SOIL	SM
CONSTRUCTION ENTRANCE	CE
OUTLET PROTECTION	HB HAY BALE

CONTROL MEASURE	ILLUSTRATION
TEMPORARY DIVERSION SWALE	TDD
SEDIMENT TRAP OUTLET	
EROSION CONTROL BLANKET	ECB
RIPRAP	RR
LIMIT OF CONSTRUCTION	LOC
NPDES LIMIT LINE	

SOIL TYPES

3 – RIDGEBURY, LEICESTER, AND WHITMAN SOILS, EXTREMELY STONY, HYDROLOGIC SOIL GROUP – D

62D – CANTON AND CHARLTON SOILS, EXTREMELY STONY, HYDROLOGIC SOIL GROUP – B

73C – CHARLTON–CHATFIELD COMPLEX, VERY ROCKY, HYDROLOGIC SOIL GROUP – B

45B – WOODBRIDGE FINE SANDY LOAM, 3 TO 8 PERCENT SLOPES, HYDROLOGIC SOIL GROUP – C

306 UDORTHENTS–URBAN LAND COMPLEX, HYDROLOGIC SOIL GROUP – C

(SOILS TYPES REFERENCED FROM THE NDCS SOIL SURVEY GEOGRAPHIC (SSURGO) DATABASE FOR CONNECTICUT, 2005.)

SOIL TYPE LEGEND

SOIL TYPE BOUNDARY (APPROXIMATE)

62D SOIL TYPE

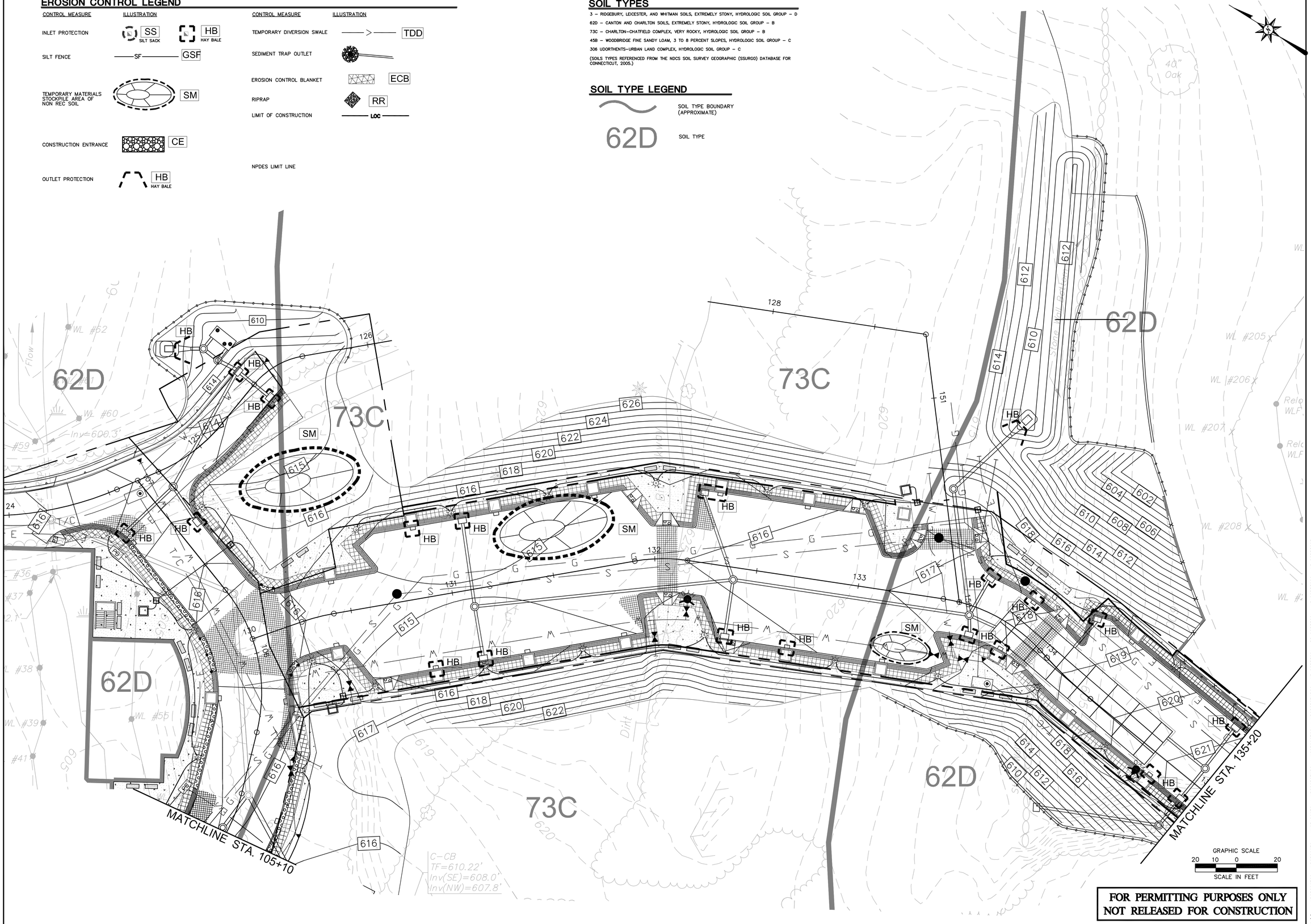

FOR PERMITTING PURPOSES ONLY
NOT RELEASED FOR CONSTRUCTION

BL Companies
ARCHITECTURE
ENGINEERING
PLANNING
LANDSCAPE ARCHITECTURE
LAND SURVEYING
ENVIRONMENTAL SCIENCES

355 Research Parkway
Meriden, CT 06450
(203) 630-1406
(203) 630-2615 Fax

VILLAGE STREET AND TRANSIT PATHWAYS

VILLAGE STREET
MANSFIELD, CONNECTICUT

REVISIONS

No.	Date	Desc.

Designed	J.I.G.
Drawn	E.L.Z. / J.I.G.
Checked	
Approved	
Scale	1"=20'
Project No.	10C3550
Date	8/15/11
CAD File	TEC10C355001

Title

SEDIMENTATION AND EROSION CONTROL PLAN

Sheet No.

EC-2

Xref (s): ; XR03C566700 ; XR03C566701 ; XY03C566701 ; XR08C3079B01 ; XC03C567001 ; XR08C3079B02 ; XR10C355001 ; IB10C355001 ; XR10C355002 ; XR10C355003

Sep 15, 2011 1:36pm EZelazny K:\obs03\03c667\dwg\TEC10C355001.dwg
Layout: EC-2 24X36 20sc

THESE DRAWINGS SHALL NOT BE UTILIZED BY ANY PERSON, FIRM OR CORPORATION WITHOUT THE SPECIFIC WRITTEN PERMISSION OF BL COMPANIES

EROSION CONTROL LEGEND

CONTROL MEASURE	ILLUSTRATION
INLET PROTECTION	SS SILT SACK / HB HAY BALE
SILT FENCE	SF — GSF
TEMPORARY MATERIALS STOCKPILE AREA OF NON REC SOIL	SM
CONSTRUCTION ENTRANCE	CE
OUTLET PROTECTION	HB HAY BALE

CONTROL MEASURE	ILLUSTRATION
TEMPORARY DIVERSION SWALE	TDD
SEDIMENT TRAP OUTLET	
EROSION CONTROL BLANKET	ECB
RIPRAP	RR
LIMIT OF CONSTRUCTION	LOC

SOIL TYPES

3 – RIDGEBURY, LEICESTER, AND WHITMAN SOILS, EXTREMELY STONY, HYDROLOGIC SOIL GROUP – D

62D – CANTON AND CHARLTON SOILS, EXTREMELY STONY, HYDROLOGIC SOIL GROUP – B

73C – CHARLTON–CHATFIELD COMPLEX, VERY ROCKY, HYDROLOGIC SOIL GROUP – B

45B – WOODBRIDGE FINE SANDY LOAM, 3 TO 8 PERCENT SLOPES, HYDROLOGIC SOIL GROUP – C

306 UDORTHENTS–URBAN LAND COMPLEX, HYDROLOGIC SOIL GROUP – C

(SOILS TYPES REFERENCED FROM THE NDCS SOIL SURVEY GEOGRAPHIC (SSURGO) DATABASE FOR CONNECTICUT, 2005.)

SOIL TYPE LEGEND

SOIL TYPE BOUNDARY (APPROXIMATE)

62D SOIL TYPE

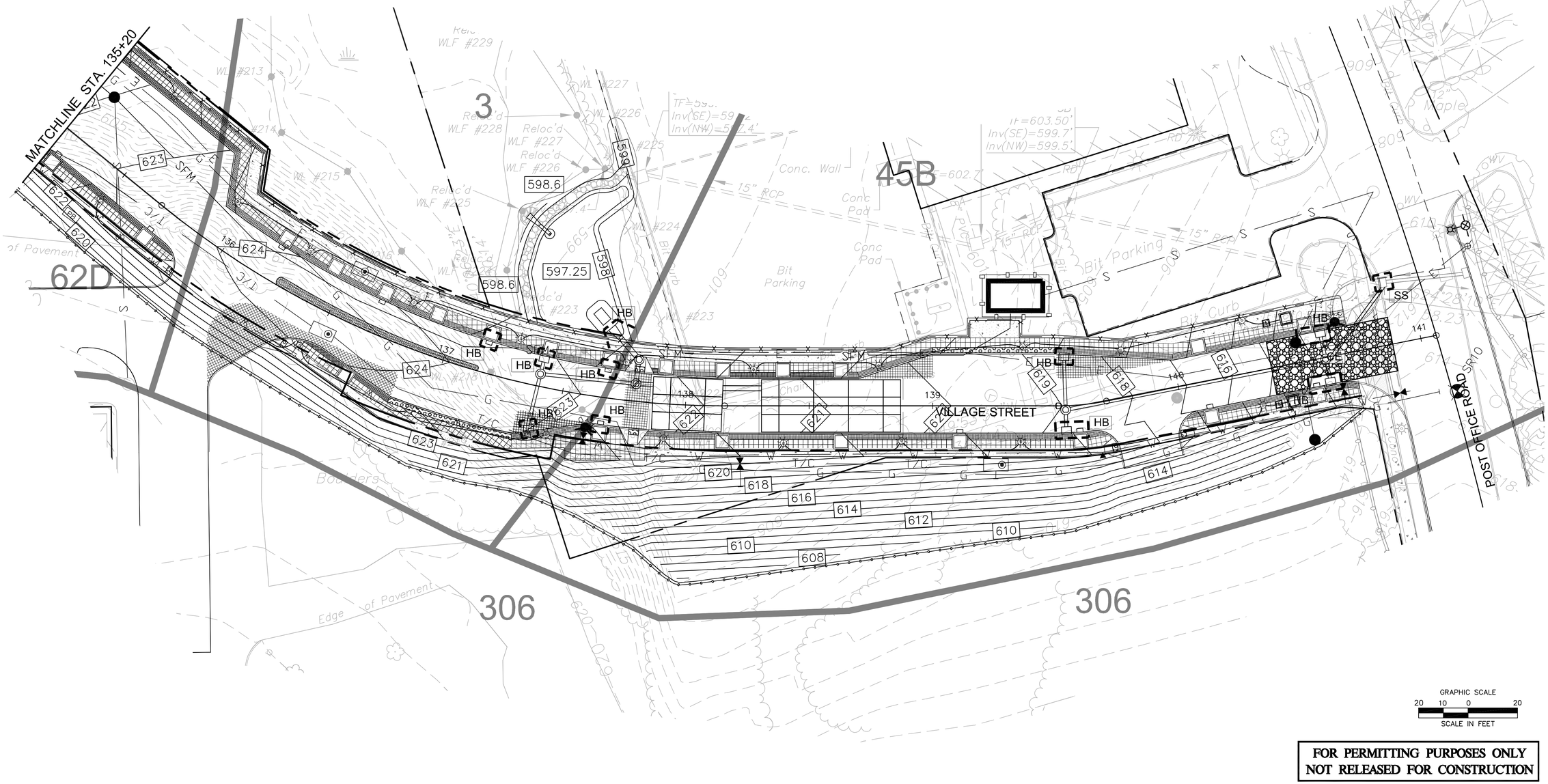

FOR PERMITTING PURPOSES ONLY
NOT RELEASED FOR CONSTRUCTION

BL Companies
ARCHITECTURE
ENGINEERING
PLANNING
LANDSCAPE ARCHITECTURE
LAND SURVEYING
ENVIRONMENTAL SCIENCES

355 Research Parkway
Meriden, CT 06450
(203) 630-1406
(203) 630-2615 Fax

VILLAGE STREET AND TRANSIT PATHWAYS

VILLAGE STREET
MANSFIELD, CONNECTICUT

REVISIONS

No.	Date	Desc.

Designed	J.I.G.
Drawn	E.L.Z. / J.I.G.
Checked	
Approved	
Scale	1"=20'
Project No.	10C3550
Date	8/15/11
CAD File	TEC10C355001

Title

SEDIMENTATION AND EROSION CONTROL PLAN

Sheet No.

EC-3

Xref (s): ; XR03C66700 ; XR03C66701 ; XY03C66701 ; XR08C30798B01 ; XC03C66701 ; XR08C30798G2 ; XR10C355001 ; IBD10C355001 ; XR10C355002 ; XR10C355003

Sep 15, 2011 1:36pm EZeazny K:\data03\03c667\dwg\TEC10C355001.dwg
Layout: EC-3 24X36 20sc

THESE DRAWINGS SHALL NOT BE UTILIZED BY ANY PERSON, FIRM OR CORPORATION WITHOUT THE SPECIFIC WRITTEN PERMISSION OF BL COMPANIES

EROSION CONTROL NOTES

SEDIMENT & EROSION CONTROL NARRATIVE

THE SEDIMENT AND EROSION CONTROL PLAN WAS DEVELOPED TO PROTECT THE EXISTING ROADWAY AND STORM DRAINAGE SYSTEMS, ADJACENT PROPERTIES, AND THE WETLAND AREA FROM SURFACE RUNOFF AND EROSION. A CONSTRUCTION SEQUENCE IS PROVIDED TO PROVIDE SURFACE RUNOFF CONTROLS PRIOR TO THE PROJECT CONSTRUCTION BEGINNING. CONTRACTOR SHALL PERFORM A DAILY INSPECTION OF ALL SEDIMENT AND EROSION CONTROLS AND MEND AND/OR REPLACE THEM AS NEEDED.

CONSTRUCTION DOCUMENTS ARE FOR USE IN STORRS CENTER VILLAGE STREET AND TRANSIT PATHWAYS ONLY. OTHER PHASES AND ROADWAY PROJECTS (STORRS ROAD, DOG LANE, AND PHASES 1A AND 1B) MAY BE REFERENCED TO BUT ARE NOT IN CONTRACT (NIC) AND BY OTHERS.

CONSTRUCTION SCHEDULE

THE ANTICIPATED STARTING DATE OF CONSTRUCTION OF VILLAGE STREET AND TRANSIT PATHWAYS IS WINTER 2012 WITH COMPLETION ANTICIPATED AUTUMN 2012. APPROPRIATE EROSION CONTROL MEASURES AS DESCRIBED HEREIN, SHALL BE INSTALLED BY THE CONTRACTOR PRIOR TO THE COMMENCEMENT OF ALL CONSTRUCTION ACTIVITY.

CONTINGENCY EROSION PLAN

THE CONTRACTOR SHALL INSTALL ALL SPECIFIED EROSION CONTROL MEASURES AND WILL BE REQUIRED TO MAINTAIN THEM IN THEIR INTENDED FUNCTIONING CONDITION. THE AGENTS OF THE DIRECTOR OF PUBLIC WORKS, INLAND WETLANDS AGENCY AND/OR SITE ENGINEER SHALL HAVE THE AUTHORITY TO REQUIRE SUPPLEMENTAL MAINTENANCE OR ADDITIONAL MEASURES IF FIELD CONDITIONS ARE ENCOUNTERED BEYOND WHAT WOULD NORMALLY BE ANTICIPATED.

CONSTRUCTION SEQUENCE

THE CONSTRUCTION PHASING AND EROSION AND SEDIMENT CONTROL MEASURES SHOWN ON THE PLANS ARE BASED UPON ENGINEERING JUDGEMENT AND EXPERIENCE AND THE APPLICATION OF THE 2002 CONNECTICUT GUIDELINES FOR SOIL EROSION AND SEDIMENT CONTROL. THE CONTRACTOR MAY MODIFY THE CONSTRUCTION PHASING TO BEST SERVE THE ACTUAL CONSTRUCTION. HOWEVER, ANY CHANGE IN PHASING AND THE EROSION AND SEDIMENT CONTROL MEASURES TO BE USED IN THOSE PHASES, MUST BE REVIEWED AND APPROVED BEFOREHAND BY THE OWNER, ENGINEER AND/OR THE TOWN WETLAND AGENT.

THE FOLLOWING CONSTRUCTION SEQUENCE IS RECOMMENDED:

1. CONTACT TOWN OF MANSFIELD AGENT AT LEAST FORTY-EIGHT (48) HOURS PRIOR TO COMMENCEMENT OF ANY DEMOLITION, CONSTRUCTION OR REGULATED ACTIVITY ON THIS PROJECT.

2. CLEARING LIMITS SHALL BE PHYSICALLY MARKED IN THE FIELD AND APPROVED BY THE TOWN OF MANSFIELD AGENT PRIOR TO THE START OF WORK ON THE SITE. INSTALL TREE PROTECTION AND PERIMETER SILT FENCE.

3. CONSTRUCT TRACKING PADS AT ENTRANCES AND WRAP FILTER FABRIC AROUND GRATES OF CATCH BASINS OR INSTALL SILT SACKS ON CATCH BASIN INLETS ON OFF SITE ROADS. INSTALL HAY BALES AND SILT FENCE AT PERIMETER OF PROPOSED SITE DISTURBANCE AND INSTALL ALL EROSION CONTROL MEASURES AND TREE PROTECTION INDICATED ON THESE PLANS. INSTALL SEDIMENT TRAPS IF REQUIRED AT LOW AREAS OF SITE OR AS ORDERED BY THE ENGINEER OR AS SHOWN ON THESE PLANS.

4. CLEAR AND GRUB SITE. STOCKPILE CHIPS. STOCKPILE TOPSOIL. SEED TOPSOIL STOCKPILE AS NECESSARY IN ACCORDANCE WITH STANDARD PRACTICES.

5. SITE DEMOLITION AND REMOVAL. PAVEMENT REMOVAL. CUT, PLUG AND/OR REMOVE UTILITY SERVICE LATERALS PER DEMOLITION PLAN.

6. EXCAVATE UNSUITABLE MATERIALS AS REQUIRED OR AS INDICATED ON PLAN. BEING DOUBLEWAL CONSTRUCTION. BEGIN CONSTRUCTION OF STORMWATER OUTFALL LOCATIONS AND INSTALL EROSION CONTROLS PER PLAN.

7. BEGIN EARTHWORK. CUT EMBANKMENTS AND CONSTRUCT FILL SLOPE, BACKFILL RETAINING WALL.

8. INSTALL STORM DRAINAGE STORMTRAP UNITS AND UTILITIES BEHIND RETAINING WALL AS BACKFILL IS INSTALLED.

9. INSTALL SILT FENCE, CONSTRUCT SWALES AND INSTALL STORM DRAINAGE, TEMPORARILY BLOCK DETENTION SYSTEM OUTLETS AS NECESSARY.

10. ROUGH GRADING AND FILLING TO SUBGRADES AND SLOPES. INSTALL NEW UTILITY MAINS AND SERVICES.

11. CONTINUE EARTHWORK. INSTALL ADDITIONAL EROSION CONTROLS AND CONSTRUCT STORM DRAINAGE, UTILITIES, TOPSOIL AND SEED SLOPES WHICH HAVE ACHIEVED FINAL SITE GRADING.

12. CONSTRUCT CURBS AND INSTALL SIDEWALK AND PAVEMENT BASE MATERIAL AT VILLAGE STREET AND TRANSIT PATHWAYS.

13. INSTALLATION OF SITE LIGHTING BASES AND CONDUIT.

14. REMOVE SEDIMENT FROM BEHIND SILT FENCES AND HAY BALES, AND FROM SEDIMENTATION TRAPS AS REQUIRED. REMOVAL SHALL BE ON A PERIODIC BASIS (EVERY SIGNIFICANT RAINFALL). INSPECTION OF EROSION CONTROL MEASURES SHALL BE ON A DAILY BASIS. SEDIMENT COLLECTED SHALL BE DEPOSITED AND SPREAD EVENLY UPLAND ON SLOPES DURING CONSTRUCTION.

15. COMPLETE STORM SEWERS AND UTILITY SERVICES. INSTALL CONCRETE SIDEWALKS.

16. INSTALL EXTERIOR LIGHTING.

17. FINISH GRADING.

18. FINAL GRADING OF SLOPE AREAS. INSTALL BINDER COURSE OF BITUMINOUIS PAVEMENT.

19. PLACE 4" TOPSOIL ON SLOPES AFTER FINAL GRADING IS COMPLETED. FERTILIZE SEED AND MULCH. SEED MIXTURE TO BE INSTALLED APRIL 11, 2011- JUNE 1 OR AUGUST 15-OCTOBER 1 USE EROSION CONTROL BLANKETS AS REQUIRED OR ORDERED FOR SLOPES GREATER THAN 3:1. FOR TEMPORARY STABILIZATION BEYOND SEEDING DATES USE ANNUAL RYE AT 4.0 LBS/1,000 S.F. FERTILIZE WITH 10-10-10 AT 1.0 LBS. OF NITROGEN PER 1,000 S.F. AND LIME AT 100 LBS/1,000 S.F. (MAX.).

20. LANDSCAPE PERIMETER AREAS.

21, INSTALL DECORATIVE BITUMINOUS PAVEMENT AND CROSSWALKS.

22. INSTALL SIGNING AND PAVEMENT MARKINGS.

23. CLEAN STORM DRAINAGE PIPE STRUCTURES, DETENTION SYSTEMS, AND WATER QUALITY DEVICES OF DEBRIS AND SEDIMENT.

24. DURING CONSTRUCTION, THE CONSTRUCTION MANAGER SHALL SUBMIT TO THE TOWN OF MANSFIELD ZONING AGENT BI-WEEKLY EROSION AND SEDIMENT CONTROL MONITORING REPORTS UNTIL DISTURBED AREAS ARE STABILIZED. UPON DIRECTION OF THE TOWN OF MANSFIELD AGENT, EROSION AND SEDIMENT CONTROL MEASURES SHALL BE REMOVED FOLLOWING STABILIZATION OF THE SITE.

25. REMOVE PLUGS FROM DETENTION SYSTEM OUTLETS.

OPERATION AND MAINTENANCE OF SEDIMENTATION AND EROSION CONTROL MEASURES

I. SILTATION FENCE

A. ALL SILTATION FENCES SHALL BE INSPECTED AT A MINIMUM DAILY OR AFTER EACH RAINFALL. ALL DETERIORATED FABRIC AND DAMAGED POSTS SHALL BE REPLACED AND PROPERLY REPOSITIONED IN ACCORDANCE WITH THIS PLAN.

B. SEDIMENT DEPOSITS SHALL BE REMOVED FROM BEHIND THE FENCE WHEN THEY EXCEED A HEIGHT OF ONE FOOT.

II. HAY BALES

A. ALL HAY BALE RINGS SHALL BE INSPECTED FOLLOWING DAILY AND AFTER EACH RAINFALL. REPAIR OR REPLACEMENT SHALL BE PROMPTLY MADE AS NEEDED.

B. DEPOSITS SHALL BE REMOVED AND CLEANED-OUT IF ONE HALF OF THE ORIGINAL HEIGHT OF THE BALES BECOMES FILLED WITH SEDIMENT.

III. SEDIMENT BASINS

A. CONTRACTOR TO KEEP DAILY CHECKLIST LOGS FOR INSPECTIONS OF ALL SEDIMENT AND EROSION CONTROL DEVICES AND HAVE THEM READILY AVAILABLE ON-SITE AT ALL TIMES FOR INSPECTION BY DEP, LOCAL AUTHORITIES OR ENGINEER.

B. ALL SEDIMENT BASINS AND/OR SEDIMENT TRAPS SHALL BE INSPECTED FOLLOWING EACH RAINFALL. REPAIR OF SLOPES SHALL BE PROMPTLY MADE AS NEEDED.

C. SEDIMENT DEPOSITS SHALL BE REMOVED FROM SEDIMENT BASINS AND/OR SEDIMENT TRAPS WHEN THEY EXCEED A HEIGHT OF ONE FOOT UNLESS OTHERWISE INDICATED ON THE EROSION CONTROL PLANS AND DETAILS TO BE AT SPECIFIC ELEVATION PER CLEANOUT MARKERS.

D. SEDIMENT SHALL BE DISPOSED OF ON-SITE OR AS DIRECTED BY THE ENGINEER AND LOCAL GOVERNING OFFICIALS.

EROSION AND SEDIMENT CONTROL PLAN

1. HAY BALE FILTERS OR SILTATION FENCE WILL BE INSTALLED AT ALL CULVERT OUTLETS AND ALONG THE TOE OF ALL CRITICAL CUT AND FILL SLOPES.

2. CULVERT DISCHARGE AREAS WILL BE PROTECTED WITH RIP RAP CHANNELS; ENERGY DISSIPATERS WILL BE INSTALLED AS SHOWN ON THESE PLANS AS NECESSARY.

3. CATCH BASINS WILL BE PROTECTED WITH SILT SACKS OR HAY BALE FILTERS PER EROSION CONTROL PLANS THROUGHOUT THE CONSTRUCTION PERIOD AND UNTIL ALL DISTURBED AREAS ARE THOROUGHLY STABILIZED.

4. ALL EROSION AND SEDIMENT CONTROL MEASURES WILL BE INSTALLED IN ACCORDANCE WITH THE STANDARDS AND SPECIFICATIONS OF THE CONNECTICUT GUIDELINES FOR SOIL EROSION AND SEDIMENT CONTROL, LATEST EDITION.

5. EROSION AND SEDIMENT CONTROL MEASURES WILL BE INSTALLED PRIOR TO DEMOLITION AND/OR CONSTRUCTION.

6. ALL CONTROL MEASURES WILL BE MAINTAINED IN EFFECTIVE CONDITION THROUGHOUT THE DEMOLITION AND CONSTRUCTION PERIOD.

7. ADDITIONAL CONTROL MEASURES WILL BE INSTALLED DURING THE CONSTRUCTION PERIOD, IF NECESSARY OR AS DIRECTED BY THE CIVIL ENGINEER OR LOCAL GOVERNING OFFICIALS.

8. SEDIMENT REMOVED FROM CONTROL STRUCTURES WILL BE DISPOSED IN A MANNER WHICH IS CONSISTENT WITH THE INTENT AND REQUIREMENTS OF THE EROSION CONTROL PLANS, NOTES AND DETAILS.

9. THE CONTRACTOR IS ASSIGNED THE RESPONSIBILITY FOR IMPLEMENTING THIS EROSION AND SEDIMENT CONTROL PLAN. THIS RESPONSIBILITY INCLUDES THE INSTALLATION AND MAINTENANCE OF CONTROL MEASURES, INFORMING ALL PARTIES ENGAGED ON THE CONSTRUCTION SITE OF THE REQUIREMENTS AND OBJECTIVES OF THE PLAN, NOTIFICATION OF THE TOWN OF MANSFIELD PLANNING AND ZONING COMMISSION OFFICE OR GOVERNING AUTHORITY OF ANY TRANSFER OF THIS RESPONSIBILITY AND FOR CONVEYING A COPY OF THE EROSION AND SEDIMENT CONTROL PLAN IF THE TITLE TO THE LAND IS TRANSFERRED.

EROSION AND SEDIMENT CONTROL PLAN SEDIMENT AND EROSION CONTROL NOTES

1. THE EROSION AND SEDIMENT CONTROL PLAN IS ONLY INTENDED TO DESCRIBE THE SEDIMENT AND EROSION CONTROL TREATMENT FOR THIS SITE. SEE SEDIMENT AND EROSION CONTROL DETAILS AND CONSTRUCTION SEQUENCE. REFER TO SITE PLAN FOR GENERAL INFORMATION AND OTHER PLANS FOR APPROPRIATE INFORMATION.

2. THE CONTRACTOR IS RESPONSIBLE FOR IMPLEMENTING THIS SEDIMENT AND EROSION CONTROL PLAN. THIS RESPONSIBILITY INCLUDES THE PROPER INSTALLATION AND MAINTENANCE OF CONTROL MEASURES, INFORMING ALL PARTIES ENGAGED WITH CONSTRUCTION ON THE SITE OF THE REQUIREMENTS AND OBJECTIVES OF THIS PLAN, INFORMING THE GOVERNING AUTHORITY OR INLAND WETLANDS AGENCY OF ANY TRANSFER OF THIS RESPONSIBILITY, AND FOR CONVEYING A COPY OF THE SEDIMENT & EROSION CONTROL PLAN IF THE TITLE TO THE LAND IS TRANSFERRED.

3. AN EROSION CONTROL BOND MAY BE REQUIRED TO BE POSTED WITH THE TOWN OF MANSFIELD TO ENSURE IMPLEMENTATION OF THE EROSION CONTROL MEASURES. THE CONTRACTOR SHALL BE RESPONSIBLE FOR THE POSTING OF THIS BOND AND FOR INQUIRIES TO THE TOWN OF MANSFIELD FOR INFORMATION ON THE METHOD, TYPE AND AMOUNT OF THE BOND POSTING UNLESS OTHERWISE DIRECTED BY THE OWNER.

4. THE CONTRACTOR SHALL CONSTRUCT ALL SEDIMENT AND EROSION CONTROLS IN ACCORDANCE WITH THE CONNECTICUT GUIDELINES FOR SOIL EROSION AND SEDIMENT CONTROL, LATEST EDITION IN ACCORDANCE WITH THE CONTRACT DOCUMENTS, AND AS DIRECTED BY THE TOWN OF MANSFIELD. THE CONTRACTOR SHALL KEEP A COPY OF THE GUIDELINES ON-SITE FOR REFERENCE DURING CONSTRUCTION.

5. ADDITIONAL AND/OR ALTERNATIVE SEDIMENT AND EROSION CONTROL MEASURES MAY BE INSTALLED DURING THE CONSTRUCTION PERIOD IF FOUND NECESSARY BY THE CONTRACTOR, OWNER, SOILS ENGINEER, TOWN OFFICIALS, OR ANY GOVERNING AGENCY. THE CONTRACTOR SHALL CONTACT THE OWNER AND APPROPRIATE GOVERNING AGENCIES FOR APPROVAL IF ALTERNATIVE CONTROLS OTHER THAN THOSE SHOWN ON THE PLANS ARE PROPOSED.

6. THE CONTRACTOR SHALL INSPECT ALL SEDIMENT AND EROSION CONTROLS BEFORE AND AFTER EACH STORM (0.25 INCHES OR GREATER RAINFALL OR AT MINIMUM WEEKLY), TO VERIFY THAT THE CONTROLS ARE OPERATING PROPERLY AND MAKE REPAIRS WHERE NECESSARY. A WRITTEN REPORT OF EACH INSPECTION SHALL BE KEPT AND INCLUDE: A) A SUMMARY OF THE SITE CONDITIONS, E&S, AND COMPLIANCE; AND B) THE DATE, TIME AND THE NAME OF THE PERSON CONDUCTING THE INSPECTION.

7. THE CONTRACTOR SHALL KEEP A SUPPLY OF EROSION CONTROL MATERIAL (HAY BALES, SILT FENCE, JUTE MESH, RIP RAP, ETC.) ON-SITE FOR MAINTENANCE AND EMERGENCY REPAIRS.

8. PROTECT EXISTING TREES THAT ARE TO BE SAVED BY FENCING AT THE DRIP LINE OR AS SHOWN WITH SNOW FENCE, ORANGE SAFETY FENCE, OR EQUIVALENT FENCING. ANY LIMB TRIMMING SHOULD BE DONE BEFORE CONSTRUCTION BEGINS IN THAT AREA; FENCING SHALL BE MAINTAINED AND REPAIRED DURING CONSTRUCTION.

9. INSTALL PERIMETER SEDIMENT CONTROLS PRIOR TO CLEARING OR CONSTRUCTION. ALL CONSTRUCTION SHALL BE CONTAINED WITHIN THE LIMIT OF DISTURBANCE, WHICH SHALL BE MARKED WITH SILT FENCE, SAFETY FENCE, HAY BALES, RIBBONS, OR OTHER MEANS PRIOR TO CLEARING. CONSTRUCTION ACTIVITY SHALL REMAIN ON THE UPHILL SIDE OF THE SILT FENCE UNLESS WORK IS SPECIFICALLY CALLED FOR ON THE DOWNHILL SIDE OF THE FENCE.

10. STONE CONSTRUCTION ENTRANCE ANTI-TRACKING PADS SHALL BE INSTALLED AT START OF CONSTRUCTION AND MAINTAINED THROUGHOUT THE DURATION OF CONSTRUCTION. THE LOCATION OF THE TRACKING PADS MAY CHANGE AS VARIOUS PHASES OF CONSTRUCTION ARE COMPLETED.

11. TOPSOIL SHALL BE STRIPPED AND STOCKPILED FOR USE IN FINAL LANDSCAPING. ALL EARTH STOCKPILES SHALL HAVE HAY BALES OR SILT FENCE AROUND THE LIMIT OF PILE. PILES SHALL BE TEMPORARILY SEEDED IF PILE IS TO REMAIN IN PLACE FOR MORE THAN 2 MONTHS.

12. SEDIMENTATION TRAPS SHALL PROVIDE 134 CUBIC YARDS OF SEDIMENT STORAGE PER DISTURBED ACRE CONTRIBUTING TO THE BASIN. PROVIDE BASIN VOLUMES FOR ALL DISTURBANCE ON SITE.

13. COMPLY WITH REQUIREMENTS OF CGS SECTION 22A, 430B FOR STORMWATER DISCHARGE FROM CONSTRUCTION ACTIVITIES AND WITH DEP RECORD KEEPING AND INSPECTION REQUIREMENTS.

14. MINIMIZE LAND DISTURBANCES. SEED AND MULCH DISTURBED AREAS WITH TEMPORARY MIX AS SOON AS PRACTICABLE (2 WEEK MAXIMUM UNSTABILIZED PERIOD) USING PERENNIAL RYEGRASS AT 40 LBS PER ACRE. MULCH ALL CUT AND FILL SLOPES AND SWALES WITH LOOSE HAY AT A RATE OF 2 TONS PER ACRE. IF NECESSARY, REPLACE LOOSE HAY ON SLOPES WITH EROSION CONTROL BLANKETS OR JUTE CLOTH. MODERATELY GRADED AREAS, ISLANDS, AND TEMPORARY CONSTRUCTION STAGING AREAS MAY BE HYDROSEEDED WITH TACKIFIER.

15. MAINTAIN EXISTING PAVED AREAS FOR CONSTRUCTION STAGING FOR AS LONG AS POSSIBLE.

16. SILT FENCE AND OTHER SEDIMENT CONTROL MEASURES SHALL BE INSTALLED IN ACCORDANCE WITH DRAWINGS AND MANUFACTURER'S RECOMMENDATIONS PRIOR TO WORK IN ANY UPLAND AREAS.

17. EXCAVATED MATERIAL FROM TEMPORARY SILT TRAPS MUST BE STOCKPILED ON UPHILL SIDE OF SILT FENCE.

18. INSTALL SILT FENCE ACCORDING TO MANUFACTURER'S INSTRUCTION, PARTICULARLY, BURY LOWER EDGE OF FABRIC INTO GROUND. SILT FENCE SHALL BE MIRAFI ENVIROFENCE, AMOCO SILT STOP OR EQUIVALENT APPROVED BY SITE ENGINEER. FILTER FABRIC USED SHALL BE MIRAFI 100X OR EQUIVALENT. SEE SPECIFICATIONS FOR ADDITIONAL INFORMATION.

19. USE NEW HAY BALES AND REPLACE THEM WHENEVER THEIR CONDITION DETERIORATES BEYOND REASONABLE USABILITY. STAKE HAY BALES SECURELY INTO GROUND AND BUTT TIGHTLY TOGETHER TO PREVENT UNDERCUTTING AND BYPASSING.

20. INSTALL TEMPORARY DIVERSION DITCHES, PLUNGE POOLS, SEDIMENT TRAPS AND DEWATERING PITS AS SHOWN AND AS NECESSARY DURING VARIOUS PHASES OF CONSTRUCTION TO CONTROL RUNOFF UNTIL UPHILL AREAS ARE STABILIZED. LOCATION OF TEMPORARY SEDIMENT BASINS WILL REQUIRE REVIEW AND APPROVAL BY THE CIVIL ENGINEER AND GOVERNING OFFICIAL.

21. DIRECT ALL DEWATERING PUMP DISCHARGE TO A SEDIMENT CONTROL DEVICE SUCH AS TEMPORARY PITS, SEDIMENT TRAPS OR GRASS FILTERS WITHIN THE APPROVED LIMIT OF DISTURBANCE. DISCHARGE TO STORM SEWERS OR SURFACE WATERS FROM SEDIMENT CONTROLS SHALL BE CLEAR. ALL EROSION AND SEDIMENT CONTROL MEASURES WILL BE INSTALLED IN ACCORDANCE WITH THE STANDARDS AND SPECIFICATIONS OF THE CONNECTICUT GUIDELINES FOR SOIL EROSION AND SEDIMENT CONTROL, LATEST EDITION.

22. BLOCK THE OPEN UPSTREAM ENDS OF DETENTION BASIN/SEDIMENTATION BASIN OUTLET CONTROL ORIFICE UNTIL SITE IS STABILIZED AND BLOCK END OF STORM SEWERS IN EXPOSED TRENCHES WITH BOARDS AND SANDBAGS AT THE END OF EACH WORKING DAY.

23. SWEEP AFFECTED PORTIONS OF OFF SITE ROADS ONE OR MORE TIMES A DAY (OR LESS FREQUENTLY IF TRACKING IS NOT A PROBLEM) DURING CONSTRUCTION. OTHER DUST CONTROL MEASURES TO BE USED AS NECESSARY INCLUDES WATERING DOWN DISTURBED AREAS, USING CALCIUM CHLORIDE, AND COVERING LOADS ON DUMP TRUCKS.

24. PERIODICALLY CHECK ACCUMULATED SEDIMENT LEVELS IN SEDIMENT TRAPS DURING CONSTRUCTION AND CLEAN ACCUMULATED SILT WHEN NECESSARY OR WHEN ONE FOOT OF SEDIMENT HAS ACCUMULATED OR PER SPECIFIC CLEANOUT MARKER ELEVATION. CLEAN ACCUMULATED SEDIMENT FROM CATCH BASIN SUMPS AS NECESSARY AND AS DIRECTED BY THE CIVIL ENGINEER OR OWNERS CONSTRUCTION REPRESENTATIVE. REMOVE ACCUMULATED SEDIMENT FROM BEHIND HAY BALES AND SILT FENCE WHEN LEVEL REACHES HALF THE HEIGHT OF THE HAY BALE OR ONE FOOT AT SILT FENCE. DISPOSE OF SEDIMENT LEGALLY ON SITE.

25. IMMEDIATELY UPON DISCOVERING UNFORESEEN CIRCUMSTANCES POSING THE POTENTIAL FOR ACCELERATED EROSION AND/OR SEDIMENT POLLUTION, THE CONTRACTOR SHALL IMPLEMENT APPROPRIATE BEST MANAGEMENT PRACTICES TO ELIMINATE THE POTENTIAL FOR ACCELERATED EROSION AND/OR SEDIMENT POLLUTION.

26. ALL PUMPING OF SEDIMENT LADEN WATER SHALL BE THROUGH A SEDIMENT CONTROL BEST MANAGEMENT PRACTICE SUCH AS A PUMPED WATER FILTER BAG OR EQUIVALENT SEDIMENT REMOVAL FACILITY OVER UNDISTURBED VEGETATED AREAS.

27. ALL EXCAVATED MATERIAL SHALL BE PLACED ON THE HIGH SIDE OF UTILITY AND STORM PIPE TRENCHES SO AS TO ALLOW THE TRENCH TO INTERCEPT ALL SILT LADEN RUNOFF.

28. CONTRACTOR SHALL ONLY EXCAVATE AS MUCH UTILITY AND STORM PIPE TRENCH WORK AS CAN BE COMPLETED, BACKFILLED AND STABILIZED IN ONE DAY SO AS TO LIMIT THE AMOUNT OF OPEN DISTURBED TRENCHING.

29. AN AREA SHALL BE CONSIDERED TO HAVE ACHIEVED FINAL STABILIZATION WHEN IT HAS A MINIMUM OF 70% UNIFORM PERENNIAL VEGETATIVE COVER OR OTHER PERMANENT NON-VEGETATIVE COVER WITH DENSITY SUFFICIENT TO RESIST ACCELERATED SURFACE EROSION AND SUBSURFACE CHARACTERISTICS SUFFICIENT TO RESIST SLIDING OR OTHER MOVEMENTS.

30. MAINTAIN ALL PERMANENT AND TEMPORARY SEDIMENT CONTROL DEVICES IN EFFECTIVE CONDITION THROUGHOUT THE CONSTRUCTION PERIOD. UPON COMPLETION OF WORK SWEEP PARKING LOT AND PAVEMENTS AND REMOVE ALL TEMPORARY SEDIMENT CONTROLS WHEN AUTHORIZED BY LOCAL GOVERNING AUTHORITY.

SEQUENCE OF OPERATIONS

OPERATION I – CLEARING AND GRUBBING

1. ALL SEDIMENTATION AND EROSION CONTROL MEASURES, INCLUDING THE CONSTRUCTION OF THE TEMPORARY SEDIMENT TRAPS AND/OR SEDIMENTATION BASINS AND ANTI-TRACKING PADS, WILL BE INSTALLED PRIOR TO THE START OF CLEARING AND GRUBBING AND DEMOLITION OPERATIONS.

2. FOLLOWING INSTALLATION OF ALL SEDIMENTATION AND EROSION CONTROL MEASURES, THE CONTRACTOR SHALL NOT PROCEED WITH OPERATION II UNTIL THE ENGINEER HAS INSPECTED AND APPROVED ALL INSTALLATIONS.

3. THE CONTRACTOR SHALL TAKE EXTREME CARE DURING OPERATION I SO AS NOT TO DISTURB UNPROTECTED WETLAND AREAS OR SEDIMENTATION AND EROSION CONTROL STRUCTURES.

4. FOLLOWING THE COMPLETION OF OPERATION I, ALL AREAS SHALL BE STABILIZED WITH TOPSOIL AND SEEDING OR PROCESSED AGGREGATE AS SOON AS PRACTICAL.

OPERATION II – ROUGH GRADING

1. DURING THE REMOVAL AND/OR PLACEMENT OF EARTH AS INDICATED ON THE SITE PLAN, TOPSOIL SHALL BE STRIPPED AND APPROPRIATELY STOCKPILED FOR REUSE.

2. ALL STOCKPILED TOPSOIL SHALL BE SEEDED, MULCHED WITH HAY, AND ENCLOSED BY A SILTATION FENCE.

OPERATION III – FILLING

1. PRIOR TO FILLING, ALL SEDIMENTATION AND EROSION CONTROL STRUCTURES SHALL BE PROPERLY IMPLEMENTED, MAINTAINED AND FULLY INSTALLED, AS DIRECTED BY THE ENGINEER AND AS SHOWN ON THIS PLAN.

2. ALL FILL MATERIAL ADJACENT TO ANY WETLAND AREAS SHALL BE GOOD QUALITY, WITH LESS THAN 5% FINES PASSING THROUGH A #200 SIEVE (BANK RUN), SHALL BE PLACED IN MAXIMUM ONE FOOT LIFTS, AND SHALL BE COMPACTED TO 95% MAX. DRY DENSITY MODIFIED PROCTOR OR AS SPECIFIED IN CONTRACT SPECIFICATIONS.

3. AS GENERAL GRADING OPERATIONS PROGRESS, THE TEMPORARY DIVERSION DITCHES SHALL BE RAISED OR LOWERED, AS NECESSARY, TO DIVERT SURFACE RUNOFF TO SEDIMENT TRAPS.

OPERATION IV – PLACEMENT OF DRAINAGE STRUCTURES, UTILITIES, AND BUILDING CONSTRUCTION.

1. STAKED HAY BALES OR SILT FENCES SHALL BE INSTALLED AT THE DOWNHILL SIDES OF BUILDING EXCAVATIONS, MUD PUMP DISCHARGES, AND UTILITY TRENCH MATERIAL STOCKPILES.

OPERATION V – FINAL GRADING AND PAVING

1. ALL INLET AND OUTLET PROTECTION SHALL BE PLACED AND MAINTAINED AS DISCUSSED IN OPERATION IV AND AS SHOWN ON EROSION CONTROL PLANS AND DETAILS AND AS DESCRIBED IN SPECIFICATIONS AND AS DESCRIBED HEREIN.

2. NO CUT OR FILL SLOPES SHALL EXCEED 2:1 EXCEPT WHERE STABILIZED BY ROCK FACED EMBANKMENTS OR EROSION CONTROL BLANKETS, JUTE MESH AND VEGETATION. ALL SLOPES SHALL BE SEEDED, AND THE ROAD OR DRIVEWAY SHOULDER AND BANKS WILL BE STABILIZED IMMEDIATELY UPON COMPLETION OF FINAL GRADING UNTIL TURF IS ESTABLISHED.

3. PAVEMENT SUBBASE AND BASE COURSES SHALL BE INSTALLED OVER AREAS TO BE PAVED AS SOON AS FINAL SUB-GRADES ARE ESTABLISHED AND UNDERGROUND UTILITIES AND STORM DRAINAGE SYSTEMS HAVE BEEN INSTALLED.

4. CONSTRUCT PAVEMENT, PLACE TOPSOIL, FINAL SEED, MULCH AND LANDSCAPING.

5. REMOVE ALL TEMPORARY EROSION CONTROL DEVICES ONLY AFTER ALL AREAS HAVE BEEN PAVED AND/OR GRASS HAS BEEN WELL ESTABLISHED AND THE SITE HAS BEEN INSPECTED AND APPROVED BY THE TOWN OR GOVERNING WETLAND AGENCY.

SEQUENCE FOR INSTALLATION OF SOIL EROSION & SEDIMENTATION CONTROL MEASURES

PHASE 1

1 ERECT SILTATION FENCES, SEDIMENT TRAP, DIVERSION DITCHES, AND ANTI-TRACKING PAD.

2. STRIP TOPSOIL AND STOCKPILE.

3. PERFORM CLEARING AND GRUBBING ACTIVITIES, AND DEMOLITION.

4. STABILIZE STOCK PILE.

PHASE 2

1. INSPECT AND MAINTAIN SEDIMENTATION AND EROSION CONTROL STRUCTURES.

2. ROUGH GRADING AND CONSTRUCTION OF SEDIMENT TRAPS.

PHASE 3

1. INSPECT AND MAINTAIN SEDIMENTATION AND EROSION CONTROL STRUCTURES.

2. PERFORM FILLING ACTIVITIES.

PHASE 4

1. INSPECT AND MAINTAIN SEDIMENTATION AND EROSION CONTROL STRUCTURES.

2. CONSTRUCT DRAINAGE STRUCTURES. CONSTRUCT SEDIMENTATION TRAPS. LEAVE TOPS OFF INLET C.B.'S TO COLLECT FLOW. LEAVE OUTLET CONTROL ORIFICES CLOSED AT DETENTION SYSTEM OUTLET CONTROL STRUCTURE

3. INSTALL HAY BALES.

PHASE 5

1. INSPECT AND MAINTAIN SEDIMENTATION AND EROSION CONTROL STRUCTURES.

2. PERFORM FINAL GRADING AND PAVING.

PHASE 6

1. INSPECT AND MAINTAIN SEDIMENTATION AND EROSION CONTROL STRUCTURES.

2. RESPREAD TOPSOIL.

3. LIME, FERTILIZE, AND SEED.

4. MULCH.

5. FINAL COVER.

PHASE 7

1. MAINTAIN SILTATION FENCES UNTIL COVER IS COMPLETELY STABILIZED.

2. PERFORM FINAL INSPECTION.

3. REMOVE SILTATION FENCES, CLEAN, AND RESTORE ALL AREAS.

4. CLEAN ALL DEBRIS FROM DETENTION SYSTEMS.

INSTALLATION OF SEDIMENTATION AND EROSION CONTROL MEASURES

I. SILTATION FENCE

A. DIG A SIX INCH TRENCH ON THE UPHILL SIDE OF THE DESIGNATED FENCE LINE LOCATION.

B. POSITION THE POST AT THE BACK OF THE TRENCH (DOWNHILL SIDE), AND HAMMER THE POST AT LEAST 1.5 FEET INTO THE GROUND.

C. LAY THE BOTTOM SIX INCHES OF THE FABRIC INTO THE TRENCH TO PREVENT UNDERMINING BY STORM WATER RUN-OFF.

D. BACKFILL THE TRENCH AND COMPACT.

II. HAY BALES

A. BALES SHALL BE PLACED IN A SINGLE ROW, LENGTHWISE, ORIENTED PARALLEL TO THE CONTOUR, WITH ENDS OF ADJACENT BALES TIGHTLY ABUTTING ONE ANOTHER.

B. BALES SHALL BE ENTRENCHED AND BACKFILLED. A TRENCH SHALL BE EXCAVATED THE WIDTH OF A BALE AND THE LENGTH OF THE PROPOSED BARRIER TO A MINIMUM DEPTH OF FOUR INCHES. AFTER THE BALES ARE STAKED, THE EXCAVATED SOIL SHALL BE BACKFILLED AGAINST THE BARRIER.

C. EACH BALE SHALL BE SECURELY ANCHORED BY AT LEAST TWO (2) STAKES.

D. THE GAPS BETWEEN BALES SHALL BE WEDGED WITH STRAW TO PREVENT WATER LEAKAGE.

E. THE BARRIER SHALL BE EXTENDED TO SUCH A LENGTH THAT THE BOTTOMS OF THE END BALES ARE HIGHER IN ELEVATION THAN THE TOP OF THE LOWEST MIDDLE BALE, TO ENSURE THAT RUN-OFF WILL FLOW EITHER THROUGH OR OVER THE BARRIER, BUT NOT AROUND IT.

III. SEDIMENT TRAPS

A. CONTRACTOR TO KEEP WEEKLY CHECKLIST LOGS FOR INSPECTIONS OF ALL SEDIMENT AND EROSION CONTROL DEVICES AND HAVE THEM READILY AVAILABLE ON SITE AT ALL TIMES FOR INSPECTION BY CT DEP, LOCAL AUTHORITIES OR ENGINEER.

B. ALL SEDIMENT TRAPS SHALL BE INSPECTED FOLLOWING EACH RAINFALL. REPAIR OF SLOPES SHALL BE PROMPTLY MADE AS NEEDED.

C. SEDIMENT DEPOSITS SHALL BE REMOVED FROM SEDIMENT TRAPS WHEN THEY EXCEED A HEIGHT OF ONE FOOT UNLESS OTHERWISE INDICATED ON THE EROSION CONTROL PLANS AND DETAILS TO BE AT A SPECIFIC ELEVATION PER CLEAN OUT MARKERS.

D. SEDIMENT SHALL BE DISPOSED OF ONSITE OR AS DIRECTED BY THE ENGINEER AND LOCAL GOVERNING OFFICIALS. SEE SEDIMENT AND EROSION CONTROL NOTES HEREIN REGARDING DISPOSAL REQUIREMENTS FOR OFFSITE SPOIL DISPOSAL

FOR PERMITTING PURPOSES ONLY
NOT RELEASED FOR CONSTRUCTION

BL Companies
ARCHITECTURE
ENGINEERING
PLANNING
LANDSCAPE ARCHITECTURE
LAND SURVEYING
ENVIRONMENTAL SCIENCES

355 Research Parkway
Meriden, CT 06450
(203) 630-1406
(203) 630-2615 Fax

VILLAGE STREET AND TRANSIT PATHWAYS
VILLAGE STREET
MANSFIELD, CONNECTICUT

REVISIONS		
No.	Date	Desc.

Designed	J.I.G.
Drawn	E.L.Z. / J.I.G.
Checked	
Approved	
Scale	1"=20'
Project No.	10C3550
Date	8/15/11
CAD File	TEC10C355001

Title
SEDIMENTATION AND EROSION CONTROL PLAN

Sheet No.
EC-4

Xref (s): ; XR03C66700 ; XR03C66701 ; XY03c066701 ; XR08C3079B01 ; XC03C667Q01 ; XR08C3079B02 ; XR10C355001 ; BD10C355001 ; XR10C355002 ; XR10C355003

Sep 15, 2011 1:36pm EZelazny K:\Jobs03\03c667\dwg\TEC10C355001.dwg
Layout: EC-4 24X36

THESE DRAWINGS SHALL NOT BE UTILIZED BY ANY PERSON, FIRM OR CORPORATION WITHOUT THE SPECIFIC WRITTEN PERMISSION OF BL COMPANIES

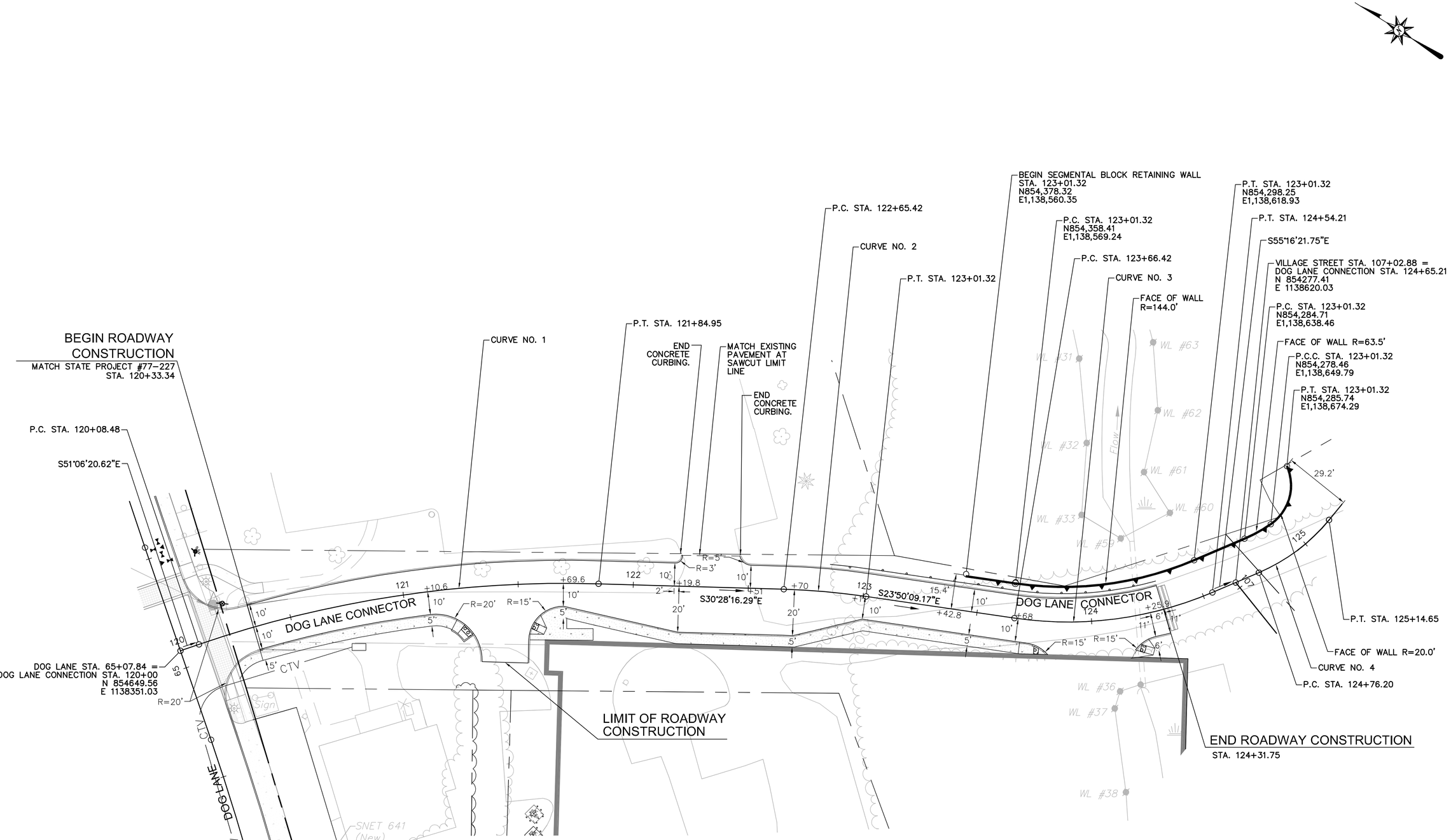

DOG LANE CONNECTOR CURVE DATA

CURVE NO. 1		
DESCRIPTION	NORTHING	EASTING
PC	854644.23	1138357.63
PI	854588.23	1138427.06
PT	854511.34	1138472.29
△ = 20°38'04" RT	T = 89.20'	
R = 490.00'	L = 176.47'	

CURVE NO. 2		
DESCRIPTION	NORTHING	EASTING
PC	854441.99	1138513.10
PI	854426.50	1138522.22
PT	854410.06	1138529.48
△ = 06°38'07" RT	T = 17.97'	
R = 310.00'	L = 35.90'	

CURVE NO. 3		
DESCRIPTION	NORTHING	EASTING
PC	854350.52	1138555.78
PI	854309.33	1138573.98
PT	854283.68	1138610.99
△ = 31°26'13" LT	T = 45.03'	
R = 160.00'	L = 87.79'	

CURVE NO. 4		
DESCRIPTION	NORTHING	EASTING
PC	854271.15	1138629.06
PI	854259.98	1138645.17
PT	854257.53	1138664.63
△ = 27°32'22" LT	T = 19.61'	
R = 80.00'	L = 38.45'	

GRAPHIC SCALE
20 10 0 20
SCALE IN FEET

FOR PERMITTING PURPOSES ONLY
NOT RELEASED FOR CONSTRUCTION

BL Companies
ARCHITECTURE
ENGINEERING
PLANNING
LANDSCAPE ARCHITECTURE
LAND SURVEYING
ENVIRONMENTAL SCIENCES

355 Research Parkway
Meriden, CT 06450
(203) 630-1406
(203) 630-2615 Fax

DOG LANE CONNECTOR
STORRS CENTER
MANSFIELD, CONNECTICUT

REVISIONS
No. Date Desc.

Designed	J.I.G.
Drawn	E.L.Z. / J.I.G.
Checked	
Approved	
Scale	1"=20'
Project No.	10C3350B
Date	9/15/11
CAD File	THZL10C3550B01

Title
HORIZONTAL LAYOUT PLAN

Sheet No.
HZL-1

Sep 15, 2011 1:40pm EZlazny K:\obs03\03s667\dwg\THZL10C3550B01.dwg
Layout: HZL-1 24X36 20sc

Xref (s): ; XR03C667002 ; XR03C667001 ; XY03C667001 ; XR10C3079B01 ; XC03C667001 ; XR08C3079B02 ; XR10C3550001 ; IBD10C3550B01 ; XR10C3550001B

THESE DRAWINGS SHALL NOT BE UTILIZED BY ANY PERSON, FIRM OR CORPORATION WITHOUT THE SPECIFIC WRITTEN PERMISSION OF BL COMPANIES

BEGIN ROADWAY CONSTRUCTION
MATCH STATE PROJECT #77-227
STA. 120+33.34

END CONCRETE CURB

CONCRETE SIDEWALK BY OTHERS

SEE GRADING AND DRAINAGE PLAN FOR APPROX. SLOPE LIMITS

PROVIDE AND INSTALL 5" WIDE CONCRETE CURBING (5.5" REVEAL – TOP OF BINDER TO TOP OF CURB)

PROVIDE AND INSTALL 4" TOPSOIL & TURF ESTABLISHMENT (TYP.)

LIMIT OF CONSTRUCTION LINE (TYP)

LIMITS OF TREE CLEARING (TYP.)

BEGIN MERRITT PARKWAY TYPE GUIDERAIL AND TYPE I END ANCHORAGE

END 5" WIDE CONC. CURB (5.5" REVEAL – TOP OF BINDER TO TOP OF CURB)

MATCH EXISTING BINDER COURSE PAVEMENT INSTALLATION AT SAWCUT LINE. INSTALL TEMPORARY 12" WIDE BITUMINOUS CONCRETE RAMP TO MATCH WEARING COURSE.

END 5" WIDE CONC. CURB (5.5" REVEAL – TOP OF BINDER TO TOP OF CURB)

N/F
HELLENIC SOCIETY
"PAIDEIA" INC.

DOG LANE CONNECTOR

DOG LANE

CTV

Sign

END CONCRETE CURB

MATCH 5-FT WIDE CONCRETE SIDEWALK BY OTHERS OR END SIDEWALK FOR FUTURE EXTENSION.

PROVIDE AND INSTALL 5" WIDE CONCRETE CURBING (5.5" REVEAL – TOP OF BINDER TO TOP OF CURB)

PROVIDE AND INSTALL 4" TOPSOIL & TURF ESTABLISHMENT (TYP.)

END TAPER AND 5" WIDE CONCRETE CURB FLUSH WITH WALK

BEGIN TAPER 5" WIDE CONCRETE CURB (4" REVEAL)

PROVIDE AND INSTALL CONCRETE SIDEWALK RAMP (TYPE 1) WITH DETECTABLE WARNING STRIP

END 5" WIDE CONCRETE CURB (5.5" REVEAL – TOP OF BINDER TO TOP OF CURB) AT CURB RETURN.

PROVIDE AND INSTALL CONCRETE SIDEWALK RAMP (TYPE 4b) WITH DETECTABLE WARNING STRIP

END 5" WIDE CONCRETE CURB (5.5" REVEAL – TOP OF BINDER TO TOP OF CURB) AT CURB RETURN.

PROVIDE AND INSTALL TEMPORARY PEDESTRIAN CROSSWALK. 8-FT LONG 2-FT WIDE WHITE STRIPE, 4-FT ON CENTER.

LIMIT OF ROADWAY CONSTRUCTION

PROVIDE AND INSTALL 5" WIDE CONCRETE CURBING (5.5" REVEAL – TOP OF BINDER TO TOP OF CURB)

PROVIDE AND INSTALL 5-FT WIDE CONCRETE SIDEWALK (TYP.)

PROVICE AND INSTALL CONCRETE SIDEWALK RAMP (TYPE 4c) WITH DETECTABLE WARNING STRIP

LIMITS OF TREE CLEARING (TYP.)

LIMIT OF CONSTRUCTION LINE (TYP).

SILT FENCE (TYP.)

BEGIN SEGMENTAL MODULAR BLOCK RETAINING WALL (TYP.)

PROTECT AND PRESERVE EXISTING STORM DRAIN PIPE

END MERRITT PARKWAY TYPE GUIDERAIL SYSTEM. INSTALL TEMPORARY TYPE I END ANCHORAGE FOR FUTURE EXTENSION BY OTHERS.

END 5" WIDE CONCRETE CURBING (5.5" REVEAL – TOP OF BINDER TO TOP OF CURB)

END SEGMENTAL MODULAR BLOCK RETAINING WALL (TYP.)

LIMITS OF TREE CLEARING (TYP.)

WL #62
WL #32
WL #6
WL #60
WL #33
WL #59
WL #36
WL #37
WL #57
WL #38
Flow

PROVIDE AND INSTALL TEMPORARY PRECAST BARRIER CURB

REFER TO GRADING DRAINAGE & UTILITY SITE PLAN C-102, STORRS CENTER GR-1 PARKING FACILITY PLANS PREPARED BY CABEZAS-DeANGELIS, DATED JULY 20, 2011 FOR ADDITIONAL INFORMATION REGARDING PROPOSED GRADING AND DRAINAGE ELEMENTS IN THIS AREA.

END ROADWAY CONSTRUCTION
STA. 124+31.75

END 5" WIDE CONCRETE CURBING (5.5" REVEAL – TOP OF BINDER TO TOP OF CURB)

PROVIDE AND INSTALL CONCRETE SIDEWALK RAMP (TYPE 4b) WITH DETECTABLE WARNING STRIP

PROVIDE AND INSTALL TEMPORARY PEDESTRIAN CROSSWALK. 8-FT LONG 2-FT WIDE WHITE STRIPE, 4-FT ON CENTER.

GRAPHIC SCALE
20 10 0 20
SCALE IN FEET

FOR PERMITTING PURPOSES ONLY NOT RELEASED FOR CONSTRUCTION

BL Companies
ARCHITECTURE
ENGINEERING
PLANNING
LANDSCAPE ARCHITECTURE
LAND SURVEYING
ENVIRONMENTAL SCIENCES

355 Research Parkway
Meriden, CT 06450
(203) 630-1406
(203) 630-2615 Fax

DOG LANE CONNECTOR
STORRS CENTER
MANSFIELD, CONNECTICUT

REVISIONS
No. Date Desc.

Designed	J.I.G.
Drawn	E.L.Z. / J.I.G.
Checked	
Approved	
Scale	1"=20'
Project No.	10C3350B
Date	9/15/11
CAD File	THWY10C3550B01

Title
ROADWAY CONSTRUCTION PLAN

Sheet No.
HWY-1

Xref (s): ; XR03C66700 ; XR03C66701 ; XY03C66701 ; XR08C30798O1 ; XC03C66701 ; XR08C30798O2 ; XR10C355000 ; IBD10C3550B01 ; XR10C3550O1B ; XR10C3550O2 ; XR10C3550OB2

Sep 15, 2011 1:40pm EZeazny K:\obs03\03c667\dwg\THWY10C3550B01.dwg
Layout: HWY-1 24X36 20sc

THESE DRAWINGS SHALL NOT BE UTILIZED BY ANY PERSON, FIRM OR CORPORATION WITHOUT THE SPECIFIC WRITTEN PERMISSION OF BL COMPANIES

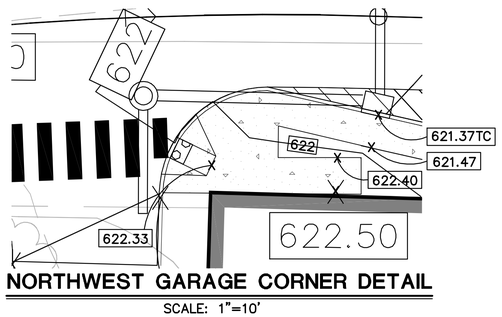

NORTHWEST GARAGE CORNER DETAIL

SCALE: 1"=10'

BEGIN ROADWAY CONSTRUCTION
MATCH STATE PROJECT #77-227
STA. XX+XX.XX

APPROX. LIMITS OF FILL SLOPE

HDPE FLARED END C-900
INV OUT=612.26

10 LF 15" HDPE S=3.2%

CB C901
TYPE "C" C.B.
(4' SUMP)
STA. 123+22.0 10' L
TF=618.00
INV IN(15"NW)=612.58
INV IN(15"SW)=614.47
INV OUT(15")=612.58

15 LF 15" HDPE S=1.0%

134 LF 15" HDPE S=1.8%

TYPE "C" C.B.
(4' SUMP)
STA. 121+85.0 10' L
TF=621.10
INV IN(15")=614.99
INV OUT(15")=614.99

18 LF 15" HDPE S=0.66%

28 LF 15" H.D.P.E. PIPE
S=1.0%

APPROX. LIMITS OF FILL SLOPE

GRASS LINED SWALE

OUTLET PROTECTION
TYPE 'A' INTERMEDIATE
RIPRAP APRON

REFER TO GRADING DRAINAGE & UTILITY SITE PLAN C-102, STORRS CENTER GR-1 PARKING FACILITY PLANS PREPARED BY CABEZAS-DeANGELIS, DATED JULY 20, 2011 FOR ADDITIONAL INFORMATION REGARDING PROPOSED GRADING AND DRAINAGE ELEMENTS IN THIS AREA.

END ROADWAY CONSTRUCTION
STA. 124+31.75

REFER TO GRADING DRAINAGE & UTILITY SITE PLAN C-102, STORRS CENTER GR-1 PARKING FACILITY PLANS PREPARED BY CABEZAS-DeANGELIS, DATED JULY 20, 2011 FOR ADDITIONAL INFORMATION REGARDING PROPOSED GRADING AND DRAINAGE ELEMENTS IN THIS AREA.

APPROX. LIMITS OF FILL SLOPE

608.00TW
606.00BW

614.50TW
610.00BW

616.50TW
609.50BW

617.50TW
616.00BW

617.50TW
610.00BW

622.60

622.93

622.98TC
622.65BC

622.56TC
622.23BC

622.50

FFE=622.50

622.49TC
622.16BC

616.67TC
616.67BC

616.33TC
616.00BC

FFE=616.00

DOG LANE CONNECTOR

DOG LANE

VILLAGE STREET

CLUB

Flow

Le Brook

WL #28
WL #29
WL #30
WL #31
WL #32
WL #33
WL #37
WL #38
WL #60
WL #61
WL #62
WL #63
WL #64

STORM MANHOLE
STA. 121+52.0 11' R
TF=621.85
INV IN(15")= 615.49
INV OUT(15")=615.39

14 LF 15" HDPE S=1.0%
TEMPORARILY PLUG END
OF PIPE AND MARK
TERMINATION POINT WITH
A 2"X6" BOARD.

CB
TYPE "C" C.B.
(4' SUMP)
STA. 121+85.0 13.2' R
TF=621.04
INV IN(15")=615.11
INV OUT(15")=615.11

CB C902
TYPE "C" C.B.
(4' SUMP)
STA. 123+22.0 10' R
TF=618.00
INV OUT(12")=614.62

REFER TO GRADING DRAINAGE & UTILITY SITE PLAN C-102, STORRS CENTER GR-1 PARKING FACILITY PLANS PREPARED BY CABEZAS-DeANGELIS, DATED JULY 20, 2011 FOR ADDITIONAL INFORMATION REGARDING PROPOSED GRADING AND DRAINAGE ELEMENTS IN THIS AREA.

HANDICAP SIDEWALK RAMPS SHALL BE INSTALLED WITH A TEMPORARY 1.5" REVEAL TO TOP OF BINDER. INSTALL TEMPORARY 1.5" HIGH BY 12" LONG BITUMINOUS RAMP FROM EDGE OF CURB TO TOP OF BINDER. UNDER FINISHED CONDITIONS RAMPS SHALL BE FLUSH WITH FUTURE WEARING COURSE BY OTHERS.

ROAD GRADES AND TC ELEVATIONS ARE DEPICTED AS FINISHED GRADE AT TOP OF WEARING SURFACE. THE CONTRACTOR SHALL ONLY INSTALL THE BINDER COURSE AND LEAVE THE WEARING COURSE FOR FUTURE INSTALLATION BY OTHERS. THE CONTRACTOR SHALL TAKE INTO ACCOUNT THE THICKNESS OF THE WEARING COURSE WHEN SETTING GRADES. REFER TO TYPICAL CROSS SECTION SHEET TYP-1.

GRAPHIC SCALE
20 10 0 20
SCALE IN FEET

FOR PERMITTING PURPOSES ONLY NOT RELEASED FOR CONSTRUCTION

BL Companies
ARCHITECTURE
ENGINEERING
PLANNING
LANDSCAPE ARCHITECTURE
LAND SURVEYING
ENVIRONMENTAL SCIENCES

355 Research Parkway
Meriden, CT 06450
(203) 630-1406
(203) 630-2615 Fax

DOG LANE CONNECTOR

STORRS CENTER
MANSFIELD, CONNECTICUT

REVISIONS
No. Date Desc.

Designed	J.I.G.
Drawn	E.L.Z. / J.I.G.
Checked	
Approved	
Scale	1"=20'
Project No.	10C3350B
Date	9/15/11
CAD File	TGDR10C3550B01

Title
GRADING AND DRAINAGE PLAN

Sheet No.
GDR-1

Xref (s): ; XR03C566700 ; XR03C566701 ; XY03C566701 ; XR08C3079B01 ; XC03C567001 ; XR08C3079B02 ; XR10C3550001 ; IB10C3550B01 ; XR10C3550002 ; XR10C3550018 ; XR10C3550082

Sep 15, 2011 1:40pm EZekany K:\obs03\03c567\dwg\TGDR10C3550B01.dwg
Layout: GDR-1 24X36 20sc

THESE DRAWINGS SHALL NOT BE UTILIZED BY ANY PERSON, FIRM OR CORPORATION WITHOUT THE SPECIFIC WRITTEN PERMISSION OF BL COMPANIES

SITE UTILITY LEGEND

WATER LINE	W
SANITARY SEWER LINE	S
ELECTRIC CONDUIT	E
TELEPHONE/CABLE	T/C
GAS MAIN	G
SANITARY MANHOLE	●
HYDRANT	
GATE VALVE	
DECORATIVE STREET LIGHT	

ELECTRIC CONDUIT INSTALLED WITH GREATER THAN 30–INCHES OF COVER DO NOT NEED TO BE ENCASED IN CONCRETE. ALL ELECTRIC CONDUIT INSTALLED SHALLOWER THAN 30–INCHES OF COVER SHALL BE ENCASED IN CONCRETE PER CL&P STANDARDS.

CONTRACTOR SHALL COORDINATE UTILITY AND CONDUIT INSTALLATION WITH RESPECTIVE UTILITY COMPANIES AND INSTALL PER APPLICABLE STANDARDS.

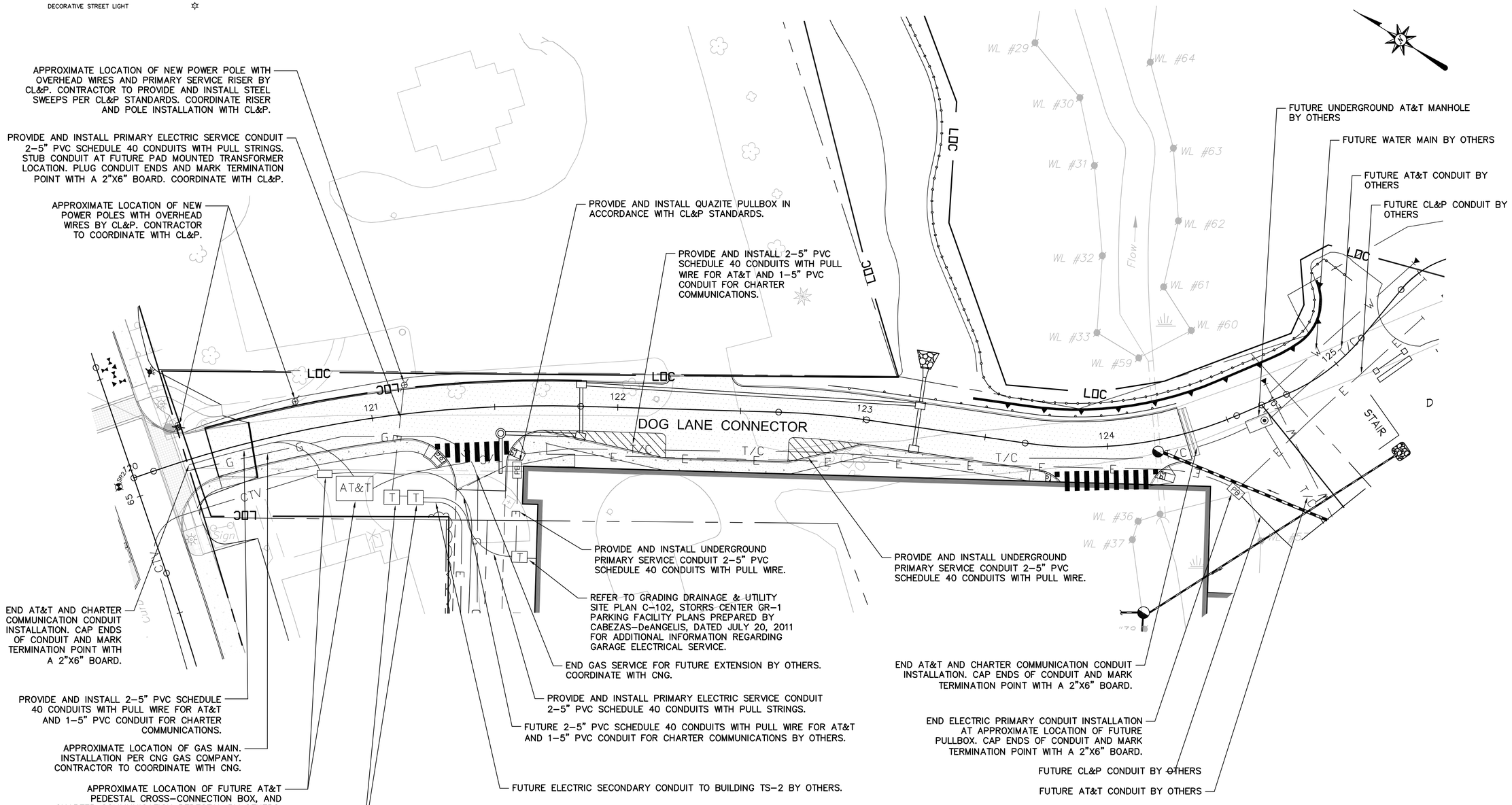

FOR PERMITTING PURPOSES ONLY
NOT RELEASED FOR CONSTRUCTION

BL Companies
ARCHITECTURE
ENGINEERING
PLANNING
LANDSCAPE ARCHITECTURE
LAND SURVEYING
ENVIRONMENTAL SCIENCES

355 Research Parkway
Meriden, CT 06450
(203) 630-1406
(203) 630-2615 Fax

DOG LANE CONNECTOR
STORRS CENTER
MANSFIELD, CONNECTICUT

REVISIONS

No.	Date	Desc.

Designed	J.I.G.
Drawn	E.L.Z. / J.I.G.
Checked	
Approved	
Scale	1"=20'
Project No.	10C3350B
Date	9/15/11
CAD File	TUTL10C3550B01

Title
UTILITY CONSTRUCTION PLAN

Sheet No.
UTL-1

Xref (s): ; XR03C667700 ; XR03C667701 ; XY03C667701 ; XR0BC3079B01 ; XC03C667001 ; XR08C3079B02 ; XR10C3550001 ; IB10C3550B01 ; XR10C3550002 ; XR10C3550003 ; XR10C3550018 ; XR10C3550082

Sep 15, 2011 12:48pm EZelazny K:\Jobs\03\03c667\dwg\TUTL10C3550B01.dwg
Layout: UTL–1 24X36 20sc

THESE DRAWINGS SHALL NOT BE UTILIZED BY ANY PERSON, FIRM OR CORPORATION WITHOUT THE SPECIFIC WRITTEN PERMISSION OF BL COMPANIES

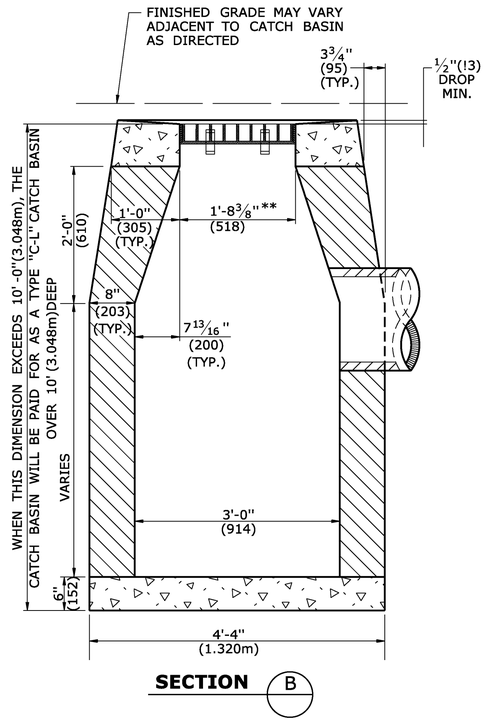

TYPE "C-L" CATCH BASIN

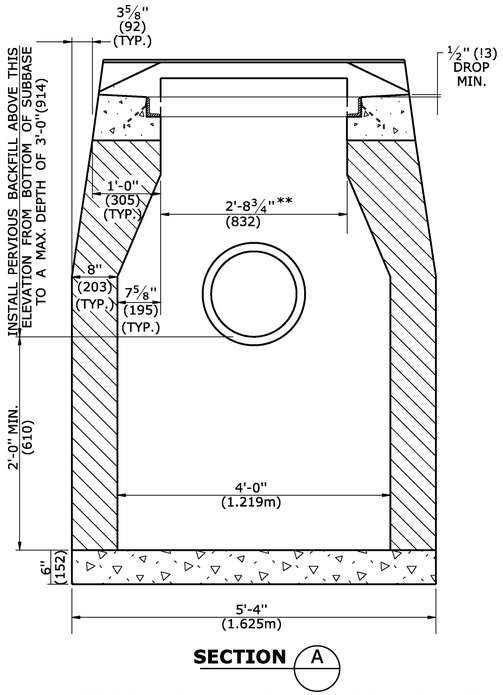

TYPE "C" & "C-L" CATCH BASIN (TYPE "C" TOP SHOWN)

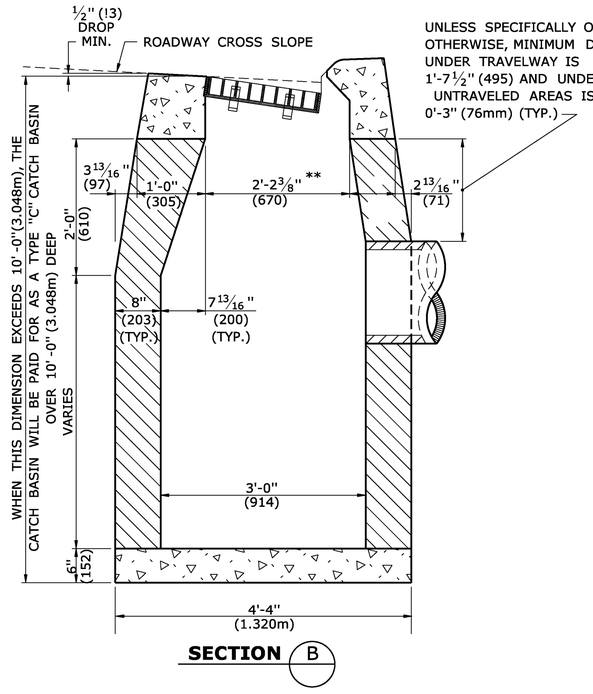

TYPE "C" CATCH BASIN

GENERAL NOTES:

1. FOR DETAILS OF FRAME AND GRATE SEE STANDARD SHEET HW-507_08.
2. USE APPROPRIATE CONCRETE TOP FOR CURBING SHOWN ON PLANS. IF CURBING IS NOT SPECIFIED ON THE PLANS, IT SHALL BE CONSTRUCTED AS DIRECTED BY THE ENGINEER.
3. ALL FACES OF STRUCTURES IN CONTACT WITH CONCRETE PAVEMENT SHALL BE COVERED WITH A LAYER OF TAR PAPER OR APPROVED EQUAL. THE COST FOR THE PAPER SHALL BE INCLUDED IN THE BID PRICE FOR THE TYPE OF CATCH BASIN INSTALLED.
4. USE 6'-0" (1.830m) ON UPGRADE SIDE OF CONTINUOUS GRADE AND 1'-0" (305mm) ON DOWNGRADE SIDE OF CONTINUOUS GRADE OR AS DIRECTED.
5. IF MASONRY UNITS ARE REQUIRED, THE BASIN SHALL BE CONSTRUCTED IN CONFORMANCE WITH THE OVER ALL DIMENSIONS SHOWN HERE AND SECTION 5.07 OF THE STATE OF CONNECTICUT'S STANDARD SPECIFICATIONS. CORBELLING SHALL BE PERMITTED TO A MAXIMUM OF 3" (75mm.) NO PROJECTION SHALL EXTEND INSIDE THE LIMITS NOTED BY **.
6. WALL THICKNESS OF ALL CB'S OVER 10' (3.048m) DEEP SHALL BE INCREASED TO 12" (305mm) THICK. INSIDE DIMENSION SHALL REMAIN THE SAME. 12" (305mm) THICKNESS WILL START AFTER THE FIRST 10' (3.048m).
7. TO CONVEY SUBSURFACE DRAINAGE, OPENINGS SHALL BE FORMED IN THE FOUR WALLS AT OR IMMEDIATELY ABOVE THE BOTTOM OF THE PERVIOUS BACKFILL.
8. MINIMUM CONCRETE COMPRESSIVE STRENGTH OF F'c = 4000 PSI (27,580 kPa) SHALL BE OBTAINED PRIOR TO SHIPPING.
9. LATEST STATE OF CONNECTICUT'S STANDARD SPECIFICATIONS AND SUPPLEMENTALS SHALL GOVERN.

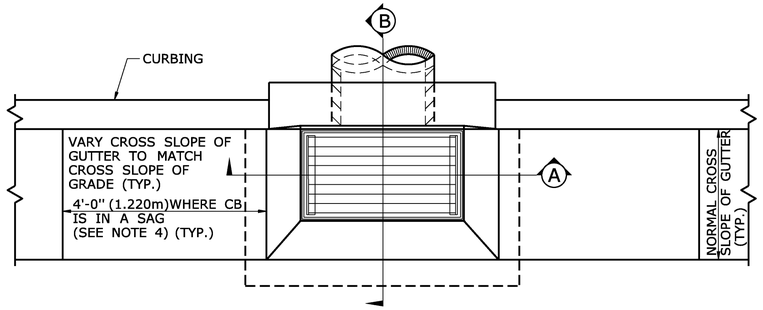

PLAN

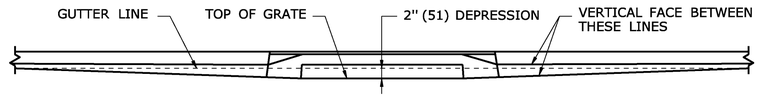

FOR CATCH BASINS IN A LINE OF 4" (102) CONCRETE PARK CURBING OR 4" (102) BITUMINOUS CONCRETE PARK CURBING

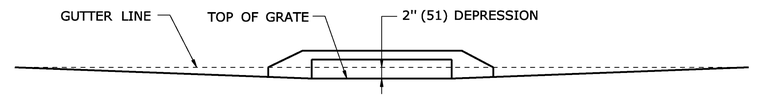

FOR CATCH BASINS WHERE NO CURBING OF ANY TYPE EXISTS OR IS PROPOSED

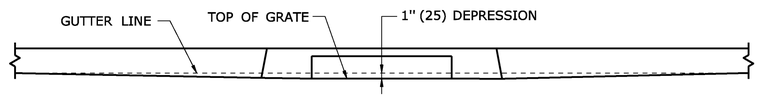

FOR CATCH BASINS IN A LINE OF 6" (152) CONCRETE CURBING OR 6" (152) STONE CURBING

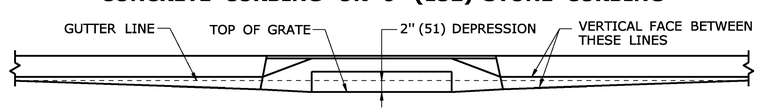

FOR CATCH BASINS IN A LINE OF 6" (152) BITUMINOUS CONCRETE LIP CURBING (MACHINE FORMED)

DETAILS OF DEPRESSED GUTTER STRIP FOR TYPE "C" CATCH BASIN

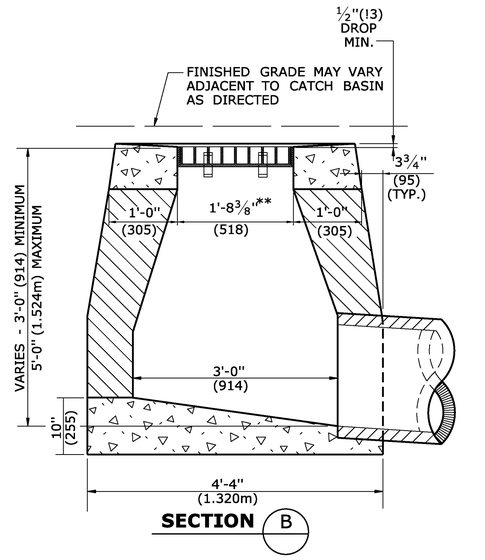

TYPE "C-L" DROP INLET

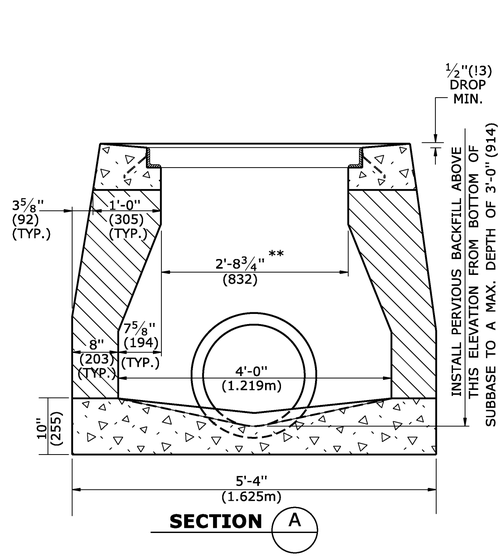

TYPE "C" & "C-L" DROP INLET (TYPE "C-L" TOP SHOWN)

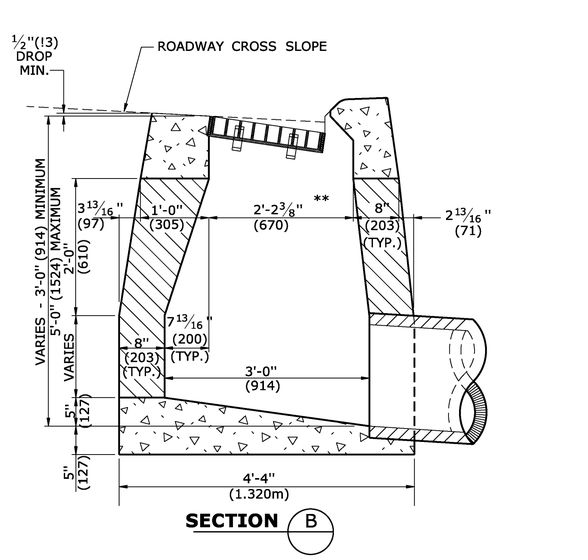

TYPE "C" DROP INLET

ALL METRIC DIMENSIONS ARE IN MILLIMETERS (mm) UNLESS OTHERWISE NOTED

REV.	DATE	REVISION DESCRIPTION
-	-	-
-	-	-
-	-	-
-	-	-
-	-	-
-	-	-

THE INFORMATION, INCLUDING ESTIMATED QUANTITIES OF WORK, SHOWN ON THESE SHEETS IS BASED ON LIMITED INVESTIGATIONS BY THE STATE AND IS IN NO WAY WARRANTED TO INDICATE THE CONDITIONS OF ACTUAL QUANTITIES OF WORK WHICH WILL BE REQUIRED.

Plotted Date: 9/11/2009

NOT TO SCALE

STATE OF CONNECTICUT
DEPARTMENT OF TRANSPORTATION

Filename: CTDOT_HIGHWAY_STD.dgn Model: HW-507_01

SUBMITTED BY:	NAME/DATE/TIME:
	Timothy M. Wilson 2009.09.16 11:10:00 -04'00'
APPROVED BY:	NAME/DATE/TIME:
	James H. Norman 2009.09.18 14:19:35 -04'00'

CTDOT STANDARD SHEET

OFFICE OF ENGINEERING

STANDARD SHEET TITLE:

TYPE "C" , "C-L" & DROP INLET CATCH BASIN

STANDARD SHEET NO.:

HW-507_01

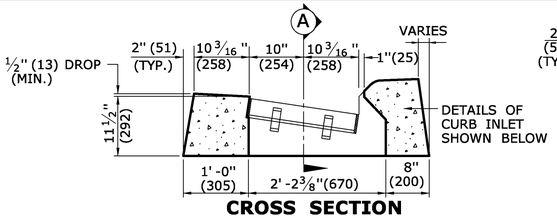

CROSS SECTION

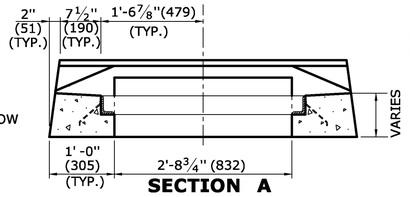

SECTION A

TYPE "C" CATCH BASIN TOP

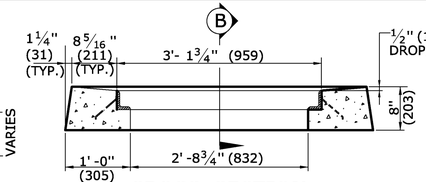

CROSS SECTION

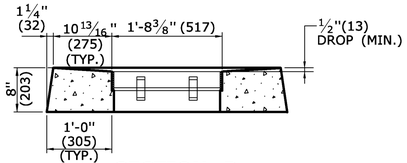

SECTION B

TYPE "C-L" CATCH BASIN TOP

GENERAL NOTES:

1. FOR DETAILS OF FRAME AND GRATE SEE STANDARD SHEET HW-507_08.
2. ALL STEEL, EXCEPT REINFORCING BARS, SHALL BE GALVANIZED IN CONFORMANCE WITH SECTION M06.03 OF CONNECTICUT'S STANDARD SPECIFICATIONS.
3. ALL BARS SHALL HAVE A MINIMUM 2" (51) COVER.

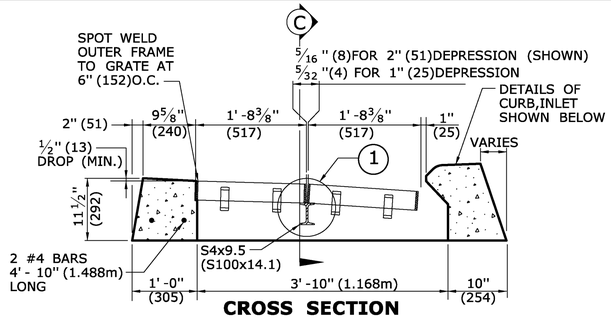

CROSS SECTION

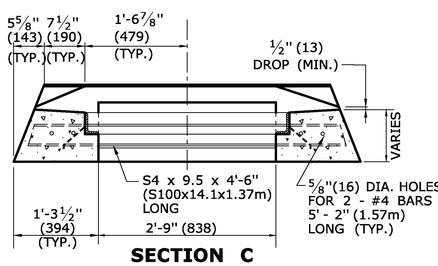

SECTION C

TYPE "C" CATCH BASIN DOUBLE GRATE - TYPE I TOP

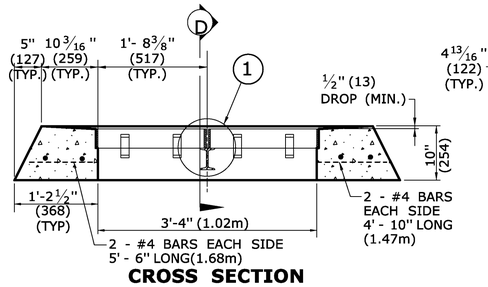

CROSS SECTION

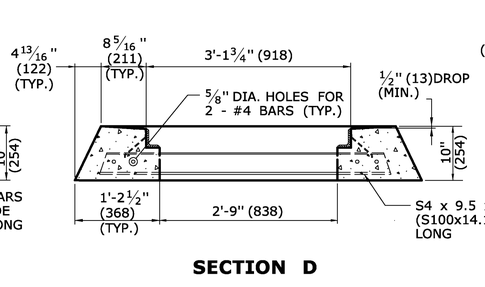

SECTION D

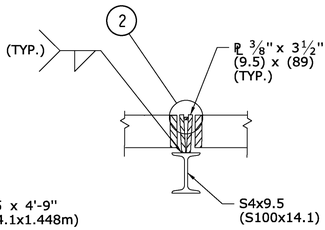

DETAIL "1"

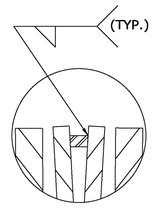

DETAIL "2"

TYPE "C-L" CATCH BASIN DOUBLE GRATE - TYPE I TOP

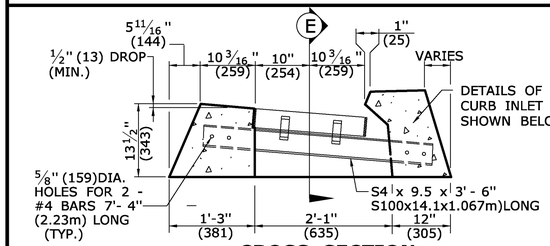

CROSS SECTION

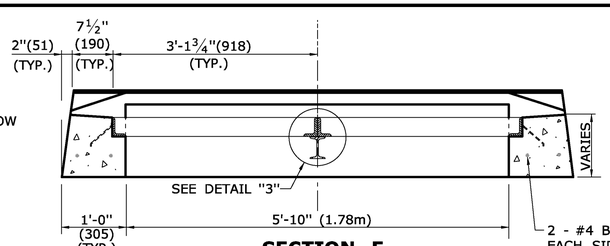

SECTION E

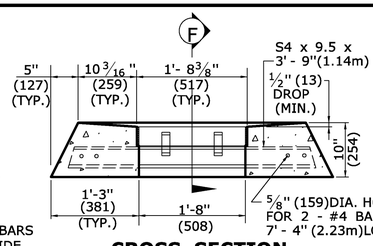

CROSS SECTION

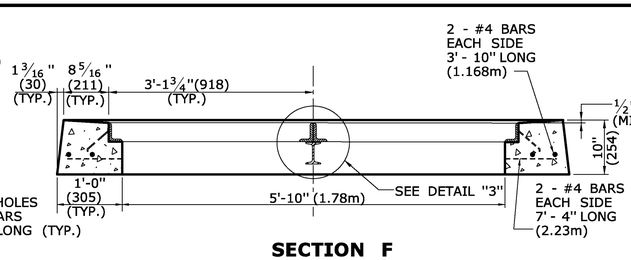

SECTION F

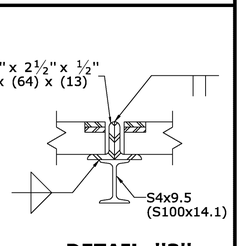

DETAIL "3"

TYPE "C" CATCH BASIN DOUBLE GRATE - TYPE II TOP

TYPE "C-L" CATCH BASIN DOUBLE GRATE - TYPE II TOP

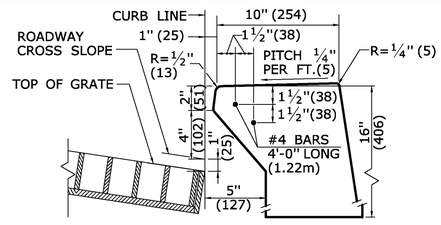

INLET WITH 6" (152) CONCRETE OR STONE CURBING FOR TYPE "C" CB

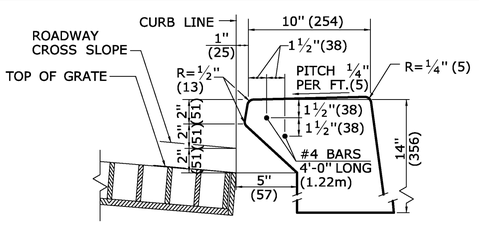

INLET WITH NO CURBING (PLAIN TYPE) FOR TYPE "C" CB

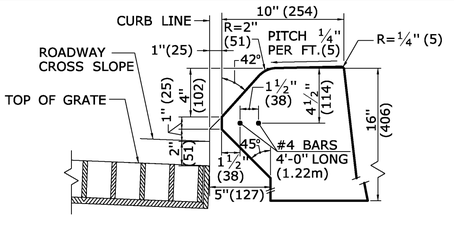

INLET WITH 6" (152) BITUMINOUS CONCRETE LIP CURBING FOR TYPE "C" CB

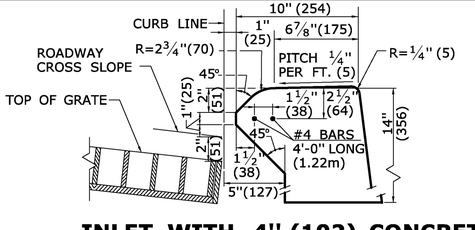

INLET WITH 4" (102) CONCRETE PARK CURBING FOR TYPE "C" CB

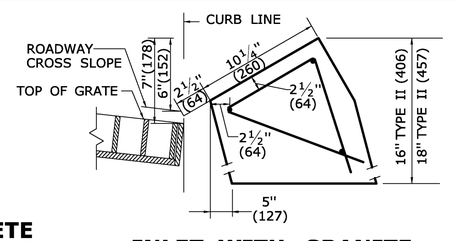

INLET WITH GRANITE SLOPE CURB FOR TYPE "C" CB

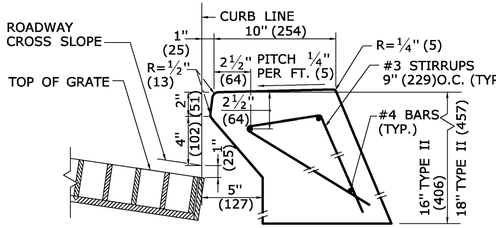

INLET WITH 6" (152) CONCRETE OR STONE CURBING FOR TYPE "C" CB DOUBLE GRATE TYPE I & II

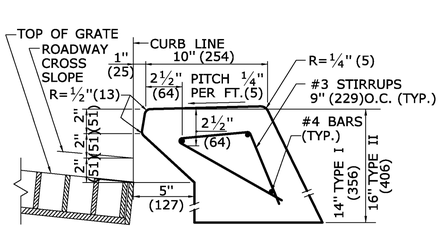

INLET WITH NO CURBING (PLAIN TYPE) FOR TYPE "C" CB DOUBLE GRATE TYPE I & II

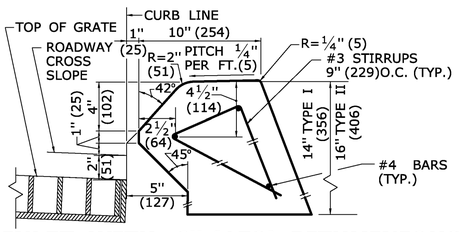

INLET WITH 6" (152) BITUMINIOUS CONCRETE LIP CURBING FOR TYPE "C" CB DOUBLE GRATE TYPE I & II

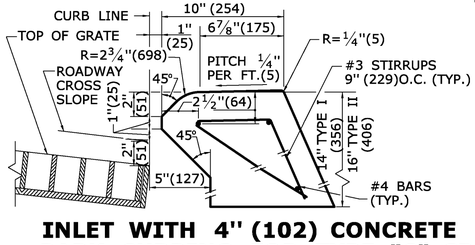

INLET WITH 4" (102) CONCRETE PARK CURBING FOR TYPE "C" CB DOUBLE GRATE TYPE I & II

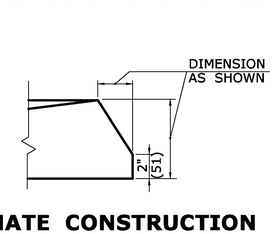

ALTERNATE CONSTRUCTION OF TYPE II TOP

ALL METRIC DIMENSIONS ARE IN MILLIMETERS (mm) UNLESS OTHERWISE NOTED

REV.	DATE	REVISION DESCRIPTION
1	6/01/10	REVISE CALL-OUT
-	-	-
-	-	-
-	-	-
-	-	-
-	-	-

THE INFORMATION, INCLUDING ESTIMATED QUANTITIES OF WORK, SHOWN ON THESE SHEETS IS BASED ON LIMITED INVESTIGATIONS BY THE STATE AND IS IN NO WAY WARRANTED TO INDICATE THE CONDITIONS OF ACTUAL QUANTITIES OF WORK WHICH WILL BE REQUIRED.

Plotted Date: 5/20/2010

NOT TO SCALE

STATE OF CONNECTICUT
DEPARTMENT OF TRANSPORTATION

Filename: CTDOT_HIGHWAY_STD.dgn Model: HW-507_07

SUBMITTED BY: NAME/DATE/TIME:
Leo Fontaine 2010.05.28 10:26:43 -04'00'

APPROVED BY: NAME/DATE/TIME:
James H. Norman
Digitally signed by James H. Norman
DN: c=US, st=CT, l=Newington, ou=Department of Transportation, email=james.norman@ct.gov, o=State of Connecticut, cn=James H. Norman
Date: 2010.06.04 08:17:32 -04'00'

CTDOT STANDARD SHEET

OFFICE OF ENGINEERING

STANDARD SHEET TITLE:
TYPE "C" & "C-L" CATCH BASIN TOPS AND CURBS

STANDARD SHEET NO.:
HW-507_07

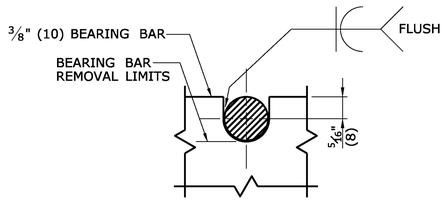

NOTE:
5/8" (16) DIA. ROUND BAR SHALL CONTACT BEARING BAR AT BOTTOM AND BE FLUSH AT TOP.

ROUND BAR ATTACHMENT
CATCH BASIN GRATE TYPE A

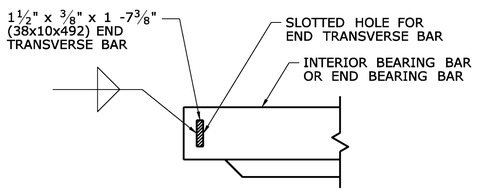

END TRANSVERSE BAR ATTACHMENT
CATCH BASIN GRATE TYPE A & B

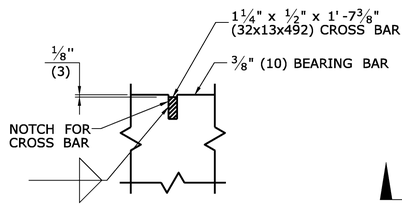

CROSS BAR ATTACHMENT
CATCH BASIN GRATE TYPE B

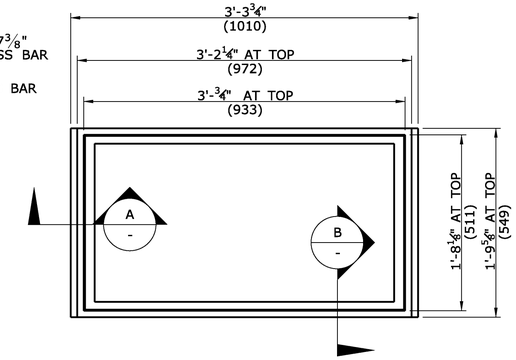

PLAN

GENERAL NOTES:

1. STEEL OR CAST IRON SHALL BE USED FOR FRAMES. STEEL SHALL BE USED FOR TYPE "A" & "B" GRATES.
2. TYPE "A" GRATES SHALL BE USED ON ALL ROADWAYS WHERE BICYCLE TRAFFIC IS ALLOWED OR AS DIRECTED BY THE ENGINEER.
3. TYPE "B" GRATES SHALL BE USED ON ALL LIMITED ACCESS HIGHWAYS, RAMPS AND WHERE BICYCLE TRAFFIC IS NOT ALLOWED OR AS DIRECTED BY THE ENGINEER.
4. STEEL FRAMES AND GRATES SHALL BE GALVANIZED IN ACCORDANCE WITH ARTICLE M.06.03.
5. DO NOT GALVANIZE CAST IRON FRAMES.
6. DIMENSIONAL TOLERANCES SHALL BE $\pm 1/16$".(1.6)
7. ALL STEEL BARS SHALL BE WELDED AT ALL INTERSECTIONS.
8. ALL WELDING SHALL CONFORM TO THE REQUIREMENTS OF AWS STRUCTURAL WELDING CODE, D1.1.

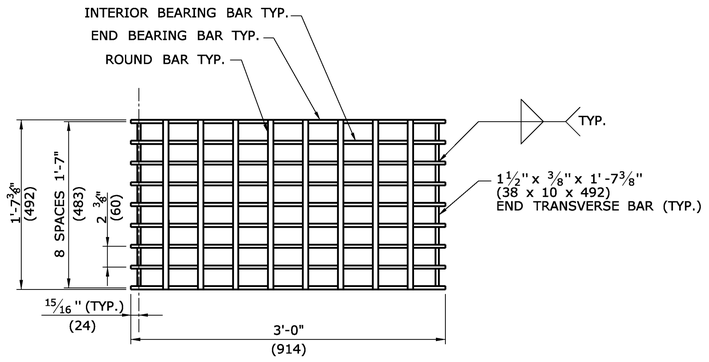

PLAN

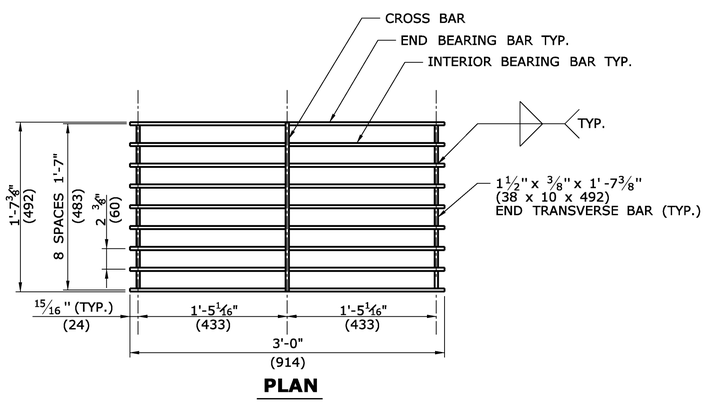

PLAN

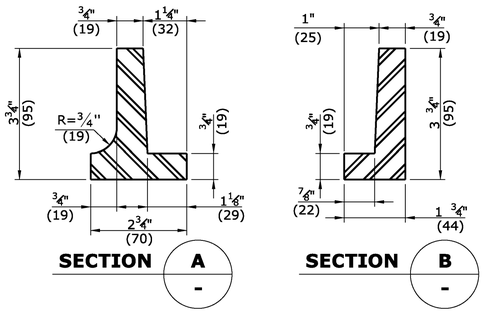

SECTION A -

SECTION B -

CAST IRON FRAME ALTERNATE

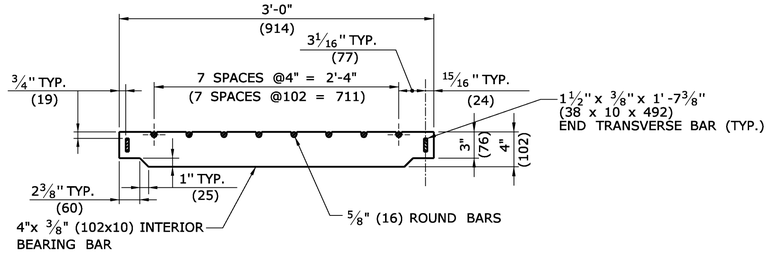

ELEVATION- INTERIOR BEARING BAR

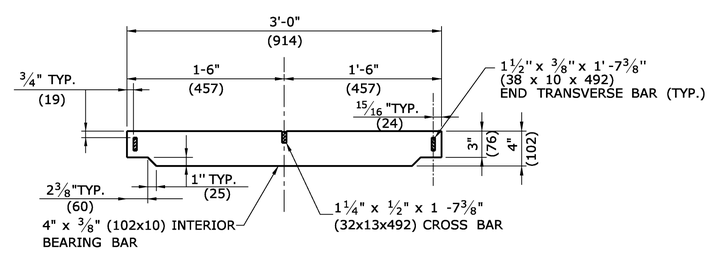

ELEVATION- INTERIOR BEARING BAR

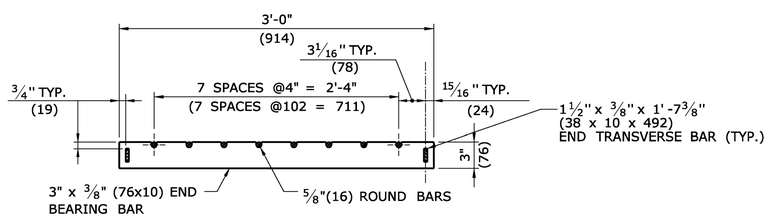

ELEVATION- END BEARING BAR
CATCH BASIN GRATE TYPE A

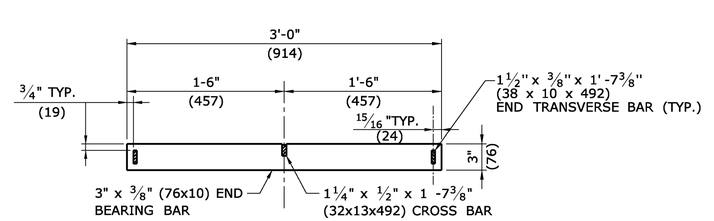

ELEVATION- END BEARING BAR
CATCH BASIN GRATE TYPE B

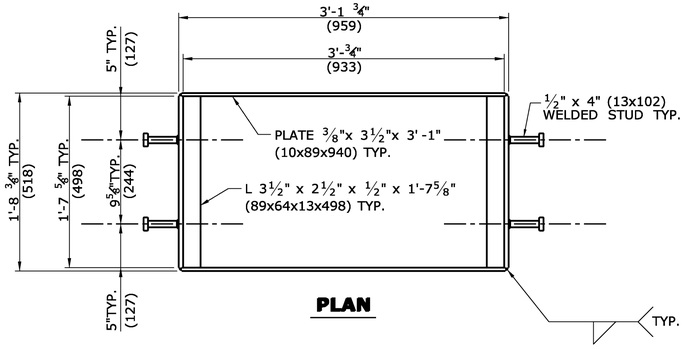

PLAN

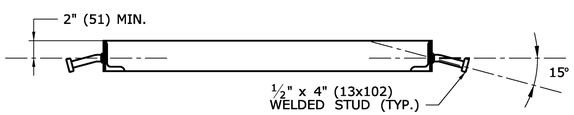

WELDED STUD ANCHOR DETAILS
STEEL FRAME

ALL METRIC DIMENSIONS ARE IN MILLIMETERS (mm) UNLESS OTHERWISE NOTED

REV.	DATE	REVISION DESCRIPTION
-	-	-
-	-	-
-	-	-
-	-	-
-	-	-
-	-	-

THE INFORMATION, INCLUDING ESTIMATED QUANTITIES OF WORK, SHOWN ON THESE SHEETS IS BASED ON LIMITED INVESTIGATIONS BY THE STATE AND IS IN NO WAY WARRANTED TO INDICATE THE CONDITIONS OF ACTUAL QUANTITIES OF WORK WHICH WILL BE REQUIRED.

Plotted Date: 9/11/2009

NOT TO SCALE

STATE OF CONNECTICUT
DEPARTMENT OF TRANSPORTATION

Filename: CTDOT_HIGHWAY_STD.dgn Model: HW-507_08

SUBMITTED BY:	NAME/DATE/TIME:
	Timothy M. Wilson 2009.09.16 11:16:32 -04'00'
APPROVED BY:	NAME/DATE/TIME:
	James H. Norman 2009.09.18 14:22:33 -04'00'

CTDOT STANDARD SHEET

OFFICE OF ENGINEERING

STANDARD SHEET TITLE:
CATCH BASIN FRAMES AND GRATES

STANDARD SHEET NO.:
HW-507_08

GENERAL NOTES:

1. CHANNELS MAY BE SHAPED IN CONCRETE BASE OF MANHOLE OR FORMED USING BRICK OR MASONRY.
2. A FRAME DIAMETER OF 3'-3" (991) WITH 4" (102) FLANGE MUST BE USED WHEN THE TOP DIAMETER OF THE PRECAST CONE IS LESS THAN 3'-6" (1067). ALL OTHER FRAME DIMENSIONS SHALL REMAIN THE SAME.
3. FRAME AND COVER:

	CAST IRON	STEEL
APPROX. COVER WEIGHT	184LB.(83kg)	134LB.(61kg)
APPROX. FRAME WEIGHT	312LB.(142kg)	227LB.(103kg)

4. ALL DIMESIONS SUBJECT TO MANUFACTURING TOLERANCES.

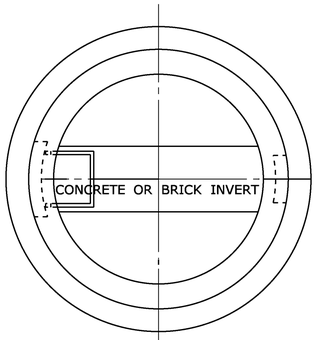

SECTION A

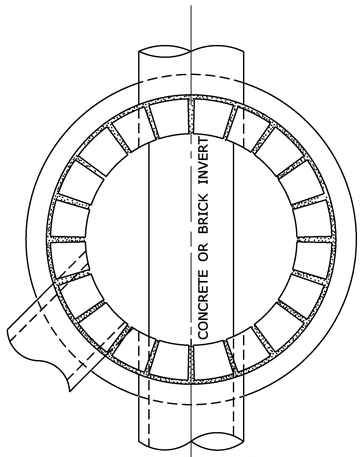

SECTION B

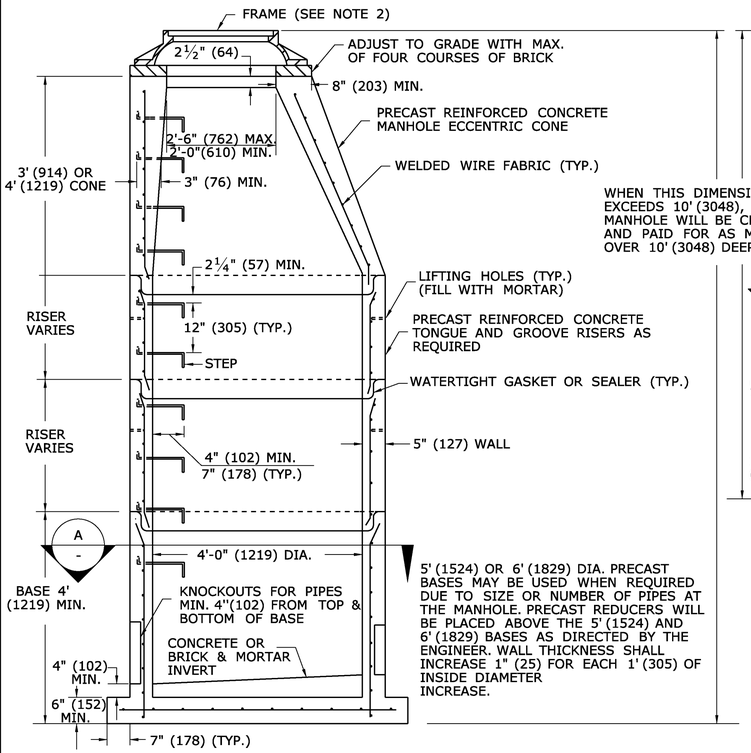

ELEVATION

MANHOLE

REINFORCED PRECAST CONCRETE UNIT

WHEN THIS DIMENSION EXCEEDS 10' (3048), MANHOLE WILL BE CLASSED AND PAID FOR AS MANHOLE OVER 10' (3048) DEEP.

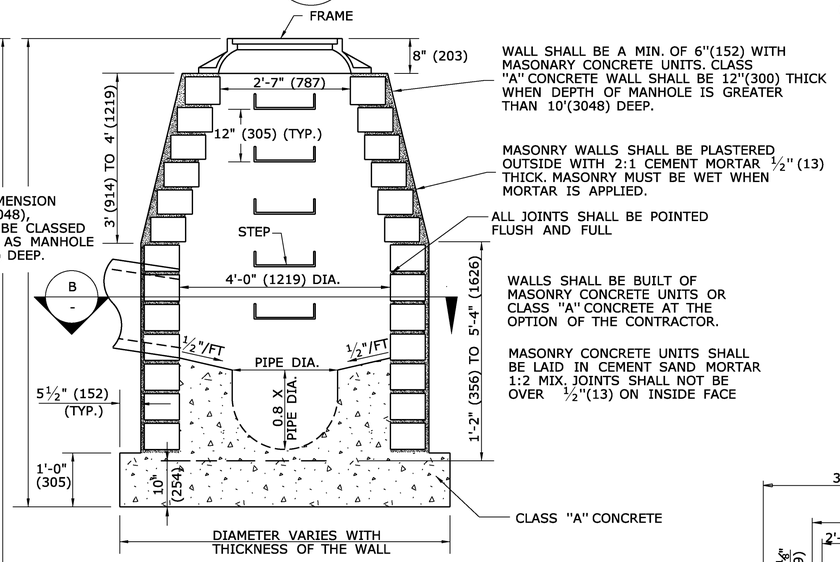

ELEVATION

MANHOLE

MASONARY CONCRETE UNIT OR CLASS "A" CONCRETE

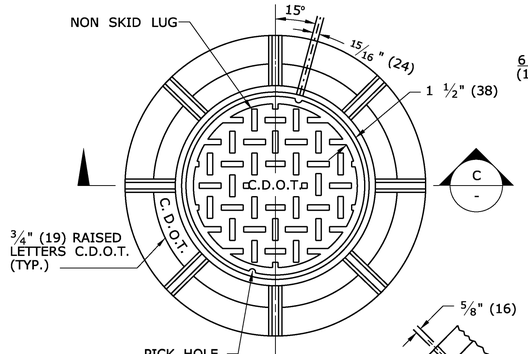

PLAN

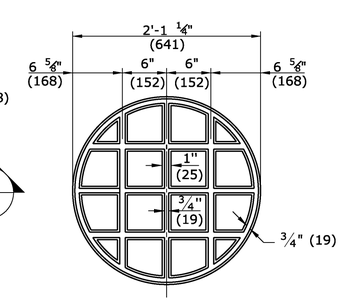

UNDERSIDE OF COVER DETAIL

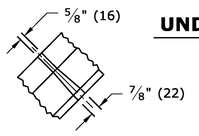

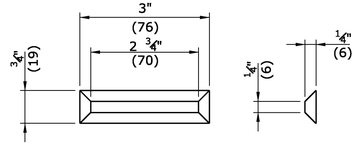

NON SKID LUG DETAIL

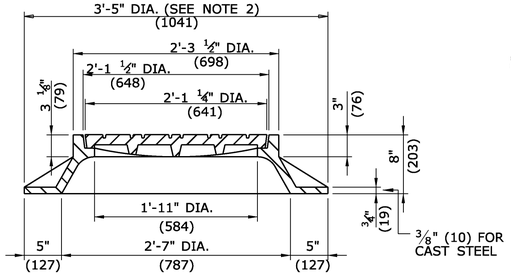

SECTION C

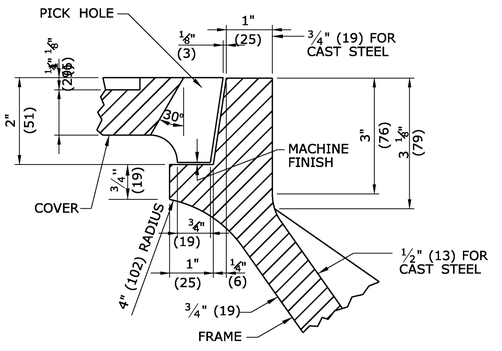

DETAIL OF SEAT

FRAME AND COVER DETAILS

ALL METRIC DIMENSIONS ARE IN MILLIMETERS (mm) UNLESS OTHERWISE NOTED

REV.	DATE	REVISION DESCRIPTION
-	-	-
-	-	-
-	-	-
-	-	-
-	-	-
-	-	-

THE INFORMATION, INCLUDING ESTIMATED QUANTITIES OF WORK, SHOWN ON THESE SHEETS IS BASED ON LIMITED INVESTIGATIONS BY THE STATE AND IS IN NO WAY WARRANTED TO INDICATE THE CONDITIONS OF ACTUAL QUANTITIES OF WORK WHICH WILL BE REQUIRED.

Plotted Date: 9/11/2009

NOT TO SCALE

STATE OF CONNECTICUT
DEPARTMENT OF TRANSPORTATION

Filename: CTDOT_HIGHWAY_STD.dgn Model: HW-507_10

SUBMITTED BY:	NAME/DATE/TIME:
	Timothy M. Wilson 2009.09.16 11:17:43 -04'00'
APPROVED BY:	NAME/DATE/TIME:
	James H. Norman 2009.09.18 14:23:21 -04'00'

CTDOT STANDARD SHEET

OFFICE OF ENGINEERING

STANDARD SHEET TITLE:

MANHOLE - FRAME & COVER

STANDARD SHEET NO.:

HW-507_10

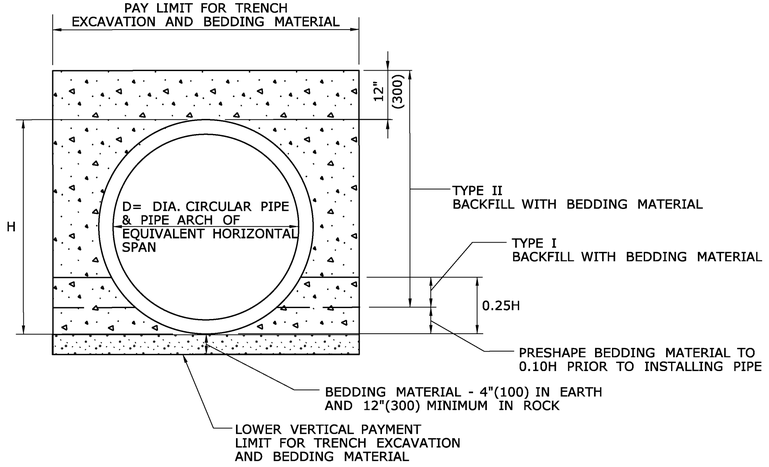

CULVERT TRENCH DETAIL

WHERE GRANULAR FILL IS NOT USED

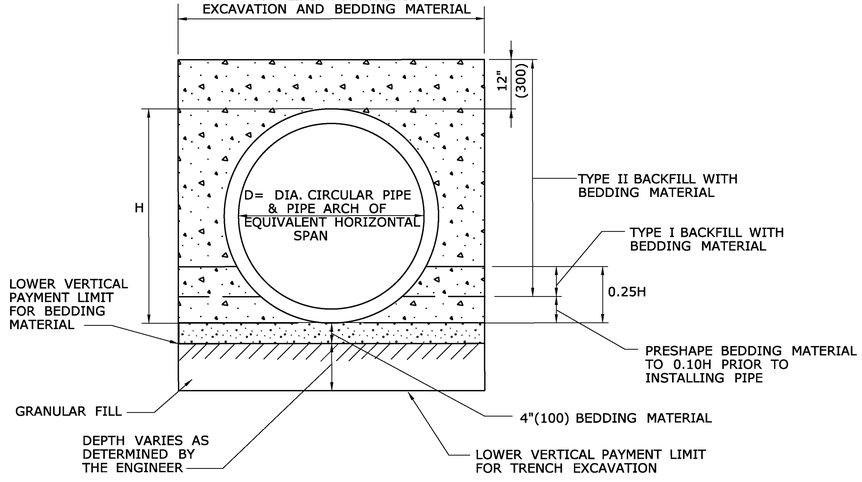

CULVERT TRENCH DETAIL

WHERE GRANULAR FILL IS USED AS BEDDING

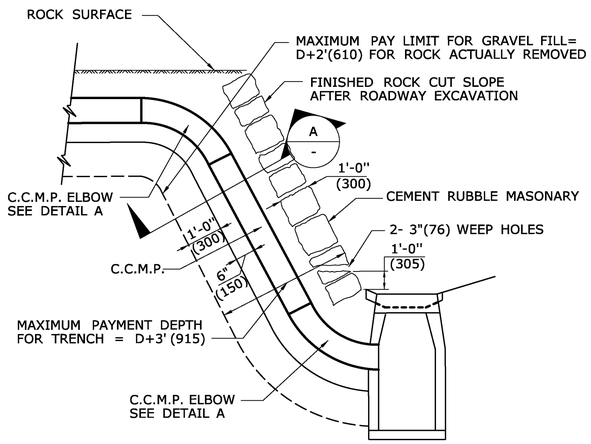

TYPICAL INSTALLATION OF C.C.M.P. IN ROCK SLOPE

GENERAL NOTES:

1. ROCK REMOVED BEYOND THE MAXIMUM PAY LIMIT SHOWN SHALL BE REPLACED WITH CEMENT RUBBLE MASONRY AND GRANULAR FILL.
2. FILL, AS REQUIRED TO CLOSE THE OPENING AS SHOWN ON THE PLANS, WILL BE AT THE CONTRACTORS EXPENSE. HOWEVER, THE PAY LIMIT LINES MAY BE MODIFIED TO COINCIDE WITH NATURAL FAULTS OR FISSURES OF ROCK AS THE ENGINEER MAY DETERMINE.

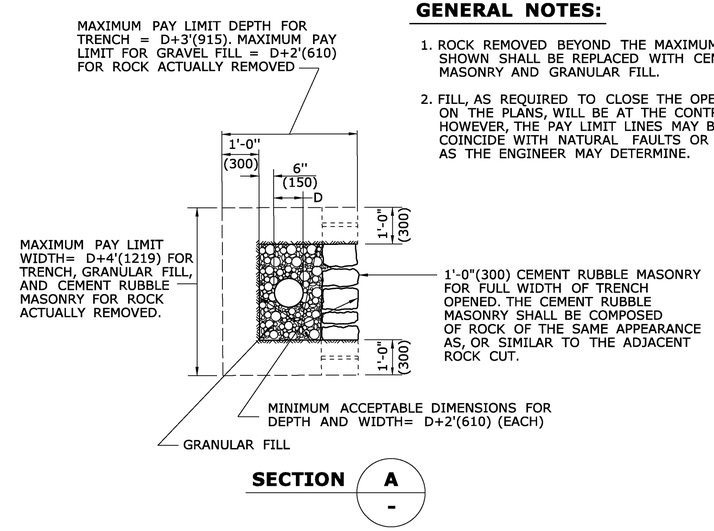

SECTION A / -

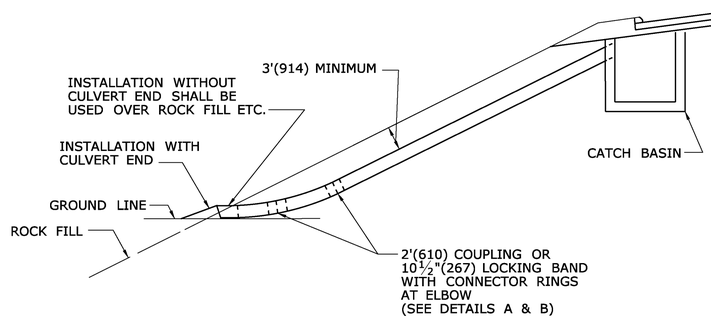

TYPICAL INSTALLATION OF C.C.M.P ELBOW IN FILL SLOPE

TABLE C
CONNECTOR RINGS

PIPE DIAMETER	LENGTH OF RING
12" (300)	52" (1321)
15" (381)	61" (1549)
18" (457)	71" (1803)
21" (533)	80" (2032)
24" (610)	90" (2286)
30" (762)	108" (2743)
36" (915)	128" (3251)
42" (1066)	147" (3734)
48" (1219)	166" (4216)

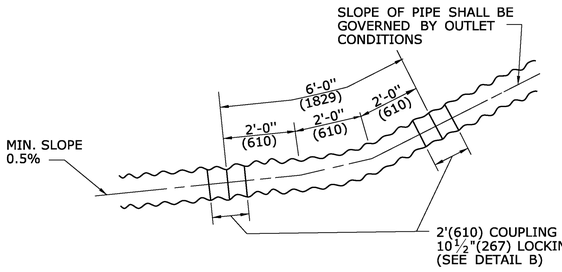

DETAIL A

C.C.M.P. ELBOW AND COUPLING

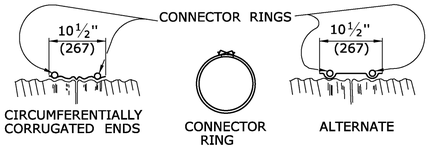

RODS: 7/16"(11) DIAMETER ELECTRO-GALVANIZED WITH 6"(152) LENGTH OF ½"(13) ROLLED THREADS EACH END, FURNISHED CURVED, TO FIT PIPE. SEE TABLE C

LUGS: DOUBLE TAKE UP, CAST IRON, ELECTRO-GALVINIZED.

NOTE: THE COUPLER FASTENING DEVICE SHALL NOT INTERFERE WITH INSTALLATION OF CONNECTOR RINGS.

DETAIL B

ELBOW DIMENSIONS

ALL METRIC DIMENSIONS ARE IN MILLIMETERS (mm) UNLESS OTHERWISE NOTED

REV.	DATE	REVISION DESCRIPTION
-	-	-
-	-	-
-	-	-
-	-	-
2	6/01/10	REVISE TITLE TO SAY TRENCH DETAIL
1	6/01/10	REMOVE GRAVEL, REPLACE W/ GRANULAR

THE INFORMATION, INCLUDING ESTIMATED QUANTITIES OF WORK, SHOWN ON THESE SHEETS IS BASED ON LIMITED INVESTIGATIONS BY THE STATE AND IS IN NO WAY WARRANTED TO INDICATE THE CONDITIONS OF ACTUAL QUANTITIES OF WORK WHICH WILL BE REQUIRED.

Plotted Date: 5/21/2010

NOT TO SCALE

STATE OF CONNECTICUT
DEPARTMENT OF TRANSPORTATION

Filename: CTDOT_HIGHWAY_STD.dgn Model: HW-651_01

SUBMITTED BY: NAME/DATE/TIME:
Leo Fontaine 2010.05.28 10:27:17 -04'00'

APPROVED BY: NAME/DATE/TIME:
James H. Norman Digitally signed by James H. Norman DN: c=US, st=CT, l=Newington, ou=Department of Transportation, email=james.norman@ct.gov, o=State of Connecticut, cn=James H. Norman Date: 2010.06.04 08:19:02 -04'00'

CTDOT STANDARD SHEET

OFFICE OF ENGINEERING

STANDARD SHEET TITLE:
C.C.M.PIPE INSTALLATIONS IN FILL & ROCK SLOPES & CULVERT TRENCH DETAIL

STANDARD SHEET NO.:
HW-651_01

GENERAL NOTES:

1. THE OUTLET ENDWALL CAN BE EITHER PRECAST OR CAST IN PLACE. CONCRETE SHALL BE CLASS "C" CONCRETE.
2. IF PRECAST CONCRETE ENDWALL IS USED, THE OUTLET SHALL BE GROUTED AND SEALED TO ENDWALL OPENING WITH NON-SHRINK GROUT.

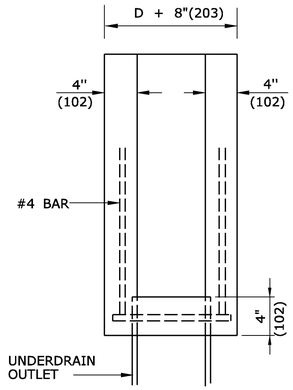

PLAN VIEW

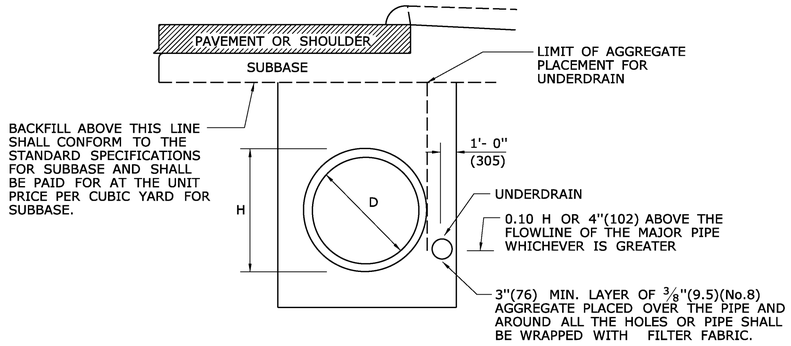

NOTE:
PAY LIMIT FOR TRENCH EXCAVATION AND BEDDING SHALL BE THE SAME AS FOR THE CULVERT ALONE. MATERIAL ABOVE THE BEDDING SHALL BE SUITABLE MATERIAL OR GRANULAR FILL.

CULVERT AND UNDERDRAIN IN THE SAME TRENCH

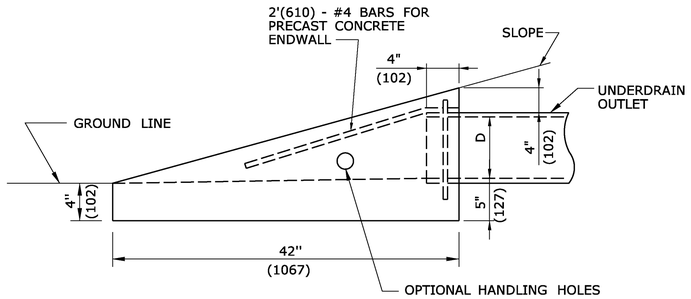

ENDWALL

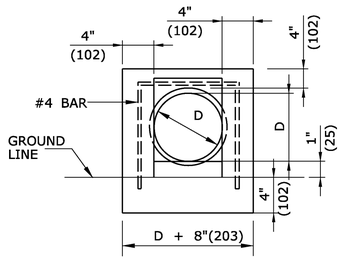

ELEVATION

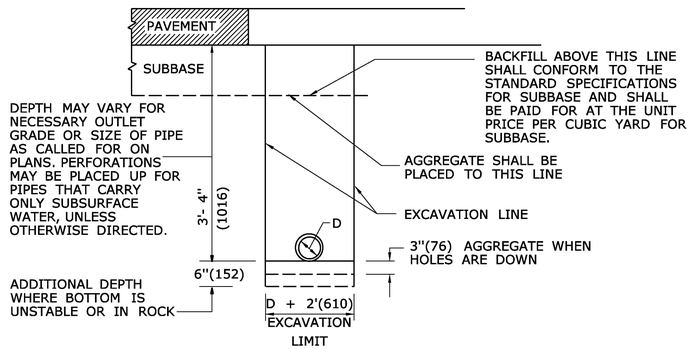

UNDERDRAIN OUTLET DETAILS

UNDERDRAIN

ALL METRIC DIMENSIONS ARE IN MILLIMETERS (mm) UNLESS OTHERWISE NOTED

REV.	DATE	REVISION DESCRIPTION
1	6/01/10	REMOVED RODENT SCREEN DETAILS AND REVISED TITLES
-	-	-
-	-	-
-	-	-
-	-	-
-	-	-

THE INFORMATION, INCLUDING ESTIMATED QUANTITIES OF WORK, SHOWN ON THESE SHEETS IS BASED ON LIMITED INVESTIGATIONS BY THE STATE AND IS IN NO WAY WARRANTED TO INDICATE THE CONDITIONS OF ACTUAL QUANTITIES OF WORK WHICH WILL BE REQUIRED.

Plotted Date: 5/21/2010

NOT TO SCALE

STATE OF CONNECTICUT
DEPARTMENT OF TRANSPORTATION

Filename: CTDOT_HIGHWAY_STD.dgn Model: HW-751_01

SUBMITTED BY: NAME/DATE/TIME:
Leo Fontaine
2010.05.28 10:27:49 -04'00'

APPROVED BY: NAME/DATE/TIME:
James H. Norman
Digitally signed by James H. Norman
DN: c=US, st=CT, l=Newington, ou=Department of Transportation, email=james.norman@ct.gov, o=State of Connecticut, cn=James H. Norman
Date: 2010.06.04 08:19:46 -04'00'

CTDOT
STANDARD SHEET

OFFICE OF ENGINEERING

STANDARD SHEET TITLE:
UNDERDRAINS AND UNDERDRAIN OUTLETS

STANDARD SHEET NO.:
HW-751_01

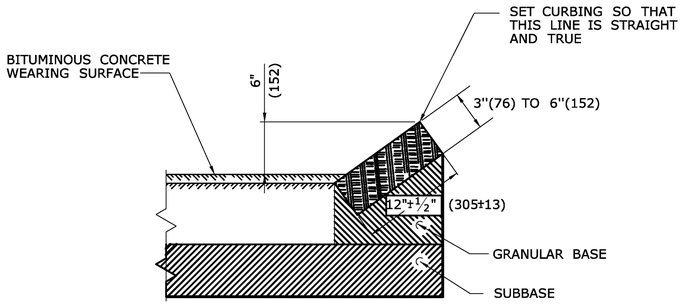

TYPICAL SECTION SHOWING SLOPE CURBING SET ADJACENT TO BITUMINOUS CONCRETE SURFACES

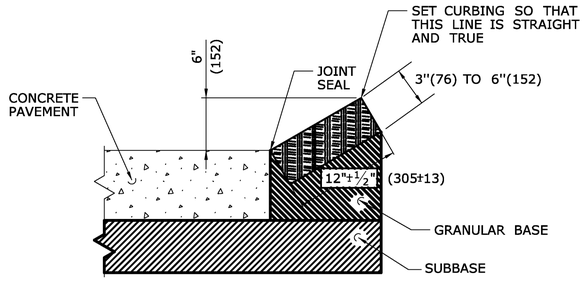

TYPICAL SECTION SHOWING SLOPE CURBING SET ADJACENT TO CONCRETE SURFACES

NOTE:

1. ALL CONSTRUCTION DIMENSIONS ARE NOMINAL.

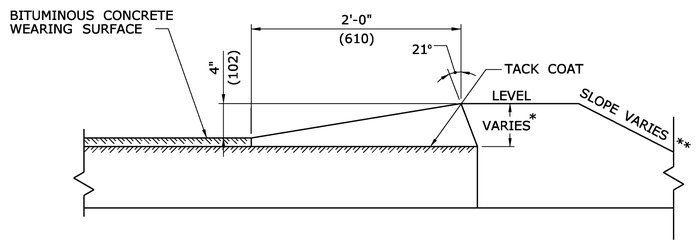

* THIS DIMENSION VARIES WITH THE THICKNESS OF THE TOP COURSE AND SLOPE OF SHOULDER.

** SEE TYPICAL SECTIONS FOR PROJECT. IN FILL AREAS 2'(610) LEVEL BEHIND THE CURB IS REQUIRED.

BITUMINOUS CONCRETE BERM

GRANITE SLOPE CURBING

½"(13) MORTAR JOINT REQUIRED

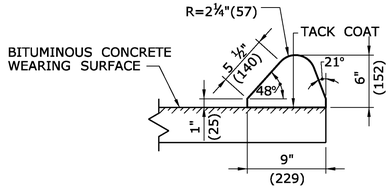

6"(150) BITUMINOUS CONCRETE LIP CURBING

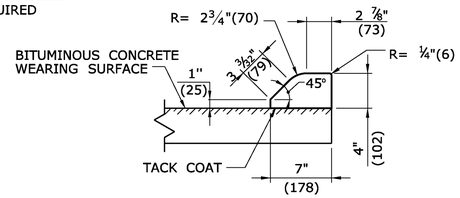

4"(100) BITUMINOUS CONCRETE PARK CURBING

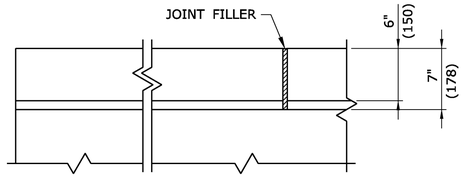

PLAN

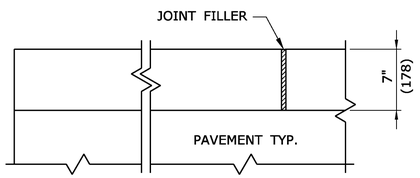

PLAN

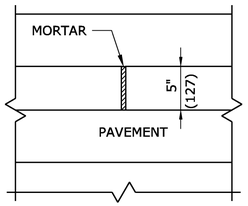

PLAN

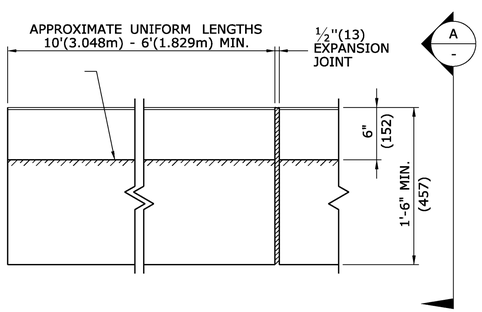

ELEVATION

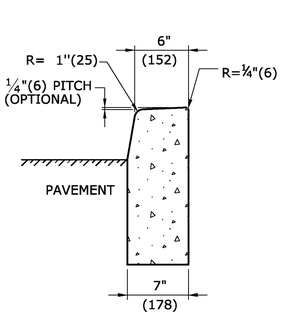

SECTION A -

6" (150) CONCRETE CURBING

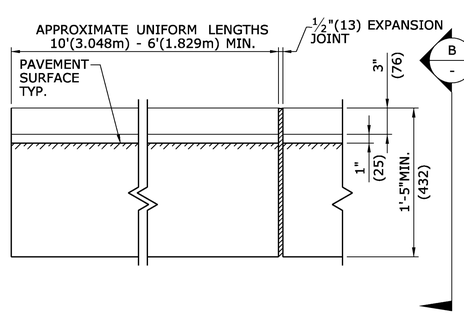

ELEVATION

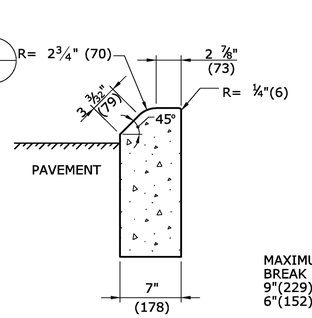

SECTION B -

4"(100) CONCRETE PARK CURBING

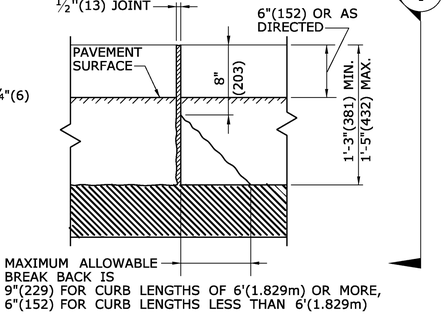

ELEVATION

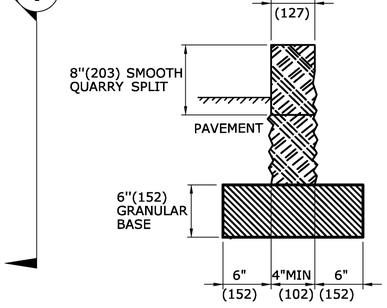

SECTION C -

STONE CURBING

ALL METRIC DIMENSIONS ARE IN MILLIMETERS (mm) UNLESS OTHERWISE NOTED

REV.	DATE	REVISION DESCRIPTION
-	-	-
-	-	-
-	-	-
-	-	-
-	-	-
1	6/01/10	REVISED TItLE FOR 6" CONC. CURB

THE INFORMATION, INCLUDING ESTIMATED QUANTITIES OF WORK, SHOWN ON THESE SHEETS IS BASED ON LIMITED INVESTIGATIONS BY THE STATE AND IS IN NO WAY WARRANTED TO INDICATE THE CONDITIONS OF ACTUAL QUANTITIES OF WORK WHICH WILL BE REQUIRED.

Plotted Date: 5/21/2010

NOT TO SCALE

STATE OF CONNECTICUT
DEPARTMENT OF TRANSPORTATION

Filename: CTDOT_HIGHWAY_STD.dgn Model: HW-811_01

SUBMITTED BY: NAME/DATE/TIME: Leo Fontaine 2010.05.28 10:28:25 -04'00'

APPROVED BY: NAME/DATE/TIME: James H. Norman Digitally signed by James H. Norman DN: cn=JS, o=CT, l=Hewington, ou=Department of Transportation, email=james.norman@ct.gov, o=State ofConnecticut, cn=James H. Norman Date: 2010.06.04 08:20:32 -04'00'

CTDOT STANDARD SHEET

OFFICE OF ENGINEERING

STANDARD SHEET TITLE: CURBING

STANDARD SHEET NO.: HW-811_01

GENERAL NOTES:

1. ALTERNATE DESIGNS FOR LIFTING KEYS, HOLES OR OTHER HANDLING DEVICES MAY BE SUBMITTED TO THE ENGINEER FOR APPROVAL.
2. MATERIALS SHALL CONFORM TO THE DEPARTMENT'S STANDARD SPECIFICATIONS AND SUPPLEMENTALS.

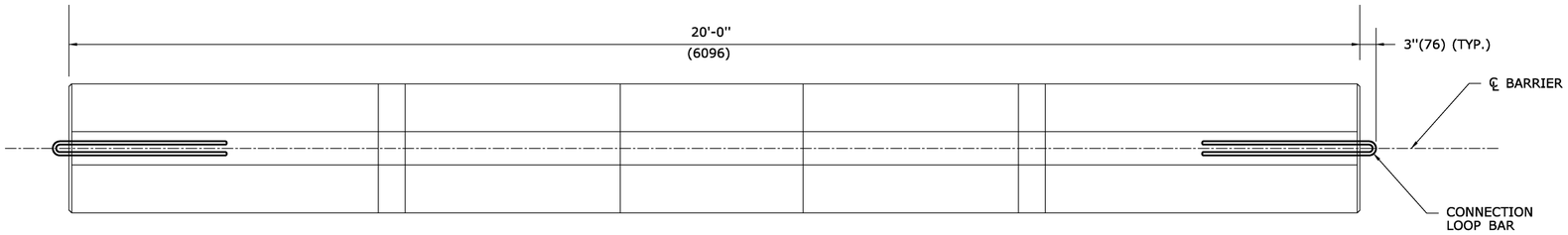

PLAN

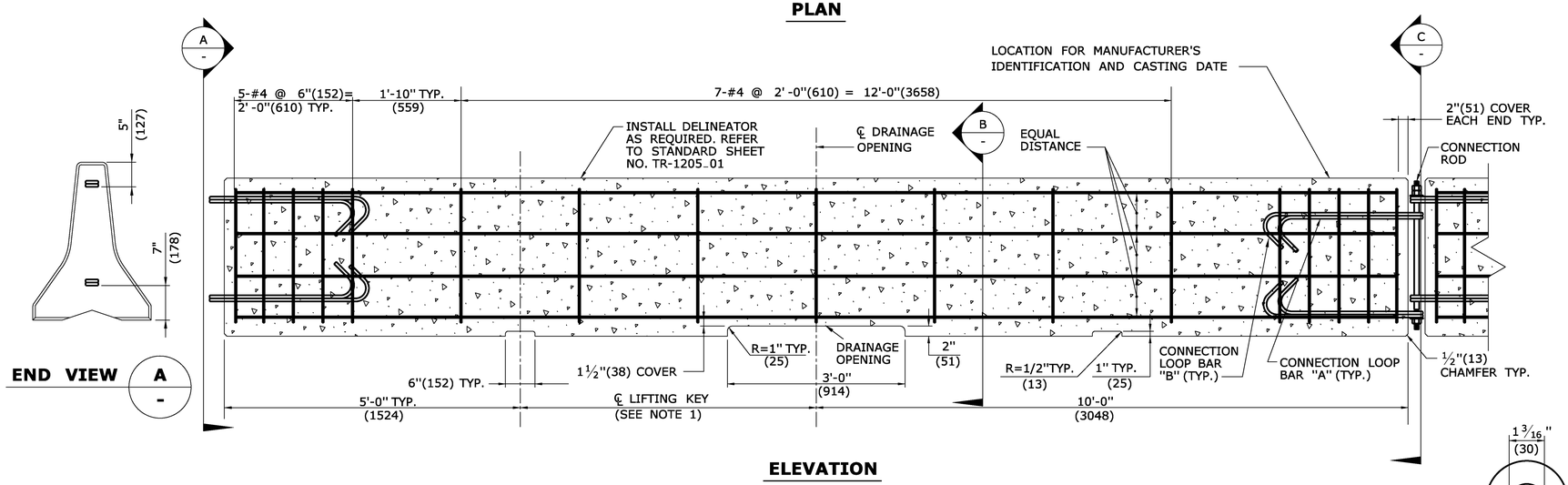

ELEVATION

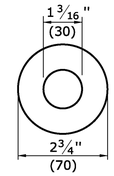

WASHER DETAIL

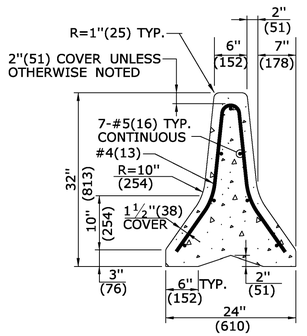

SECTION B -

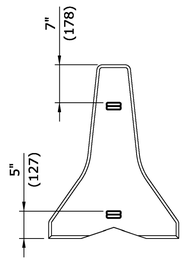

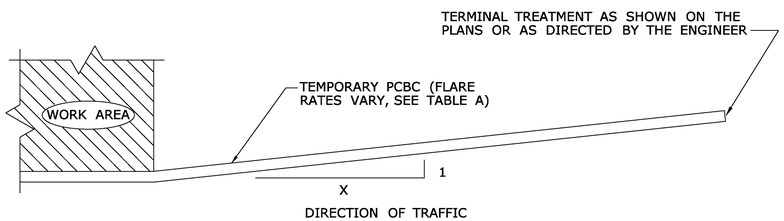

PLAN - TYPICAL INSTALLATION

TABLE A

FLARE RATES

* SPEED	FLARE RATE (X : 1)
≤ 30MPH(48KPH)	4 : 1
> 30MPH(48KPH) <45MPH(72KPH)	6 : 1
≥ 45MPH(72KPH) NON-LIMITED ACCESS HIGHWAYS	8 : 1
ALL LIMITED ACCESS HIGHWAYS	10 : 1

* DESIGN SPEED THROUGH THE WORK AREA.

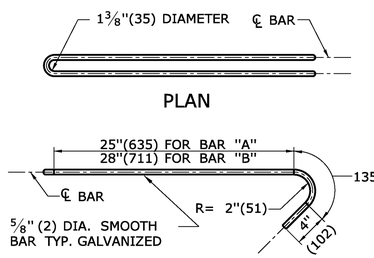

ELEVATION

BAR "A" = 6'-0"(1829) TOTAL
BAR "B" = 6'-6"(1981) TOTAL

CONNECTION LOOP BAR

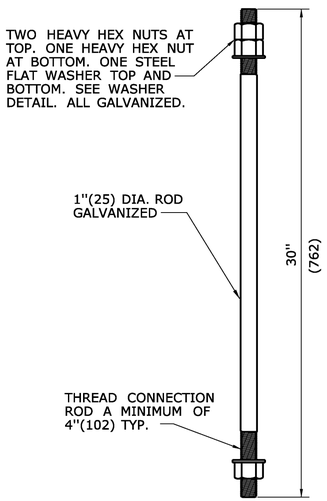

CONNECTION ROD

ALL METRIC DIMENSIONS ARE IN MILLIMETERS (mm) UNLESS OTHERWISE NOTED

REV.	DATE	REVISION DESCRIPTION
-	-	-
-	-	-
-	-	-
-	-	-
-	-	-
-	-	-

THE INFORMATION, INCLUDING ESTIMATED QUANTITIES OF WORK, SHOWN ON THESE SHEETS IS BASED ON LIMITED INVESTIGATIONS BY THE STATE AND IS IN NO WAY WARRANTED TO INDICATE THE CONDITIONS OF ACTUAL QUANTITIES OF WORK WHICH WILL BE REQUIRED.

Plotted Date: 9/11/2009

NOT TO SCALE

STATE OF CONNECTICUT
DEPARTMENT OF TRANSPORTATION

Filename: CTDOT_HIGHWAY_STD.dgn Model: HW-822_01

SUBMITTED BY:	NAME/DATE/TIME:
	Timothy M. Wilson 2009.09.16 11:22:25 -04'00'
APPROVED BY:	NAME/DATE/TIME:
	James H. Norman 2009.09.18 14:27:56 -04'00'

CTDOT STANDARD SHEET

OFFICE OF ENGINEERING

STANDARD SHEET TITLE:

TEMPORARY PRECAST CONCRETE BARRIER CURB

STANDARD SHEET NO.:

HW-822_01

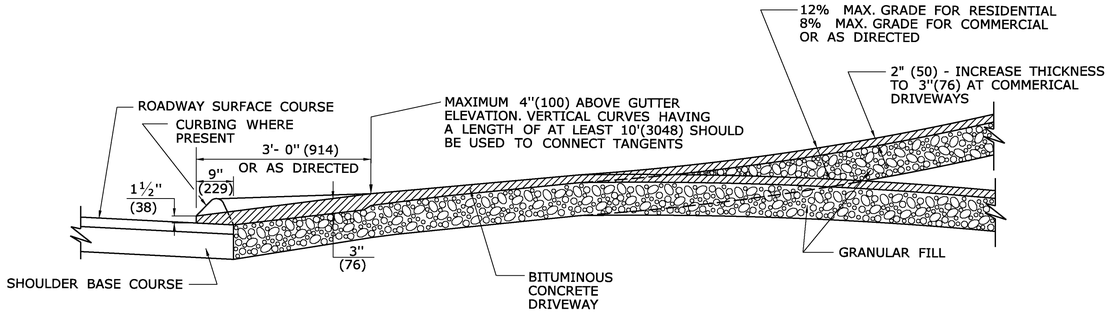

SECTION A

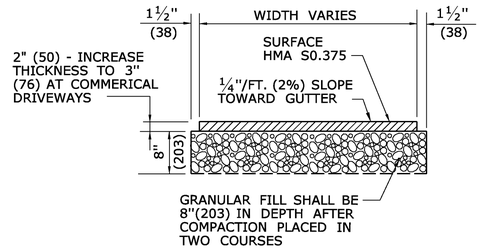

TYPICAL SECTION BITUMINOUS CONCRETE SIDEWALK AND DRIVE

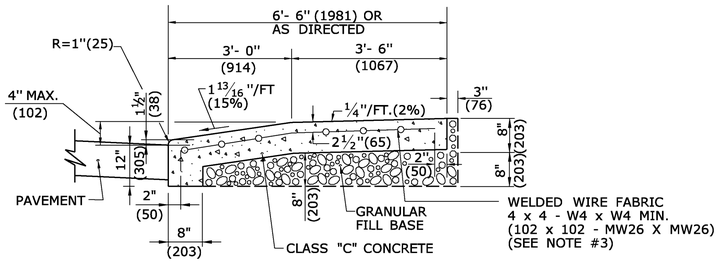

SECTION B

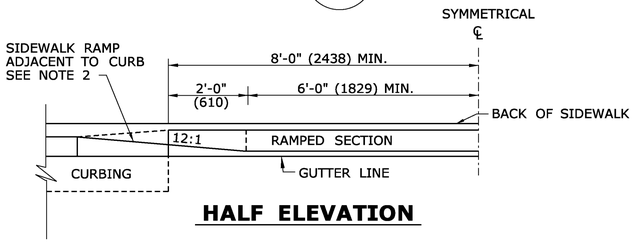

HALF ELEVATION

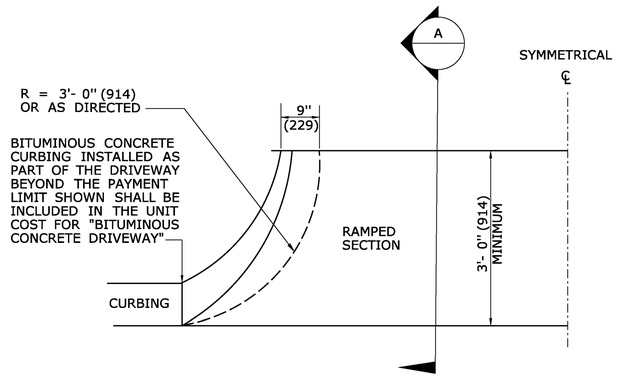

HALF BITUMINOUS CONCRETE DRIVEWAY PLAN

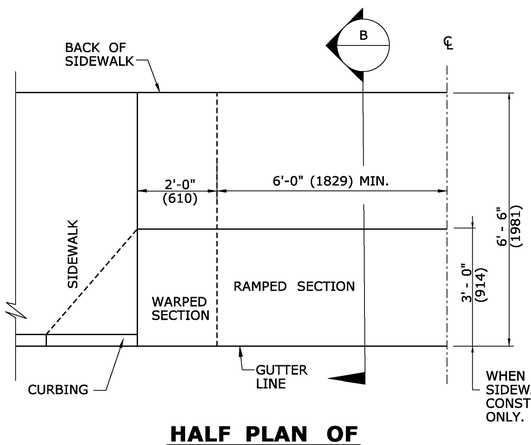

HALF PLAN OF CONCRETE DRIVEWAY RAMP WHERE SIDEWALK ADJOINS CURBING

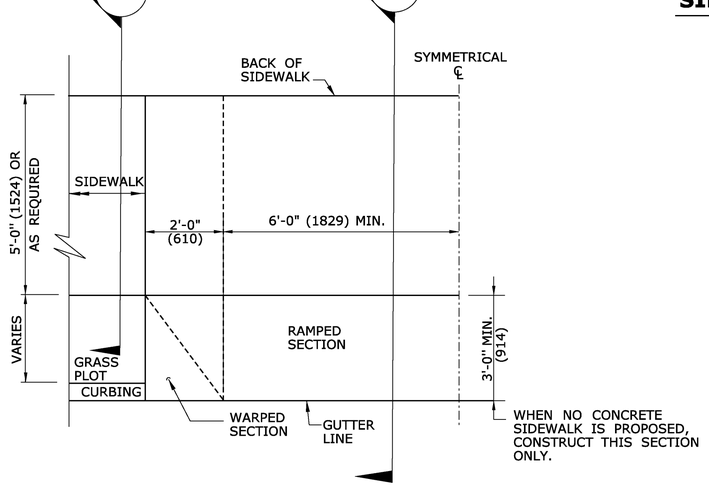

HALF PLAN OF CONCRETE DRIVEWAY RAMP WHERE CURB IS SEPARATED FROM SIDEWALK BY GRASS PLOT

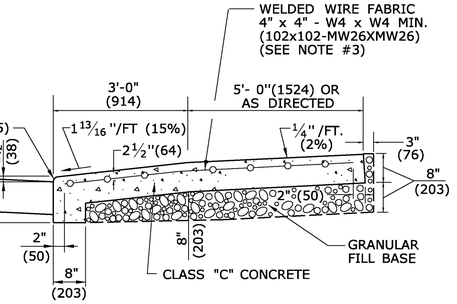

SECTION C

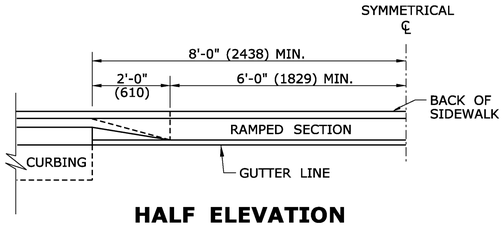

HALF ELEVATION

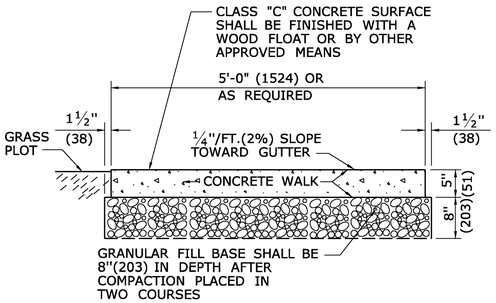

SECTION D

5' (1524) WIDE CONCRETE SIDEWALK WITH GRASS PLOT

GENERAL NOTES:

1. DRIVEWAY ENTRANCE SHALL BE A MINIMUM OF 12' (3658) WIDE, EXCLUDING CURBING WHEN PRESENT.
2. SIDEWALK RAMPS SHALL BE A MINIMUM OF 36" (914) TO 40" (1016) MAXIMUM, WITH A MAXIMUM SLOPE OF 12:1. THERE SHALL BE NO LIP AT THE DRIVEWAY SIDEWALK INTERFACE.
3. WELDED WIRE FABRIC MATS WITH REINFORCING AT CLOSER SPACING MAY BE USED.

ALL METRIC DIMENSIONS ARE IN MILLIMETERS (mm) UNLESS OTHERWISE NOTED

REV.	DATE	REVISION DESCRIPTION
1	6/01/10	REVISED BORDER TITLE
2	6/01/10	REVISED HALF ELEVATION DETAILS
-	-	-
-	-	-
-	-	-
-	-	-

THE INFORMATION, INCLUDING ESTIMATED QUANTITIES OF WORK, SHOWN ON THESE SHEETS IS BASED ON LIMITED INVESTIGATIONS BY THE STATE AND IS IN NO WAY WARRANTED TO INDICATE THE CONDITIONS OF ACTUAL QUANTITIES OF WORK WHICH WILL BE REQUIRED.

Plotted Date: 5/21/2010

NOT TO SCALE

STATE OF CONNECTICUT
DEPARTMENT OF TRANSPORTATION

Filename: CTDOT_HIGHWAY_STD.dgn Model: HW-921_01

SUBMITTED BY: NAME/DATE/TIME: Leo Fontaine 2010.05.28 10:29:33 -04'00'

APPROVED BY: NAME/DATE/TIME: James H. Norman

Digitally signed by James H. Norman
DN: c=US, st=CT, l=Newington, ou=Department of Transportation, email=james.norman@ct.gov, o=State of Connecticut, cn=James H. Norman
Date: 2010.06.04 08:22:04 -04'00'

CTDOT STANDARD SHEET

OFFICE OF ENGINEERING

STANDARD SHEET TITLE: DRIVEWAY RAMPS AND SIDEWALKS

STANDARD SHEET NO.: HW-921_01

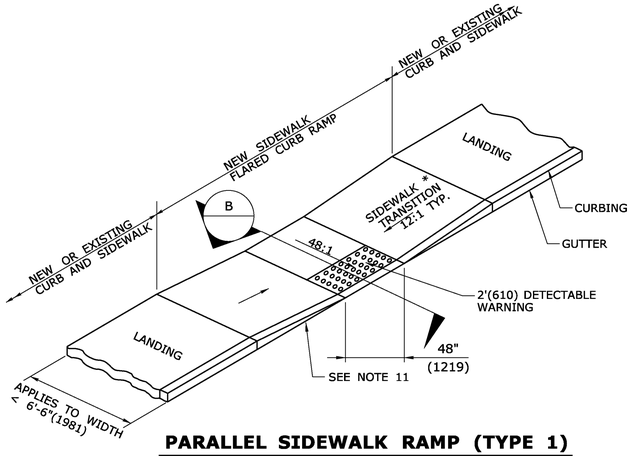

PARALLEL SIDEWALK RAMP (TYPE 1)

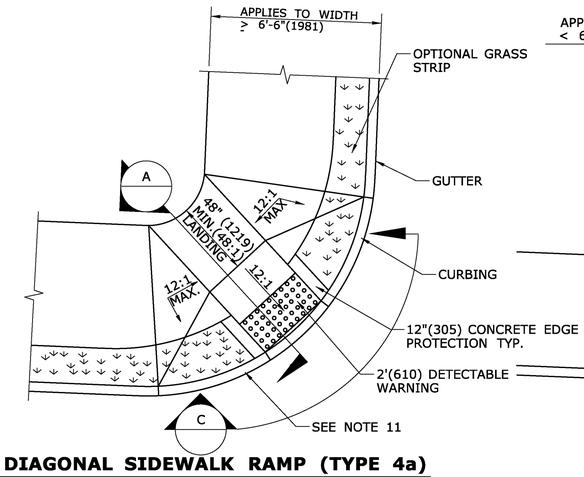

DIAGONAL SIDEWALK RAMP (TYPE 4a)

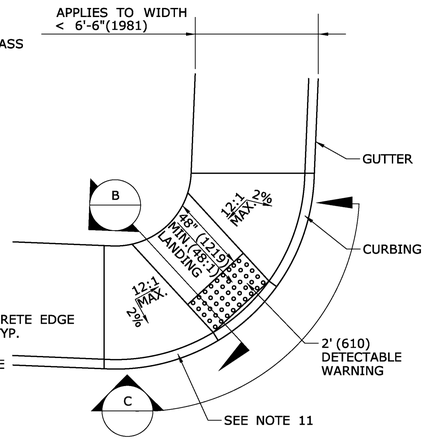

DIAGONAL/PARALLEL SIDEWALK RAMP (TYPE 4b)

GENERAL NOTES:

1. MAXIMUM SLOPES OF ADJOINING GUTTERS AND ROAD SURFACES IMMEDIATELY ADJACENT TO THE SIDEWALK RAMP OR ACCESSIBLE ROUTE SHOULD NOT EXCEED 20:1.
2. CARE SHALL BE TAKEN TO ASSURE UNIFORM GRADE ON THE RAMP, FREE OF SAGS AND ABRUPT GRADE CHANGES.
3. ALL RAMPS SHALL BE CONSTRUCTED OF CLASS "C" CONCRETE IN ACCORDANCE WITH CONNECTICUT STANDARD SPECIFICATIONS ARTICLE M.03.01.
4. SIDEWALK RAMPS SHALL HAVE A COARSE BROOM FINISH TRANSVERSE TO THE SLOPE OF THE RAMP.
5. DIAGONAL SIDEWALK RAMPS AT MARKED CROSSINGS SHALL BE WHOLLY CONTAINED WITHIN THE MARKINGS, EXCLUDING ANY FLARED SIDES.
6. REMOVAL OF EXISTING SIDEWALK FOR NEW RAMP INSTALLATIONS SHALL BE TO THE NEAREST EXPANSION / CONTRACTION JOINT OR DUMMY JOINT. 12:1 MAY NOT BE ACHIEVABLE DUE TO SIDEWALK GRADE. IN RECOGNITION OF THIS, A MINIMUM LIMIT OF 15' (4.57m) FOR A PARALLEL RAMP SHALL BE USED. REMOVAL SHALL NOT BE FURTHER THAN 2' (610) FROM THE PROPOSED RAMP UNLESS DIRECTED BY THE ENGINEER. SAW CUT REQUIRED FOR DUMMY JOINTS SHALL BE INCLUDED IN THE COST OF "CONCRETE SIDEWALK".
7. EXPANSION JOINTS IN CONCRETE SHALL MATCH THOSE IN ADJACENT SIDEWALKS BUT IN NO CASE SHALL THE SPACING BETWEEN EXPANSION JOINTS EXCEED 12' (3.66m) UNLESS OTHERWISE NOTED.
8. RAISED MEDIAN ISLANDS IN MARKED CROSSINGS SHALL HAVE SIDEWALK RAMPS AT BOTH SIDES AND A LEVEL AREA AT LEAST 4' (1219) LONG BETWEEN THE RAMPS. IF THIS CAN NOT BE ACHIEVED, THE RAISED ISLAND SHALL BE CUT THROUGH LEVEL WITH THE ROADWAY AS SHOWN ON THE PLANS OR AS DIRECTED BY THE ENGINEER.
9. SIDEWALK RAMPS, WHEN CONSTRUCTED IN CONJUNCTION WITH SIDEWALK, SHALL BE PAID FOR UNDER THE ITEM "CONCRETE SIDEWALK", INCLUDING CURBING WITHIN THE LIMITS OF THE NEW SIDEWALK RAMP AND DETECTABLE WARNING STRIPS.WHEN JUST A SIDEWALK RAMP IS CONSTRUCTED, IT SHALL BE PAID FOR UNDER THE ITEM "SIDEWALK RAMP" INCLUDING CURBING WITHIN THE LIMITS OF THE NEW SIDEWALK AND DETECTABLE WARNING STRIP.
10. CURBING WITHIN THE LIMITS OF THE NEW SIDEWALK RAMP SHALL BE CONSTRUCTED IN CONFORMANCE WITH THE REQUIREMENTS OF FORM 816 SECTIONS 8.11 AND 8.13.
11. TRANSITION TO FULL HEIGHT CURB. INSTALL STONE CURBING IF ADJACENT CURBING IS STONE. INSTALL CONCRETE CURBING IF ADJACENT CURBING IS CONCRETE OR BITUMINOUS.
12. INSTALL THE EDGE OF THE DETECTABLE WARNING STRIP 6" (152) FROM THE EDGE OF ROAD.
13. TO PERMIT WHEELCHAIR WHEELS TO ROLL BETWEEN DOMES, ALIGN DOMES ON A SQUARE GRID IN THE DIRECTION OF PEDESTRIAN TRAVEL.

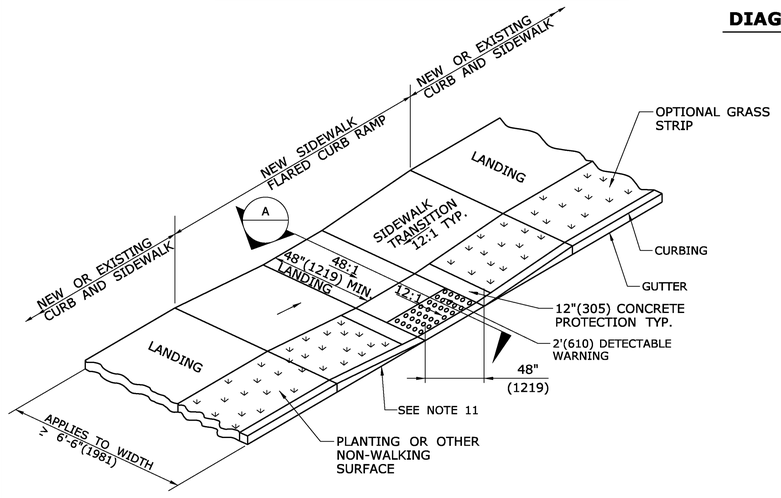

PERPENDICULAR SIDEWALK RAMP (TYPE 2)

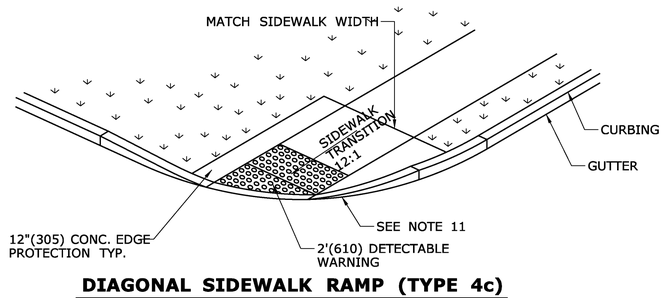

DIAGONAL SIDEWALK RAMP (TYPE 4c)

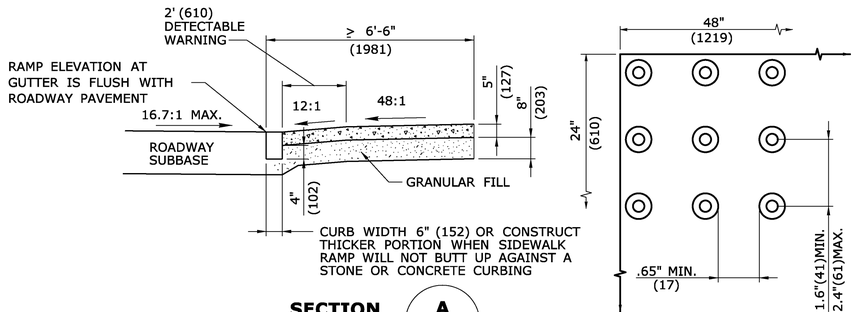

SECTION A

DOME SPACING

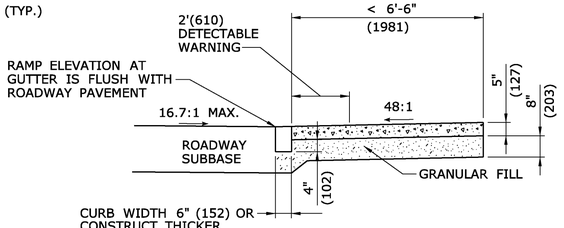

SECTION B

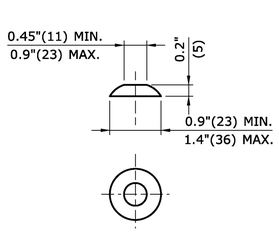

DOME SECTION

DETECTABLE WARNINGS AT MEDIAN ISLAND

SEE NOTE 8

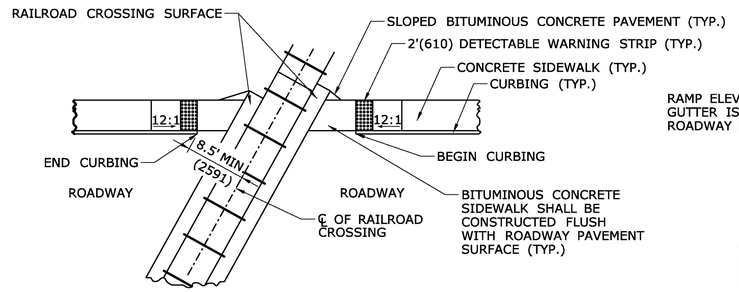

PLAN VIEW

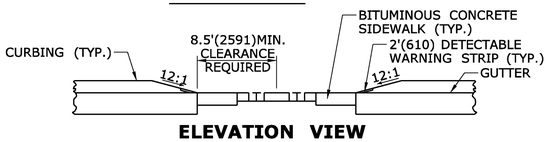

ELEVATION VIEW

DETECTABLE WARNINGS AT RAILROAD CROSSING

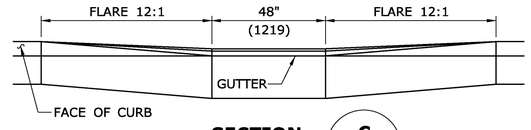

SECTION C

ALL METRIC DIMENSIONS ARE IN MILLIMETERS (mm) UNLESS OTHERWISE NOTED

REV.	DATE	REVISION DESCRIPTION
-	-	-
-	-	-
-	-	-
-	-	-
-	-	-
1	10/10	Revised Note 4 and removed note 11

THE INFORMATION, INCLUDING ESTIMATED QUANTITIES OF WORK, SHOWN ON THESE SHEETS IS BASED ON LIMITED INVESTIGATIONS BY THE STATE AND IS IN NO WAY WARRANTED TO INDICATE THE CONDITIONS OF ACTUAL QUANTITIES OF WORK WHICH WILL BE REQUIRED.

Plotted Date: 10/8/2010

NOT TO SCALE

STATE OF CONNECTICUT
DEPARTMENT OF TRANSPORTATION

Filename: CTDOT_HIGHWAY_STD.dgn Model: 68 - HW-921_02

SUBMITTED BY: NAME/DATE/TIME:
Digitally signed by Leo Fontaine
DN: c=US, o=Connecticut, l=Hemington, ou=Department of Transportation, email=Leo.Fontaine@ct.gov, o=State of Connecticut, cn=Leo Fontaine
Date: 2010.10.06 10:46:15 -04'00'

APPROVED BY: NAME/DATE/TIME:
James H. Norman
Digitally signed by James H. Norman
DN: c=US, st=CT, l=Hemington, ou=Department of Transportation, email=James.norman@ct.gov, o=State of Connecticut, cn=James H. Norman
Date: 2010.10.18 09:06:51 -04'00'

CTDOT STANDARD SHEET

OFFICE OF ENGINEERING

STANDARD SHEET TITLE:

SIDEWALK RAMPS

STANDARD SHEET NO.:

HW-921_02