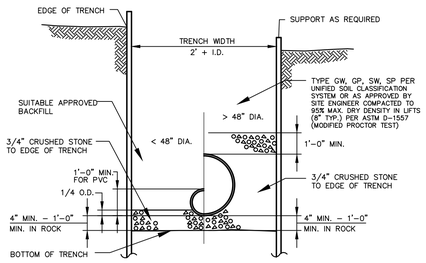

TYPICAL STORM SEWER TRENCH SECTION

N.T.S. BLDD-004

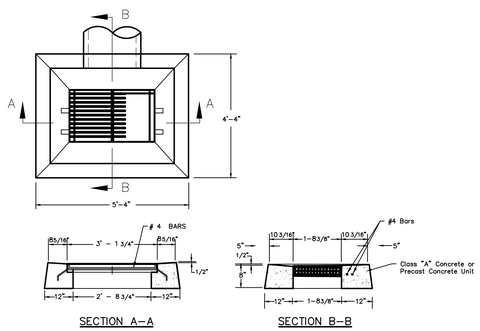

TYPE "C-L" CATCH BASIN TOP

NTS

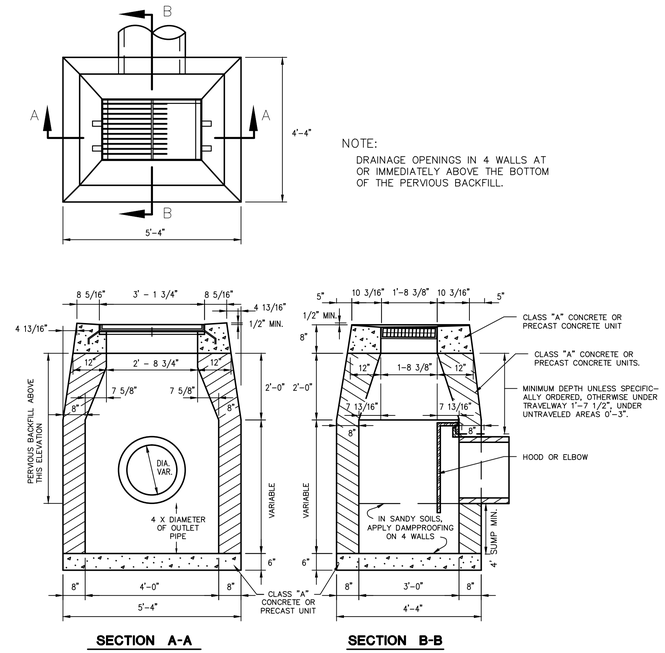

TYPE "C-L" CATCH BASIN WITH HOOD

N.T.S. CTDD-002

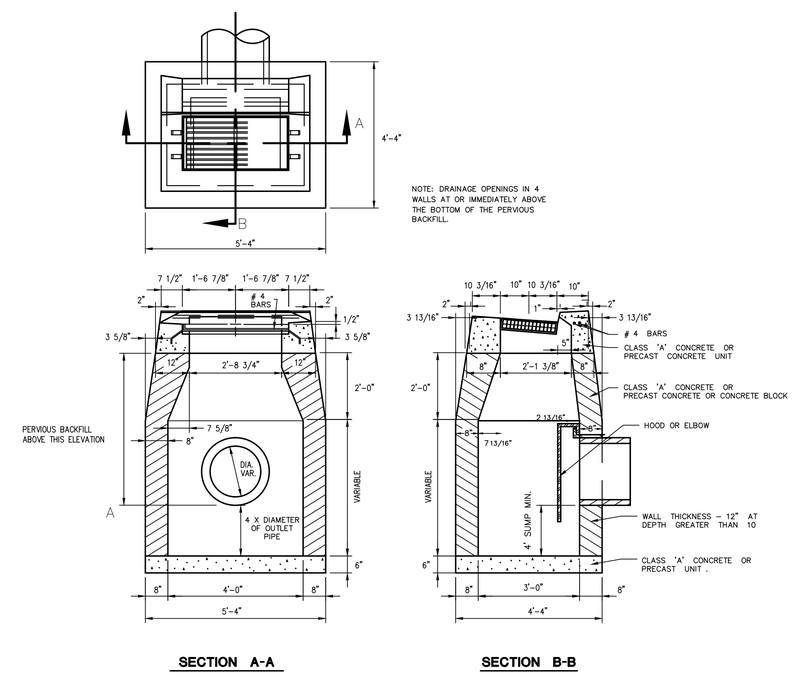

CONNECTICUT DEPARTMENT OF TRANSPORTATION

TYPE "C" CATCH BASIN WITH HOOD

N.T.S. CTDD-001

BL Companies

ARCHITECTURE
ENGINEERING
ENVIRONMENTAL
LAND SURVEYING

355 Research Parkway
Meriden, CT 06450
(203) 630-1406
(203) 630-2615 Fax

STORRS CENTER - PHASE 4
STORRS ROAD (ROUTE 195)
STORRS-MANSFIELD, CONNECTICUT

FOR PERMITTING PURPOSES ONLY
NOT FOR CONSTRUCTION

REVISIONS
No. Date Desc.

Designed	J.J.U.
Drawn	N.G.Y
Checked	
Approved	
Scale	AS SHOWN
Project No.	03C667-X
Date	2013.03.08
CAD File:	DN03C667X01

Title
SITE DETAILS

Sheet No.
DN-4

Xref (s): : BD03C667X02

7/26/2012 2:13 PM, EDLADY, K:\ABS03\03067\DWG\DN03C667DWG2N-4 24X36 NTS.

©2013 BL COMPANIES, INC. THESE DRAWINGS SHALL NOT BE UTILIZED BY ANY PERSON, FIRM OR CORPORATION WITHOUT THE SPECIFIC WRITTEN PERMISSION OF BL COMPANIES.