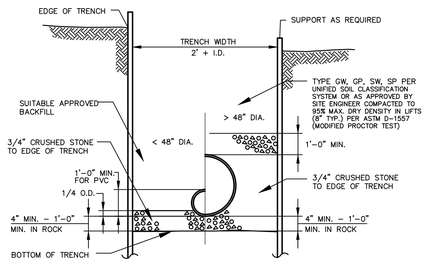

TYPICAL STORM SEWER TRENCH SECTION

N.T.S. BLDD–004

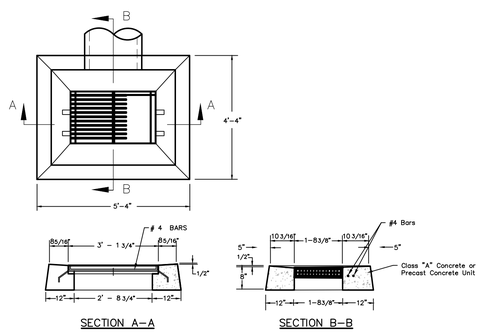

TYPE "C-L" CATCH BASIN TOP

NTS

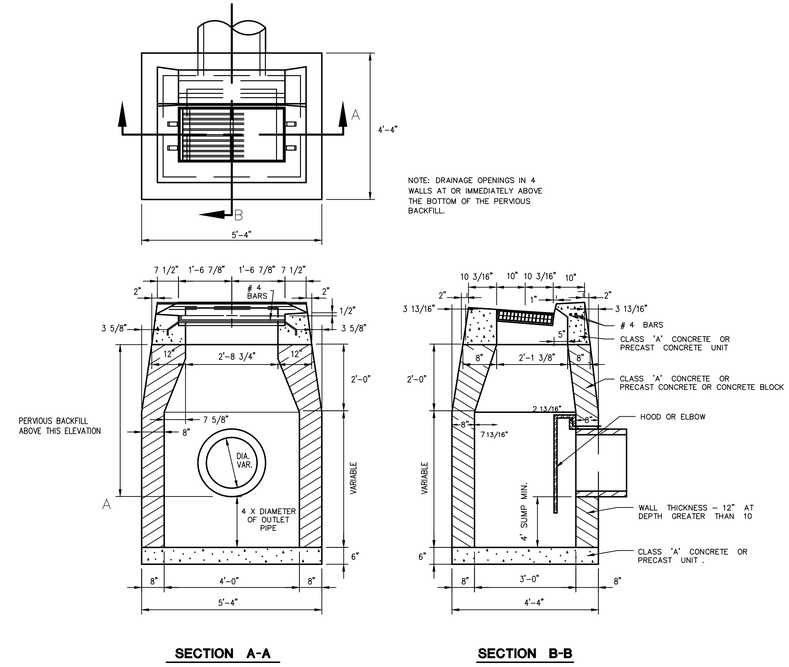

SECTION A-A SECTION B-B

CONNECTICUT DEPARTMENT OF TRANSPORTATION

TYPE "C" CATCH BASIN WITH HOOD

N.T.S. CTDD–001

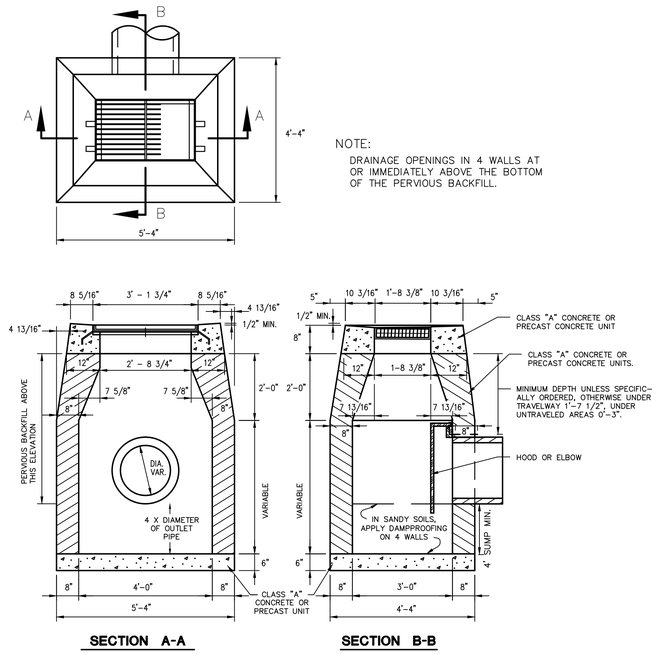

TYPE "C-L" CATCH BASIN WITH HOOD

N.T.S. CTDD–002

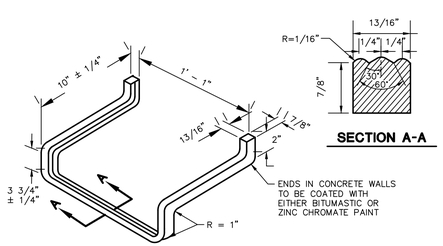

NOTE : STEPS TO BE FORGED ALUMINUM

STANDARD MANHOLE STEP

N.T.S. BLSS–005

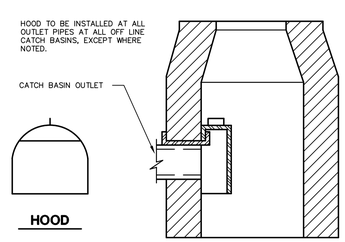

NOTE:
NEENAH – R–3711 OR EQUAL

HOODED OUTLET

N.T.S. CTDD–004

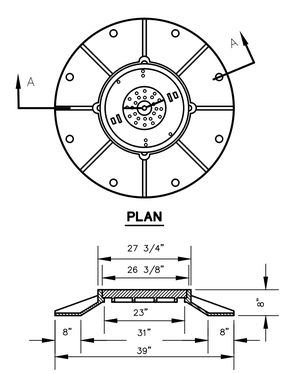

NOTE:
FRAME & GRATE TO BE CAMPBELL FOUNDRY COMPANY–PATTERN NUMBER 1221 WITHOUT COVER VENT HOLES

STANDARD STORM MANHOLE FRAME AND COVER

N.T.S BLSS–002

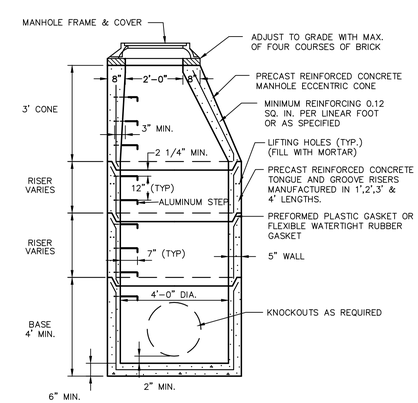

5' OR 6' DIA. PRECAST BASES MAY BE USED WHEN REQUIRED DUE TO SIZE OR NUMBER OF PIPES AT THE MANHOLE. PRECAST REDUCERS WILL BE PLACED ABOVE THE 5' & 6' BASES AS DIRECTED BY THE ENGINEER. WALL THICKNESS TO INCREASE 1" FOR EACH 1' OF INSIDE DIAMETER INCREASE.

PRECAST STORM MANHOLE DETAIL

N.T.S. CTDD–003

BL Companies
ARCHITECTURE
ENGINEERING
ENVIRONMENTAL
LAND SURVEYING

355 Research Parkway
Meriden, CT 06450
(203) 630-1406
(203) 630-2615 Fax

STORRS CENTER - PHASE 1C
STORRS ROAD (ROUTE 195)
STORRS-MANSFIELD, CONNECTICUT

PROGRESS PRINT
NOT FOR CONSTRUCTION

REVISIONS
No. Date Desc.

Designed	J.J.U.
Drawn	N.G.Y
Checked	
Approved	
Scale	AS SHOWN
Project No.	03C667A0
Date	03/15/2013
CAD File:	DN03C667A001

Title
SITE DETAILS

Sheet No.
DN-3

©2013 BL COMPANIES, INC. THESE DRAWINGS SHALL NOT BE UTILIZED BY ANY PERSON, FIRM OR CORPORATION WITHOUT THE SPECIFIC WRITTEN PERMISSION OF BL COMPANIES.

3/14/2013, EZELADNY, K:\JOBS03\03C667\DWG\DN03C667A001.DWG,DN-3 24X36 NTS.
Xref (s): : B03C667A001