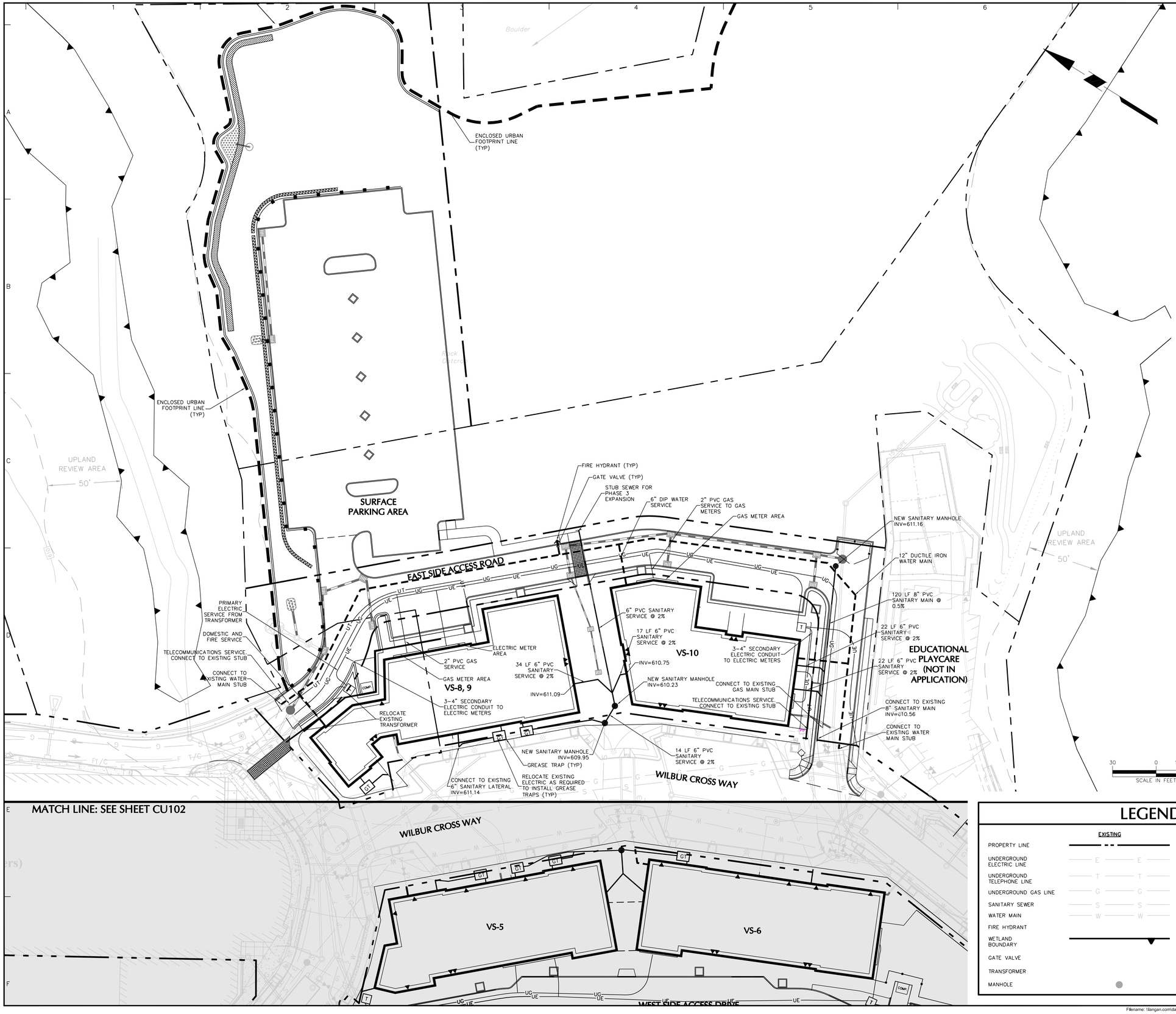

GENERAL NOTES

1. EXISTING BOUNDARY, TOPOGRAPHIC, AND OWNERSHIP INFORMATION TAKEN FROM PLAN TITLED "PHASE 2 COMPILED BASE MAP" DATED JANUARY 27, 2014, PREPARED BY BL COMPANIES.
2. THE SITE IS LOCATED IN FLOOD ZONE C, AN AREA OF MINIMAL FLOODING PER FIRM MAPS #0901280010C & #0901280005C, EFFECTIVE JANUARY 2, 1981.
3. THE SITE IS LOCATED IN ZONE SC-DD, STORRS CENTER SPECIAL DESIGN DISTRICT.

UTILITY NOTES

GENERAL:

1. ALL WATER PIPE AND ASSOCIATED INFRASTRUCTURE SHOULD BE INSTALLED PER THE UNIVERSITY OF CONNECTICUT REQUIREMENTS.
2. ALL SANITARY AND SEWER PIPE AND ASSOCIATED INFRASTRUCTURE SHOULD BE INSTALLED PER THE TOWN OF MANSFIELD PUBLIC WORKS AND WPCA STANDARDS, AND STATE HEALTH REQUIREMENTS WHERE APPLICABLE.
3. ALL ELECTRIC LINES AND ASSOCIATED INFRASTRUCTURE SHOULD BE INSTALLED PER THE NORTHEAST UTILITIES COMPANY REQUIREMENTS.
4. ALL GAS LINES AND ASSOCIATED INFRASTRUCTURE SHOULD BE INSTALLED PER CONNECTICUT NATURAL GAS REQUIREMENTS.
5. ALL TELEPHONE LINES AND ASSOCIATED INFRASTRUCTURE SHOULD BE INSTALLED PER AT&T REQUIREMENTS.
6. ALL UNDERGROUND UTILITIES MUST BE CLEARLY & PERMANENTLY MARKED.

ELECTRIC, TELEPHONE, & GAS:

7. CONTRACTOR TO COORDINATE GAS MAIN, ELECTRIC, AND TELEPHONE INSTALLATION WITH APPROPRIATE UTILITY COMPANIES.
8. CONTRACTOR SHALL MAINTAIN A MINIMUM OF 2 FEET OF COVER FOR ALL UNDERGROUND ELECTRIC, TELEPHONE AND GAS UTILITIES.

WATER & SANITARY:

9. THE CONTRACTOR MUST VERIFY THE LOCATION, SIZE, AND SERVICEABILITY OF THE EXISTING WATER MAINS PRIOR TO BEGINNING ANY SITE OR BUILDING CONSTRUCTION.
10. ALL JOINTS BETWEEN PVC PIPE SECTIONS AND BETWEEN PIPE AND PRECAST MANHOLES SHALL HAVE WATER-TIGHT RUBBER GASKET CONNECTIONS. ALL PVC PIPES AND FITTINGS SHALL COMPLY WITH ASTM D3034-93. ALL MAINS SHALL BE TESTED FOR LEAKAGE IN ACCORDANCE WITH THE LOW PRESSURE AIR TEST METHOD.
11. WHERE THE SANITARY SEWER LINE PASSES LESS THEN 18" BELOW THE WATER LINE, PROVIDE CONCRETE ENCASEMENT. THE LENGTH OF THE ENCASEMENT TO BE INCREASED TO THE NEAREST JOINT.
12. WHERE THE SANITARY SEWER LINE PASSES ABOVE THE WATER LINES, ENCASE SEWER IN 6" THICK CONCRETE FOR A DISTANCE OF 10 FEET ON EACH SIDE OF THE CROSSING, OR SUBSTITUTE RUBBER GASKETED PRESSURE PIPE FOR THE PIPE BEING USED FOR THE SAME DISTANCE.
13. CONTRACTOR SHALL MAINTAIN A MINIMUM OF 4.5 FEET OF COVER FOR ALL WATER DISTRIBUTION PIPING OR DEEPER IF REQUIRED BY WATER COMPANY.
14. THRUST BLOCKS SHALL BE PROVIDED AT ALL TEES, ELBOWS AND PLUGS.
15. ALL NEW WATER LINES SHALL BE PRESSURE TESTED AND LEAKAGE TESTED IN ACCORDANCE WITH THE LATEST EDITION OF AWWA STANDARD C600.
16. ALL NEW WATER MAINS SHALL BE DISINFECTED IN ACCORDANCE WITH AWWA STANDARD C651.
17. ALL PIPES USED FOR WATER MAINS MUST BE CEMENT LINED, DUCTILE IRON.
18. ALL DETAILS OF ELECTRIC & TELEPHONE UTILITY SERVICE SHALL BE APPROVED BY THE APPLICABLE UTILITY COMPANY AND INSTALLED TO THEIR REQUIREMENTS AS WELL AS THOSE OF THE DIRECTOR OF PUBLIC WORKS.

LEGEND

	EXISTING	PROPOSED
PROPERTY LINE		
UNDERGROUND ELECTRIC LINE	E E	UE
UNDERGROUND TELEPHONE LINE	T T	UT
UNDERGROUND GAS LINE	G G	UG
SANITARY SEWER	S S	
WATER MAIN	W W	
FIRE HYDRANT		
WETLAND BOUNDARY		
GATE VALVE		
TRANSFORMER		T
MANHOLE		

Date	Description	No.

REVISIONS

JOHN D. PLANTE
CT PROFESSIONAL ENGINEER #19399

LANGAN
555 Long Wharf Drive, New Haven, CT 06511
T: 203.562.5771 F: 203.789.6142 www.langan.com
NEW JERSEY NEW YORK CONNECTICUT PENNSYLVANIA OHIO
VIRGINIA WASHINGTON DC FLORIDA NORTH DAKOTA CALIFORNIA
ABU DHABI ATHENS DOHA DUBAI ISTANBUL
Langan Engineering, Environmental, Surveying and Landscape Architecture, D.P.C.
Langan Engineering and Environmental Services, Inc.
Langan CT, Inc.
Langan International LLC
Collectively known as Langan

Project

STORRS CENTER PHASE II

MANSFIELD CONNECTICUT

Drawing Title

UTILITY PLAN EAST

Project No. 140105801	Drawing No. CU101
Date 4/3/14	
Scale 1"=30'	
Drawn By JRM	
Checked By TSO	

LANGAN

PROJECT No. 140105801

© 2014 Langan

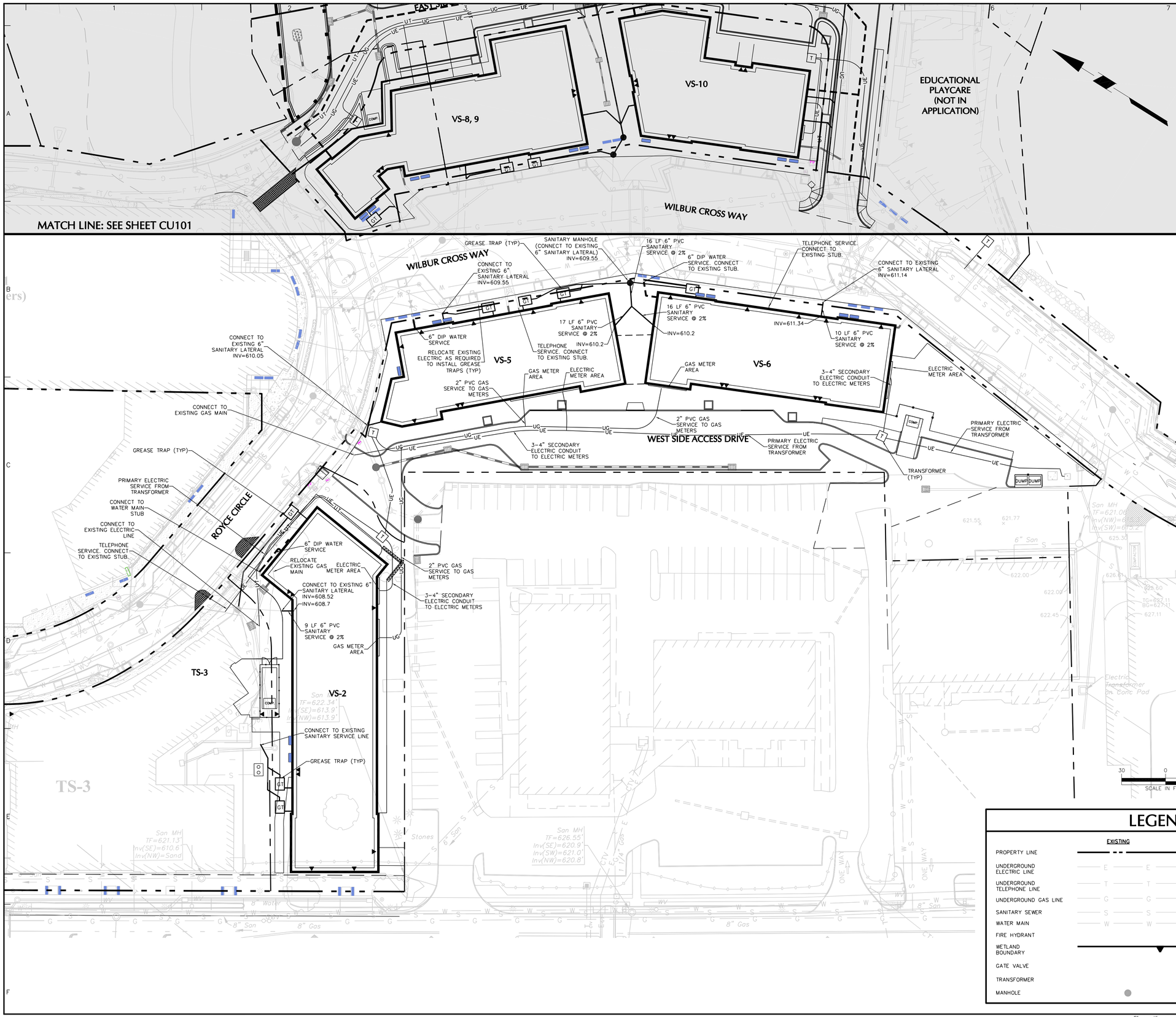

GENERAL NOTES

1. EXISTING BOUNDARY, TOPOGRAPHIC, AND OWNERSHIP INFORMATION TAKEN FROM PLAN TITLED "PHASE 2 COMPILED BASE MAP" DATED JANUARY 27, 2014, PREPARED BY BL COMPANIES.
2. THE SITE IS LOCATED IN FLOOD ZONE C, AN AREA OF MINIMAL FLOODING PER FIRM MAPS #0901280010C & #0901280005C, EFFECTIVE JANUARY 2, 1981.
3. THE SITE IS LOCATED IN ZONE SC-DD, STORRS CENTER SPECIAL DESIGN DISTRICT.

UTILITY NOTES

GENERAL:

1. ALL WATER PIPE AND ASSOCIATED INFRASTRUCTURE SHOULD BE INSTALLED PER THE UNIVERSITY OF CONNECTICUT REQUIREMENTS.
2. ALL SANITARY AND SEWER PIPE AND ASSOCIATED INFRASTRUCTURE SHOULD BE INSTALLED PER THE TOWN OF MANSFIELD PUBLIC WORKS AND WPCA STANDARDS, AND STATE HEALTH REQUIREMENTS WHERE APPLICABLE.
3. ALL ELECTRIC LINES AND ASSOCIATED INFRASTRUCTURE SHOULD BE INSTALLED PER THE NORTHEAST UTILITIES COMPANY REQUIREMENTS.
4. ALL GAS LINES AND ASSOCIATED INFRASTRUCTURE SHOULD BE INSTALLED PER CONNECTICUT NATURAL GAS REQUIREMENTS.
5. ALL TELEPHONE LINES AND ASSOCIATED INFRASTRUCTURE SHOULD BE INSTALLED PER AT&T REQUIREMENTS.
6. ALL UNDERGROUND UTILITIES MUST BE CLEARLY & PERMANENTLY MARKED.

ELECTRIC, TELEPHONE, & GAS:

7. CONTRACTOR TO COORDINATE GAS MAIN, ELECTRIC, AND TELEPHONE INSTALLATION WITH APPROPRIATE UTILITY COMPANIES.
8. CONTRACTOR SHALL MAINTAIN A MINIMUM OF 2 FEET OF COVER FOR ALL UNDERGROUND ELECTRIC, TELEPHONE AND GAS UTILITIES.

WATER & SANITARY:

9. THE CONTRACTOR MUST VERIFY THE LOCATION, SIZE, AND SERVICEABILITY OF THE EXISTING WATER MAINS PRIOR TO BEGINNING ANY SITE OR BUILDING CONSTRUCTION.
10. ALL JOINTS BETWEEN PVC PIPE SECTIONS AND BETWEEN PIPE AND PRECAST MANHOLES SHALL HAVE WATER-TIGHT RUBBER GASKET CONNECTIONS. ALL PVC PIPES AND FITTINGS SHALL COMPLY WITH ASTM D3034-93. ALL MAINS SHALL BE TESTED FOR LEAKAGE IN ACCORDANCE WITH THE LOW PRESSURE AIR TEST METHOD.
11. WHERE THE SANITARY SEWER LINE PASSES LESS THEN 18" BELOW THE WATER LINE, PROVIDE CONCRETE ENCASEMENT. THE LENGTH OF THE ENCASEMENT TO BE INCREASED TO THE NEAREST JOINT.
12. WHERE THE SANITARY SEWER LINE PASSES ABOVE THE WATER LINES, ENCASE SEWER IN 6" THICK CONCRETE FOR A DISTANCE OF 10 FEET ON EACH SIDE OF THE CROSSING, OR SUBSTITUTE RUBBER GASKETED PRESSURE PIPE FOR THE PIPE BEING USED FOR THE SAME DISTANCE.
13. CONTRACTOR SHALL MAINTAIN A MINIMUM OF 4.5 FEET OF COVER FOR ALL WATER DISTRIBUTION PIPING OR DEEPER IF REQUIRED BY WATER COMPANY.
14. THRUST BLOCKS SHALL BE PROVIDED AT ALL TEES, ELBOWS AND PLUGS.
15. ALL NEW WATER LINES SHALL BE PRESSURE TESTED AND LEAKAGE TESTED IN ACCORDANCE WITH THE LATEST EDITION OF AWWA STANDARD C600.
16. ALL NEW WATER MAINS SHALL BE DISINFECTED IN ACCORDANCE WITH AWWA STANDARD C651.
17. ALL PIPES USED FOR WATER MAINS MUST BE CEMENT LINED, DUCTILE IRON.
18. ALL DETAILS OF ELECTRIC & TELEPHONE UTILITY SERVICE SHALL BE APPROVED BY THE APPLICABLE UTILITY COMPANY AND INSTALLED TO THEIR REQUIREMENTS AS WELL AS THOSE OF THE DIRECTOR OF PUBLIC WORKS.

LEGEND

	EXISTING	PROPOSED
PROPERTY LINE		
UNDERGROUND ELECTRIC LINE	E	UE
UNDERGROUND TELEPHONE LINE	T	UT
UNDERGROUND GAS LINE	G	UG
SANITARY SEWER	S	
WATER MAIN	W	
FIRE HYDRANT		
WETLAND BOUNDARY		
GATE VALVE		
TRANSFORMER		T
MANHOLE		

Date	Description	No.

REVISIONS

JOHN D. PLANTE
CT PROFESSIONAL ENGINEER #19399

LANGAN
555 Long Wharf Drive, New Haven, CT 06511
T: 203.562.5771 F: 203.789.6142 www.langan.com
NEW JERSEY NEW YORK CONNECTICUT PENNSYLVANIA OHIO VIRGINIA WASHINGTON DC FLORIDA NORTH DAKOTA CALIFORNIA ABU DHABI ATHENS DOHA DUBAI ISTANBUL
Langan Engineering, Environmental, Surveying and Landscape Architecture, D.P.C.
Langan Engineering and Environmental Services, Inc.
Langan CT, Inc.
Langan International LLC
Collectively known as Langan

Project

STORRS CENTER PHASE II

MANSFIELD CONNECTICUT

Drawing Title

UTILITY PLAN WEST

Project No. 140105801	Drawing No. CU102
Date 4/3/2014	
Scale 1"=30'	
Drawn By JRM	
Checked By TSO	

LANGAN

PROJECT No. 140105801

©2013 Langan

Filename: \\langan.com\data\NH\data8\140105801\Cadd Data - 140105801\SheetFiles\140105801-CU101-0101.dwg Date: 4/3/2014 Time: 11:05 User: tonderko Style Table: Langan.stb Layout: WEST

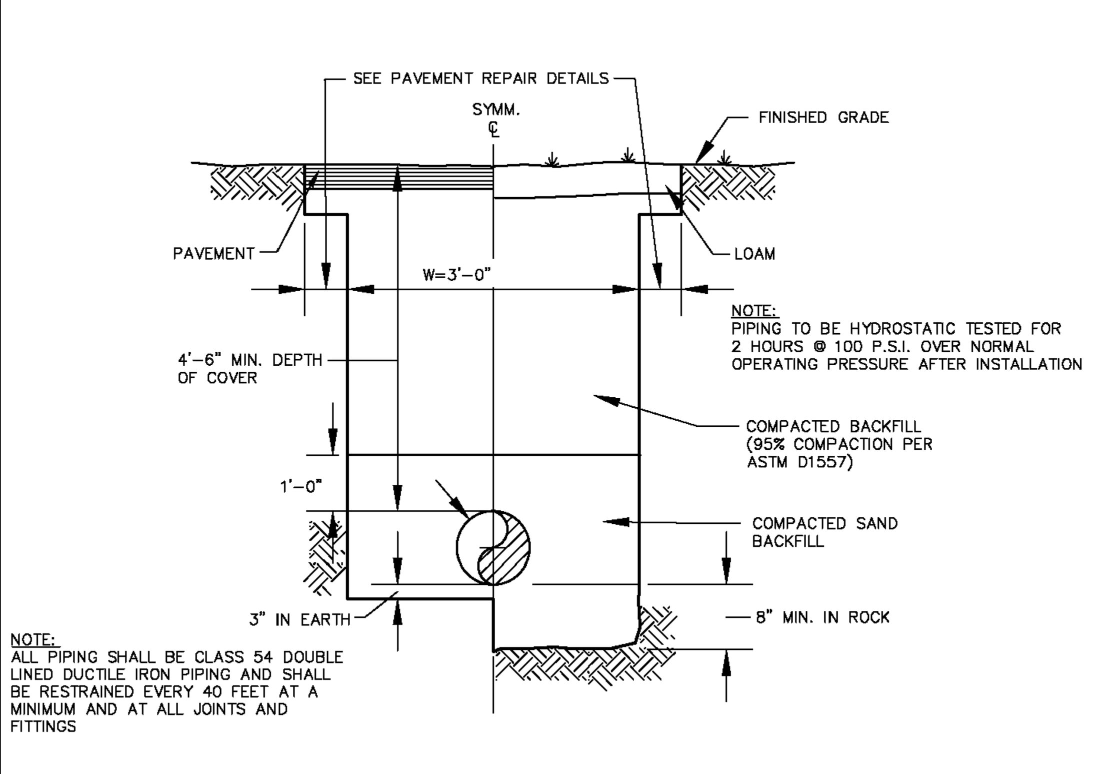

WATER MAIN AND SERVICE TRENCH DETAIL

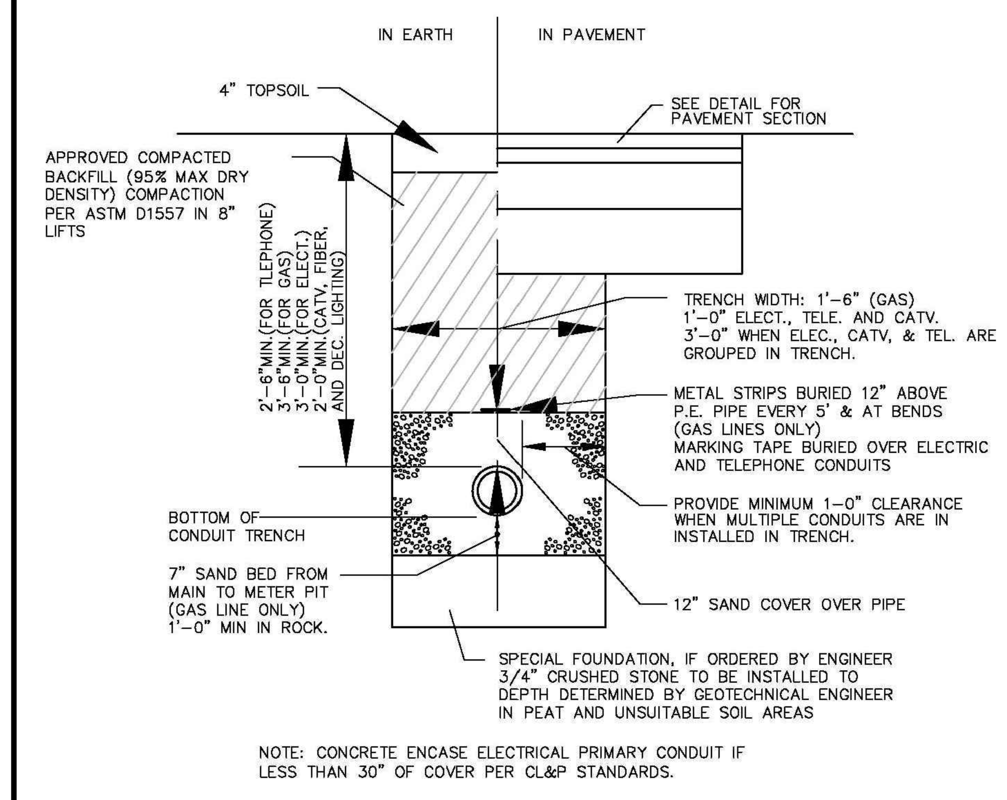

ELETRICAL, CABLE, FIBER, GAS & LIGHTING CONDUIT TRENCH

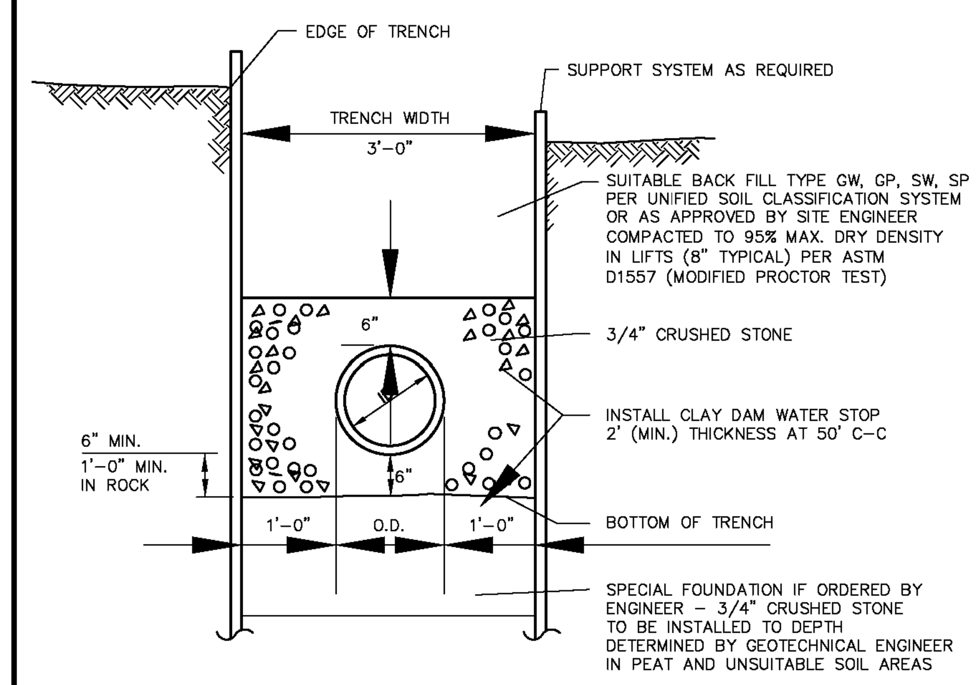

SANITARY SEWER TRENCH SECTION

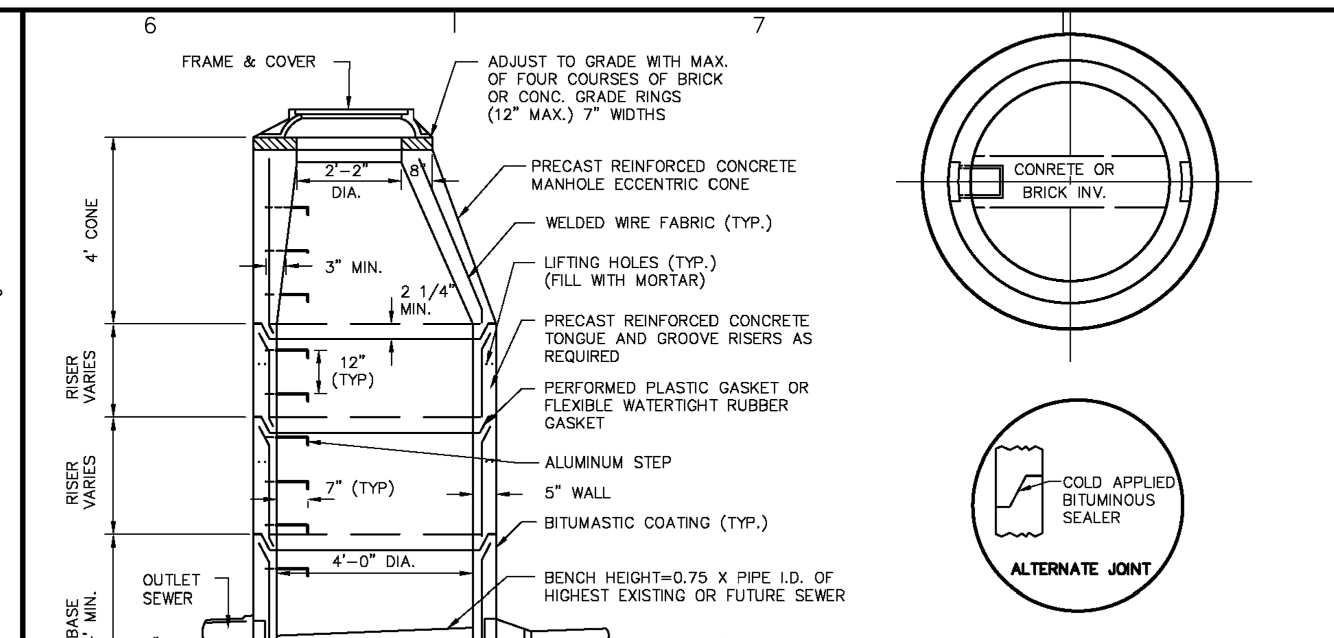

NOTES:
1. 5' OR 6' DIA. PRECAST BASES MAY BE USED WHEN REQUIRED DUE TO SIZE OR NUMBER OF PIPES AT THE MANHOLE. PRECAST REDUCERS WILL BE PLACED ABOVE THE 5' & 6' BASES AS DIRECTED BY THE ENGINEER. WALL THICKNESS TO INCREASE 1" FOR EACH 1' OF INSIDE DIAMETER INCREASE.

2. WHEN INLET SEWER INVERT TO OUTLET SEWER INVERT ELVATION EXCEEDS 24" USE DROP CONNECTION.

PRECAST SANITARY MANHOLE

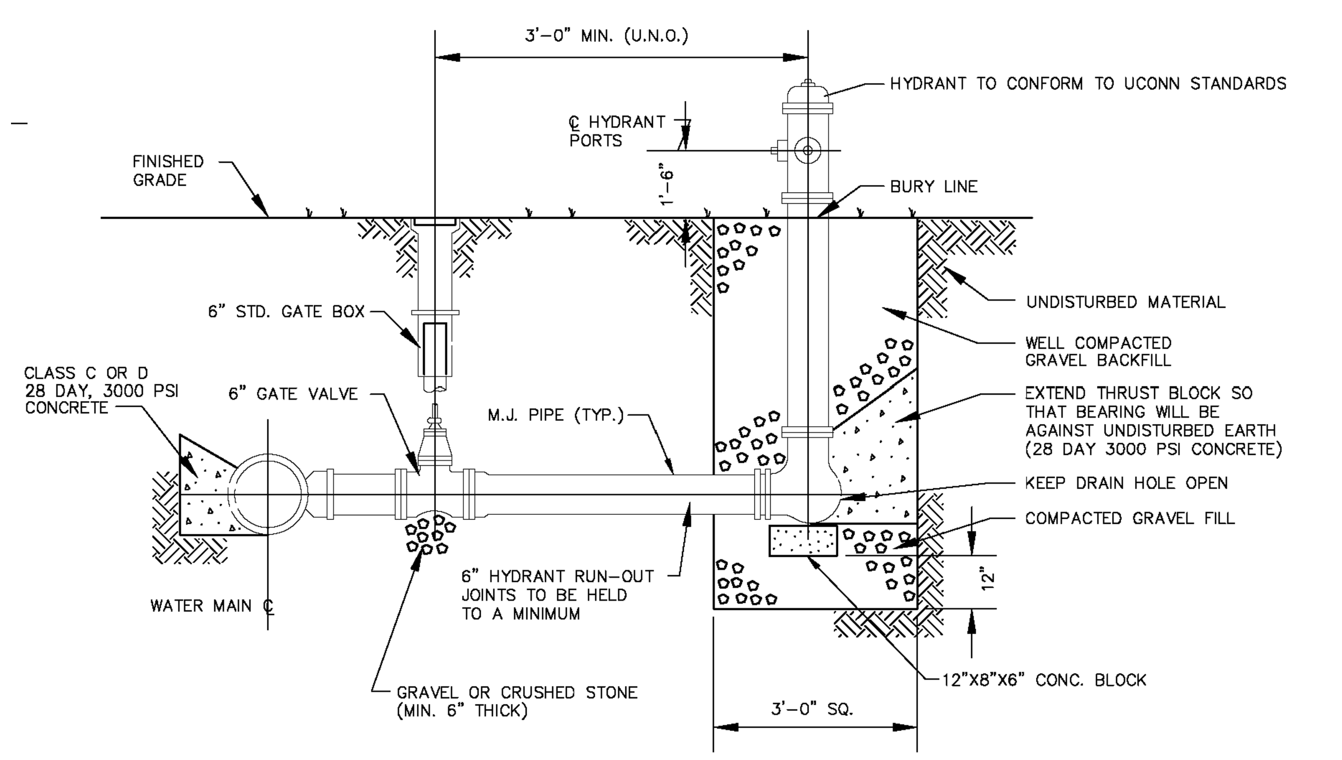

HYDRANT ASSEMBLY

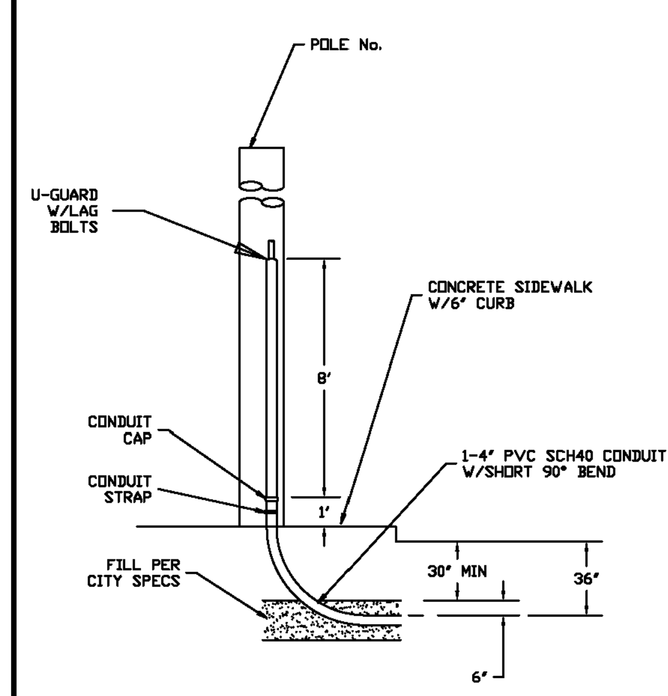

RISER

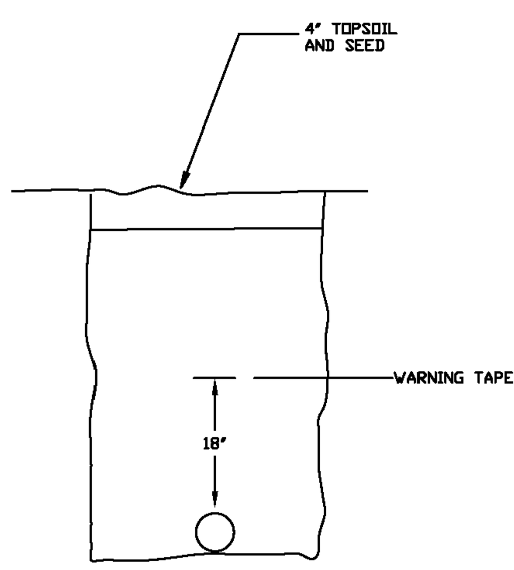

EARTH TRENCH RESTORATION (GRASS)

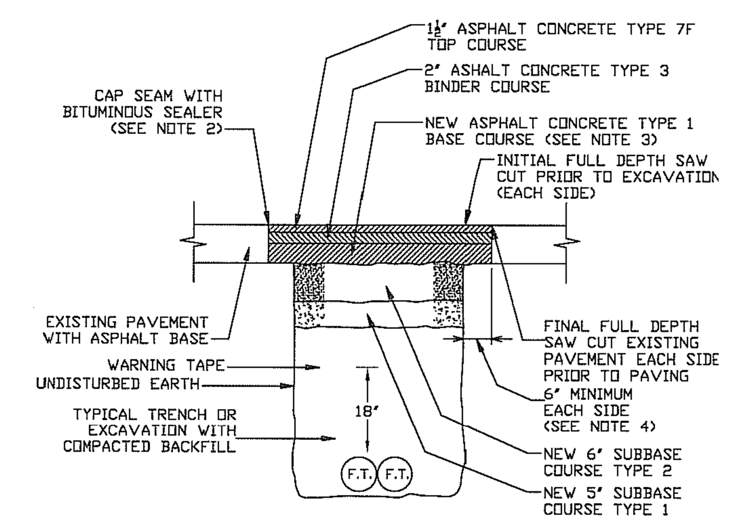

NOTES:
1. EXISTING PAVEMENT IS TO BE SAW CUT FULL DEPTH TO OBTAIN A STRAIGHT AND NEAT EDGE FOR PAVING. SAW CUT IS TO BE MADE AFTER BACKFILLING THE TRENCH TO BOTTOM OF NEW PAVEMENT SECTION.
2. ALL SEAMS BETWEEN EXISTING AND NEW SURFACES ARE TO BE SEALED WITH AN ASPHALT FILLER CORRESPONDING TO THE MATERIAL REQUIREMENTS OF THIS PARTICULAR MARKET.
3. BOTTOM OF ASPHALT BASE COURSE IS TO MATCH THE BOTTOM OF OR BE SET BELOW BOTTOM OF EXISTING ASPHALT PAVEMENT TO PROVIDE FULL REQUIRED THICKNESS OF ASPHALT TOP AND BINDER AND MINIMUM THICKNESS ASPHALT OF ASPHALT BASE. MINIMUM THICKNESS OF ASPHALT BASE IS:
HEAVY DUTY PAVEMENT - 8 INCHES
MEDIUM DUTY PAVEMENT - 3 INCHES
LIGHT DUTY PAVEMENT - 0 INCHES
4. 6 INCH MINIMUM TO BE FROM EDGE OF UNDISTURBED EARTH, EACH SIDE OF TRENCH.

PAVEMENT TRENCH RESTORATION (ASPHALT BASE)

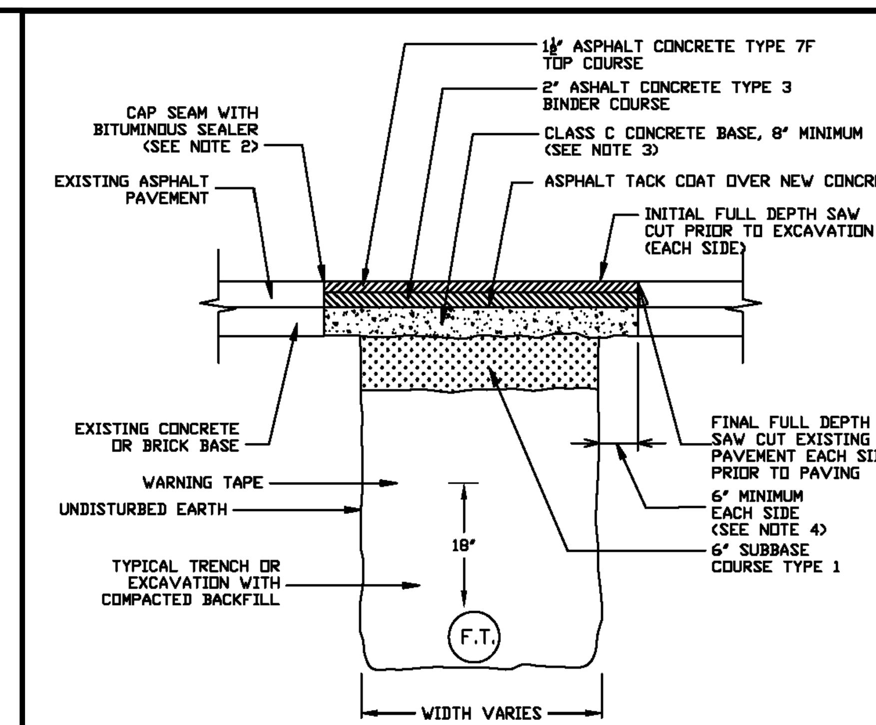

NOTES:
1. EXISTING PAVEMENT IS TO BE SAW CUT FULL DEPTH TO OBTAIN A STRAIGHT AND NEAT EDGE FOR PAVING. SAW CUT IS TO BE MADE AFTER BACKFILLING THE TRENCH TO BOTTOM OF NEW PAVEMENT SECTION.
2. ALL SEAMS BETWEEN EXISTING AND NEW SURFACES ARE TO BE SEALED WITH AN ASPHALT FILLER CORRESPONDING TO THE MATERIAL REQUIREMENTS OF THIS PARTICULAR MARKET.
3. CONCRETE FOR NEW BASE IS TO CORRESPOND TO THE REQUIREMENTS OF N.Y.S.D.O.T. SECTION 503, CLASS C OR F. TOP OF NEW CONCRETE BASE IS TO BE EVEN WITH OR LOWER THAN TOP OF EXISTING CONCRETE BASE TO PROVIDE FULL THICKNESS OF ASPHALT TOP AND BINDER, AND MINIMUM 8 INCH CONCRETE BASE.
4. 6 INCH MINIMUM TO BE FROM EDGE OF UNDISTURBED EARTH, EACH SIDE OF TRENCH.

PAVEMENT TRENCH RESTORATION (CONCRETE BASE)

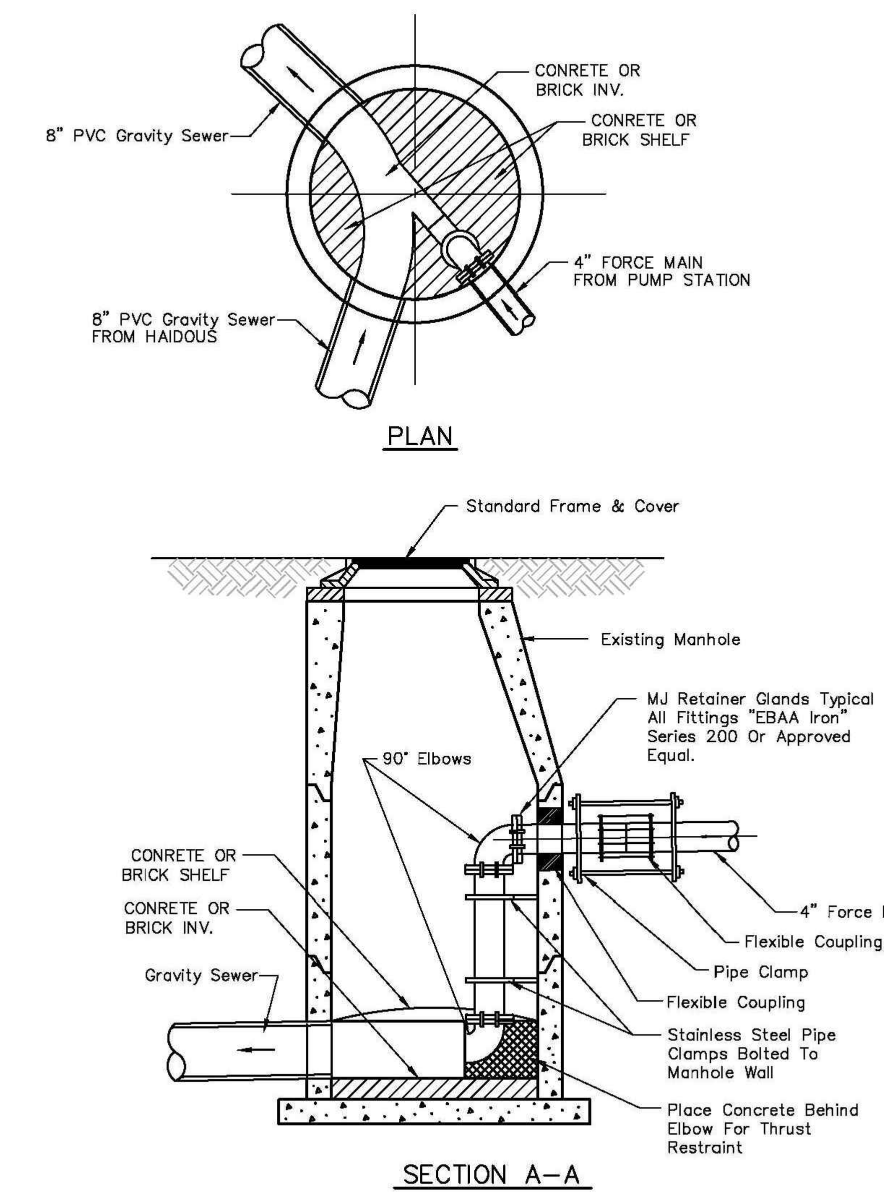

FORCE MAIN TERMINAL MANHOLE

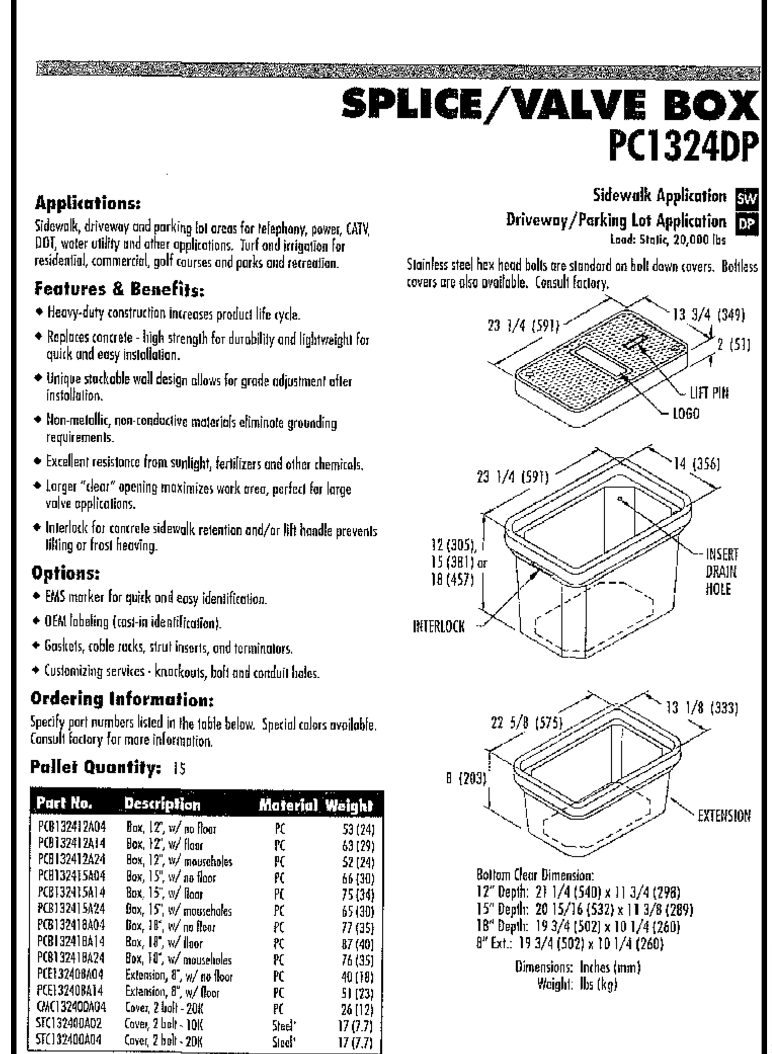

SPLICE/VALVE BOX
PC1324DP

Sidewalk Application SW
Driveway/Parking Lot Application DP
Load: Static, 20,000 lbs

Applications:
Sidewalk, driveway and parking lot areas for telephony, power, CATV, DOT, water utility and other applications. Turf and irrigation for residential, commercial, golf courses and parks and recreation.

Features & Benefits:
- Heavy-duty construction increases product life cycle.
- Replaces concrete - high strength for durability and lightweight for quick and easy installation.
- Unique stackable wall design allows for grade adjustment after installation.
- Non-metallic, non-conductive materials eliminate grounding requirements.
- Excellent resistance from sunlight, fertilizers and other chemicals.
- Larger "clear" opening maximizes work area, perfect for large valve applications.
- Interlock for concrete sidewalk retention and/or lift handle prevents lifting or frost heaving.

Options:
- EMS marker for quick and easy identification.
- OEM labeling (cast-in identification).
- Gaskets, cable racks, strut inserts, and terminators.
- Customizing services - knockouts, bolt and conduit holes.

Ordering Information:
Specify part numbers listed in the table below. Special colors available. Consult factory for more information.

Pallet Quantity: 15

Part No.	Description	Material	Weight
PCB132412A04	Box, 12", w/ no floor	PC	53 (24)
PCB132412A14	Box, 12", w/ floor	PC	63 (29)
PCB132412A24	Box, 12", w/ mouseholes	PC	52 (24)
PCB132415A04	Box, 15", w/ no floor	PC	66 (30)
PCB132415A14	Box, 15", w/ floor	PC	75 (34)
PCB132415A24	Box, 15", w/ mouseholes	PC	65 (30)
PCB132418A04	Box, 18", w/ no floor	PC	77 (35)
PCB132418A14	Box, 18", w/ floor	PC	87 (40)
PCB132418A24	Box, 18", w/ mouseholes	PC	76 (35)
PCE132408A04	Extension, 8", w/ no floor	PC	40 (18)
PCE132408A14	Extension, 8", w/ floor	PC	51 (23)
CMC132400A04	Cover, 2 bolt - 20K	PC	26 (12)
STC132400A02	Cover, 2 bolt - 10K	Steel*	17 (7.7)
STC132400A04	Cover, 2 bolt - 20K	Steel*	17 (7.7)

Stackable designs available.
*See STEEL COVER OPTIONS (page 45).

Stainless steel hex head bolts are standard on bolt down covers. Boltless covers are also available. Consult factory.

23 1/4 (591) 13 3/4 (349) 2 (51) LIFT PIN LOGO
23 1/4 (591) 14 (356) 12 (305), 15 (381) or 18 (457) INSERT DRAIN HOLE INTERLOCK
22 5/8 (575) 13 1/8 (333) 8 (203) EXTENSION

Bottom Clear Dimension:
12" Depth: 21 1/4 (540) x 11 3/4 (298)
15" Depth: 20 15/16 (532) x 11 3/8 (289)
18" Depth: 19 3/4 (502) x 10 1/4 (260)
8" Ext.: 19 3/4 (502) x 10 1/4 (260)

Dimensions: Inches (mm)
Weight: lbs (kg)

SPLICE/VALVE BOX (PC1324DP)

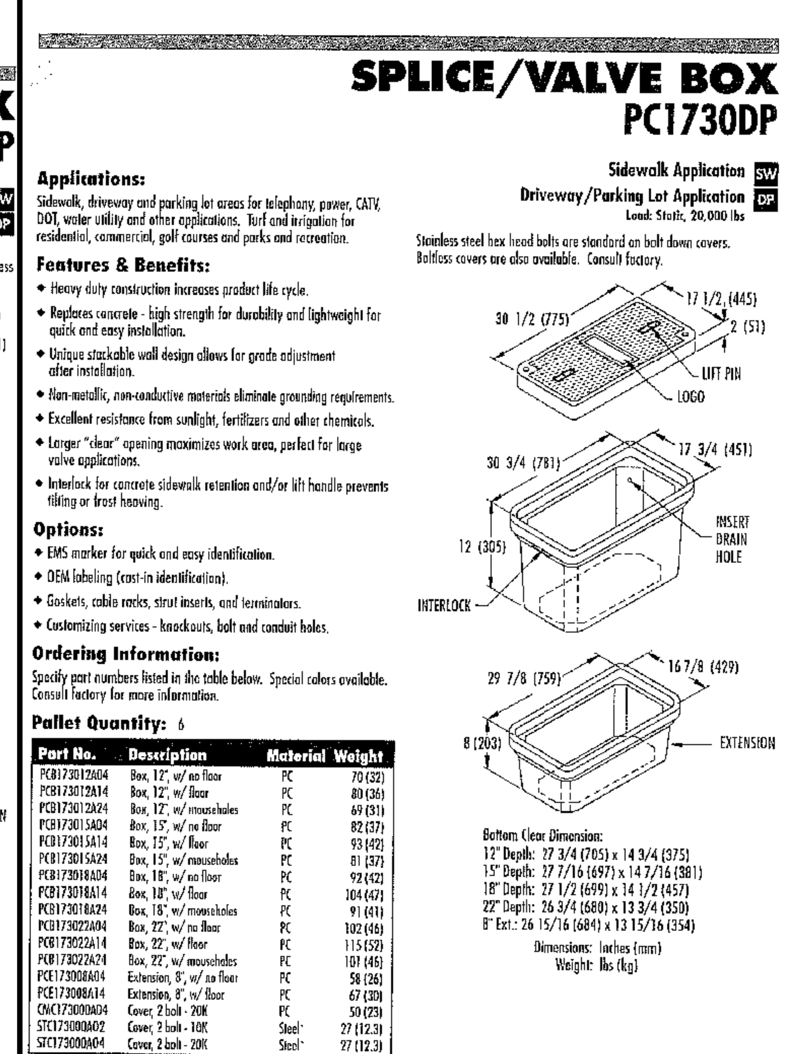

SPLICE/VALVE BOX
PC1730DP

Sidewalk Application SW
Driveway/Parking Lot Application DP
Load: Static, 20,000 lbs

Applications:
Sidewalk, driveway and parking lot areas for telephony, power, CATV, DOT, water utility and other applications. Turf and irrigation for residential, commercial, golf courses and parks and recreation.

Features & Benefits:
- Heavy duty construction increases product life cycle.
- Replaces concrete - high strength for durability and lightweight for quick and easy installation.
- Unique stackable wall design allows for grade adjustment after installation.
- Non-metallic, non-conductive materials eliminate grounding requirements.
- Excellent resistance from sunlight, fertilizers and other chemicals.
- Larger "clear" opening maximizes work area, perfect for large valve applications.
- Interlock for concrete sidewalk retention and/or lift handle prevents lifting or frost heaving.

Options:
- EMS marker for quick and easy identification.
- OEM labeling (cast-in identification).
- Gaskets, cable racks, strut inserts, and terminators.
- Customizing services - knockouts, bolt and conduit holes.

Ordering Information:
Specify part numbers listed in the table below. Special colors available. Consult factory for more information.

Pallet Quantity: 6

Part No.	Description	Material	Weight
PCB173012A04	Box, 12", w/ no floor	PC	70 (32)
PCB173012A14	Box, 12", w/ floor	PC	80 (36)
PCB173012A24	Box, 12", w/ mouseholes	PC	69 (31)
PCB173015A04	Box, 15", w/ no floor	PC	82 (37)
PCB173015A14	Box, 15", w/ floor	PC	93 (42)
PCB173015A24	Box, 15", w/ mouseholes	PC	81 (37)
PCB173018A04	Box, 18", w/ no floor	PC	92 (42)
PCB173018A14	Box, 18", w/ floor	PC	104 (47)
PCB173018A24	Box, 18", w/ mouseholes	PC	91 (41)
PCB173022A04	Box, 22", w/ no floor	PC	102 (46)
PCB173022A14	Box, 22", w/ floor	PC	115 (52)
PCB173022A24	Box, 22", w/ mouseholes	PC	101 (46)
PCE173008A04	Extension, 8", w/ no floor	PC	58 (26)
PCE173008A14	Extension, 8", w/ floor	PC	67 (30)
CMC173000A04	Cover, 2 bolt - 20K	PC	50 (23)
STC173000A02	Cover, 2 bolt - 10K	Steel*	27 (12.3)
STC173000A04	Cover, 2 bolt - 20K	Steel*	27 (12.3)

Stackable designs available.
*See STEEL COVER OPTIONS (page 45).

Stainless steel hex head bolts are standard on bolt down covers. Boltless covers are also available. Consult factory.

30 1/2 (775) 17 1/2 (445) 2 (51) LIFT PIN LOGO
30 3/4 (781) 17 3/4 (451) 12 (305) INSERT DRAIN HOLE INTERLOCK
29 7/8 (759) 16 7/8 (429) 8 (203) EXTENSION

Bottom Clear Dimension:
12" Depth: 27 3/4 (705) x 14 3/4 (375)
15" Depth: 27 7/16 (697) x 14 7/16 (381)
18" Depth: 27 1/2 (699) x 14 1/2 (457)
22" Depth: 26 3/4 (680) x 13 3/4 (350)
8" Ext.: 26 15/16 (684) x 13 15/16 (354)

Dimensions: Inches (mm)
Weight: lbs (kg)

SPLICE/VALVE BOX (PC1730DP)

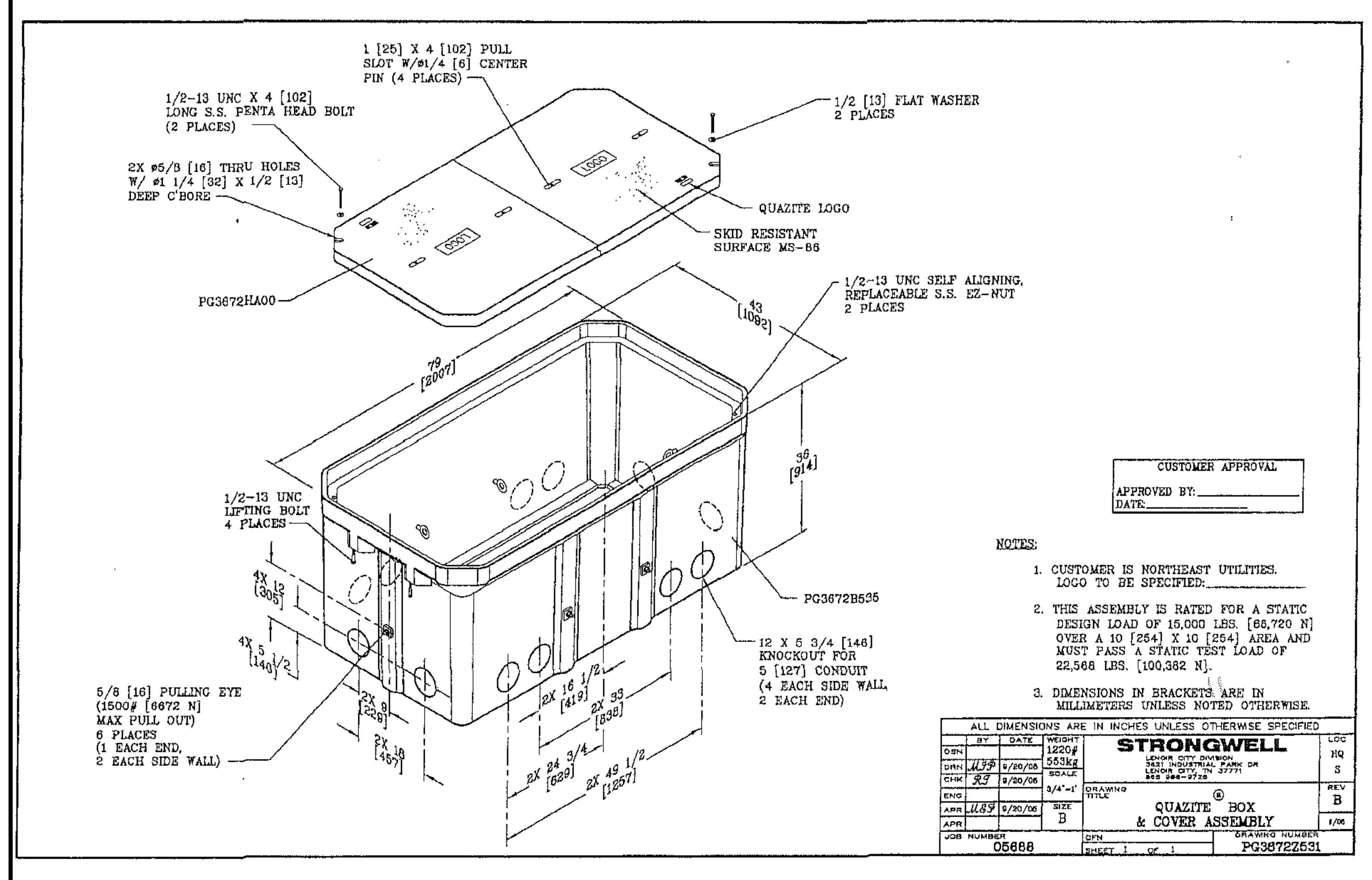

QUAZITE BOX & COVER ASSEMBLY

Date	Description	No.

REVISIONS

JOHN D. PLANTE
CT PROFESSIONAL ENGINEER #19399

LANGAN
555 Long Wharf Drive, New Haven, CT 06511
T: 203.562.5771 F: 203.789.6142 www.langan.com
NEW JERSEY NEW YORK CONNECTICUT PENNSYLVANIA OHIO
VIRGINIA WASHINGTON DC FLORIDA NORTH DAKOTA CALIFORNIA
ABU DHABI ATHENS DOHA DUBAI ISTANBUL
Langan Engineering, Environmental, Surveying and Landscape Architecture, D.P.C.
Langan Engineering and Environmental Services, Inc.
Langan CT, Inc.
Langan International LLC
Collectively known as Langan

Project
STORRS CENTER PHASE II
MANSFIELD CONNECTICUT

Drawing Title
UTILITY DETAILS I

Project No. 140105801
Date 04/03/14
Scale NTS
Drawn By HLS
Checked By CVZ
Drawing No. CU501

PROJECT No. 140105801

© 2014 Langan

Filename: \\langan.com\data\NH\data8\140105801\Cadd Data - 140105801\SheetFiles\140105801-CU501-0101.dwg Date: 4/3/2014 Time: 11:21 User: hsmith Style Table: Langan.stb Layout: CU501

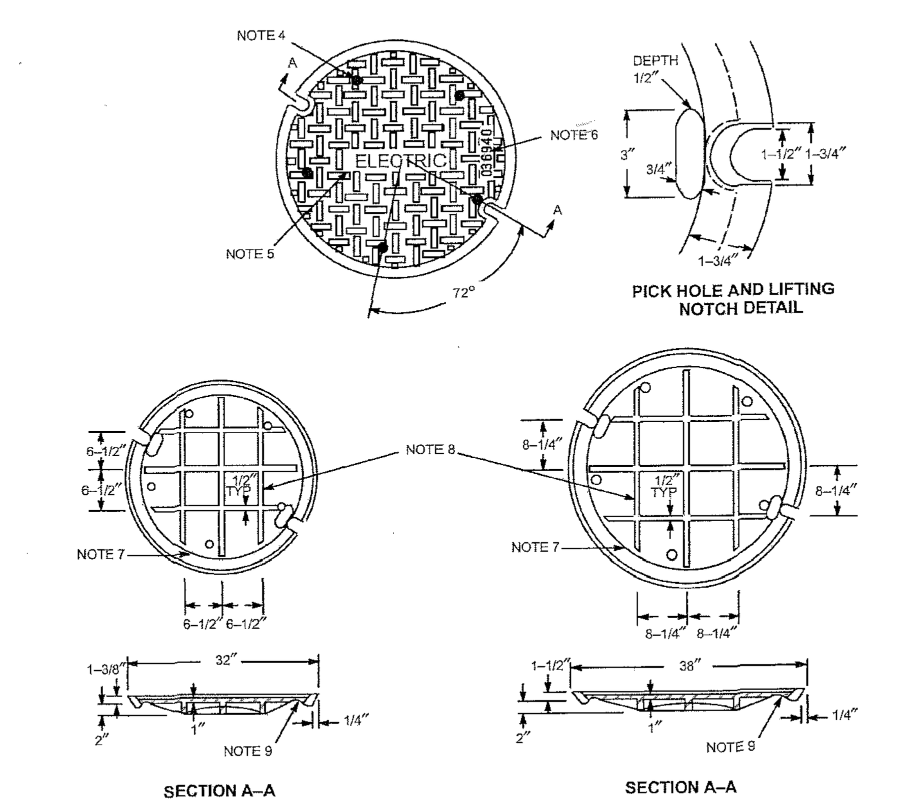

Notes
1. The gray cast iron shall conform to ASTM A48–1983 Class 30–B.
2. Design loading shall be in accordance with AASHTO HS20–1983.
3. Bearing surfaces of cover shall be machine finished with tolerance of 1/16 inch +0 inches.
4. Five 1–1/4–inch diameter holes, 5 inches from edge and 72 degrees apart.
5. "ELECTRIC" letters 2–1/2 inches high.
6. NU stock code shall be cast in cover between pick holes, 32 inch **SC 0174820**, 38 inch **SC 0174821**.
7. Foundry name or insignia and date (year when manufactured) shall be cast in the underside of cover.
8. Ribs to be tapered from 1/2 inch to 3/4 inch.
9. Lifting notch adjacent to each pick hole.
10. The 32–inch cover fits into the 30–inch frame. The 38–inch cover fits into the 36–inch frame. Weight of 32–inch cover approximately 265 pounds and 38–inch cover approximately 365 pounds.

ORIGINAL 7/2/75 APPROVED 3/1/97	COVERS – MANHOLE – CAST IRON 32" AND 38" DIAMETER			
	NORTHEAST UTILITIES	MATERIAL SPECIFICATION	**SPC C–709**	8

CAST IRON MANHOLE COVERS

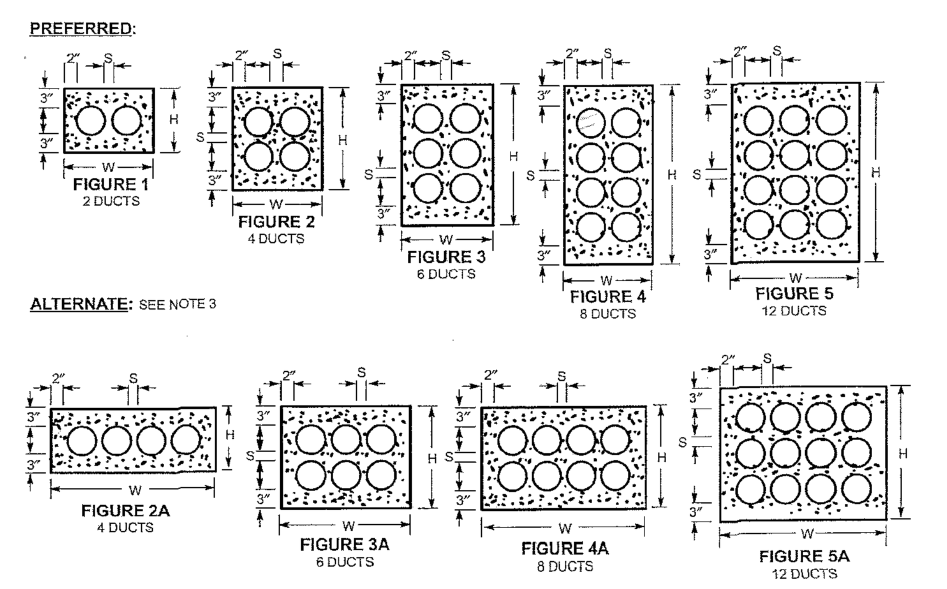

Dimensions In Inches

Fig	4" Duct W	4" Duct H	4" Duct S	5" Duct W	5" Duct H	5" Duct S	6" Duct W	6" Duct H	6" Duct S
1	14–1/2	10–1/2	1–1/2	16–1/2	11–1/2	1–1/2	19	12–1/2	2
2	14–1/2	16–1/2	1–1/2	16–1/2	18–1/2	1–1/2	19	21	2
2A	26–1/2	10–1/2	1–1/2	30–1/2	11–1/2	1–1/2	36	12–1/2	2
3	14–1/2	22–1/2	1–1/2	16–1/2	25–1/2	1–1/2	19	29–1/2	2
3A	20–1/2	16–1/2	1–1/2	23–1/2	18–1/2	1–1/2	27–1/2	21	2
4	14–1/2	28–1/2	1–1/2	16–1/2	32–1/2	1–1/2	19	38	2
4A	26–1/2	16–1/2	1–1/2	30–1/2	18–1/2	1–1/2	36	21	2
5	20–1/2	28–1/2	1–1/2	23–1/2	32–1/2	1–1/2	27–1/2	38	2
5A	26–1/2	22–1/2	1–1/2	30–1/2	25–1/2	1–1/2	36	29–1/2	2

Notes
1. At manholes conduit banks shall be per Figures 1, 2, 3, 4, or 5.
2. Minimum cover from top of a conduit bank to the pavement or earth surface shall be:
   a. State highways – 36 inches
   b. Railroad tracks – 60 inches
   c. All other areas – 24 inches
3. In the conduit run between manholes if obstructions are encountered or to reduce trench depth, Figures 2A, 3A, 4A, or 5A are permissible.
4. Concrete shall be 2500 psi, 1/2 inch maximum stone, 6–9 inches slump of such consistency that spading will ensure the flow of concrete between and under the individual ducts, but not so wet as to float the ducts. For tier buildup construction a stiffer consistency should be used.

ORIGINAL 5/29/75 APPROVED 11/2/99	CONDUIT BANK CONSTRUCTION			
	NORTHEAST UTILITIES	DESIGN & APPLICATION STANDARD	**DTR 73.209**	5

CONDUIT BANK CONSTRUCTION

GENERAL – Pad–mounted oil insulated equipment (such as transformers, transclosures, switches, etc) should be installed so as to be accessible, not constitute an environmental hazard or a fire hazard, and be protected from damage. In URD areas transformers installed at residential front lot lines are not subject to the requirements of this Standard, refer to **DTR 42.031**.

LOCATION – The pad-mounted equipment should be installed at a location where permanent access will be assured for future operation and maintenance as well as to permit installation, replacement and removal of the equipment by means of a winch truck with the boom up. Where noise may be a problem, careful consideration should be given when selecting a location. Areas subject to flooding should be avoided, as should other environmentally sensitive areas noted in **DSEM Section 06.32**. The building owner's and/or tenant's fire insurance carrier may restrict the proximity of the equipment to doors, windows or combustible materials and such requirements are the responsibility of the customer subject to the requirements of Northeast Utilities. In the absence of other requirements, the equipment shall be located with the following minimum clearances from various building facilities. The distances mentioned in this section shall not supersede any local ordinance or code which requires greater clearances.

Minimum Distance

Item	In Front of In Feet	To Side of In Feet	Below In Feet
Door	20	10	–
Air intake	10	10	25
Window	10	3	5
Fire escape	20	20	–
Combustible wall	6	6	–
Noncombustible wall	5	3	–
Fuel tanks (above and below grade)	10	10	–
Natural gas or propane connections			
CT/MA	3	3	–
NH	15	15	–
Gasoline dispensing unit	20	20	–

OIL SUMP – If the surrounding grade pitches toward critical areas, it is recommended that an oil sump be provided. This should consist of 3/4–inch trap rock fill under and around the equipment pad adequate to contain the quantity of oil in the equipment to be installed at the given location.

ADDITIONAL FIRE PROTECTION – If the building owner's and/or tenant's combustible facilities adjacent to the equipment require fire protection beyond that provided by oil sump, it shall be their responsibility to provide such protection in the form of space separation, fire resistant barriers, automatic spray systems, other oil containment facilities, or other means approved by their fire insurance company.

EQUIPMENT PROTECTION – Where pad–mounted equipment would be exposed to possible damage by vehicular traffic, protective bumpers are to be installed on exposed sides. Galvanized steel pipes 4–inch minimum diameter filled with concrete, I–beams 5–inch minimum, or other suitable means of protection may be used as bumpers. Such pipes or I–beams shall extend 42–inch minimum both above and below grade. Heavier bumpers set deeper should be considered where exposed to heavy trucks. Bumpers should be 10–foot minimum from the operating side of concrete pad and on the other sides 36–inch minimum from equipment or pad, whichever projects farther. The maximum spacing between bumpers on exposed sides should be 60 inches.

EQUIPMENT LOCKS – Any equipment, with provisions for locking, that is left on site and is accessible to the general public, shall be padlocked. This includes installations that are not complete and not energized. Completed pad–mount transformer installations shall meet "TAMPERPROOF EQUIPMENT LOCK" requirements, DTR 03.401.

ORIGINAL 12/5/73 APPROVED 1/29/02	PAD–MOUNTED OIL INSULATED EQUIPMENT LOCATION AND MECHANICAL PROTECTION			
	NORTHEAST UTILITIES	DESIGN & APPLICATION STANDARD	**DTR 42.061**	9

PAD-MOUNTED OIL INSULATED EQUIPMENT

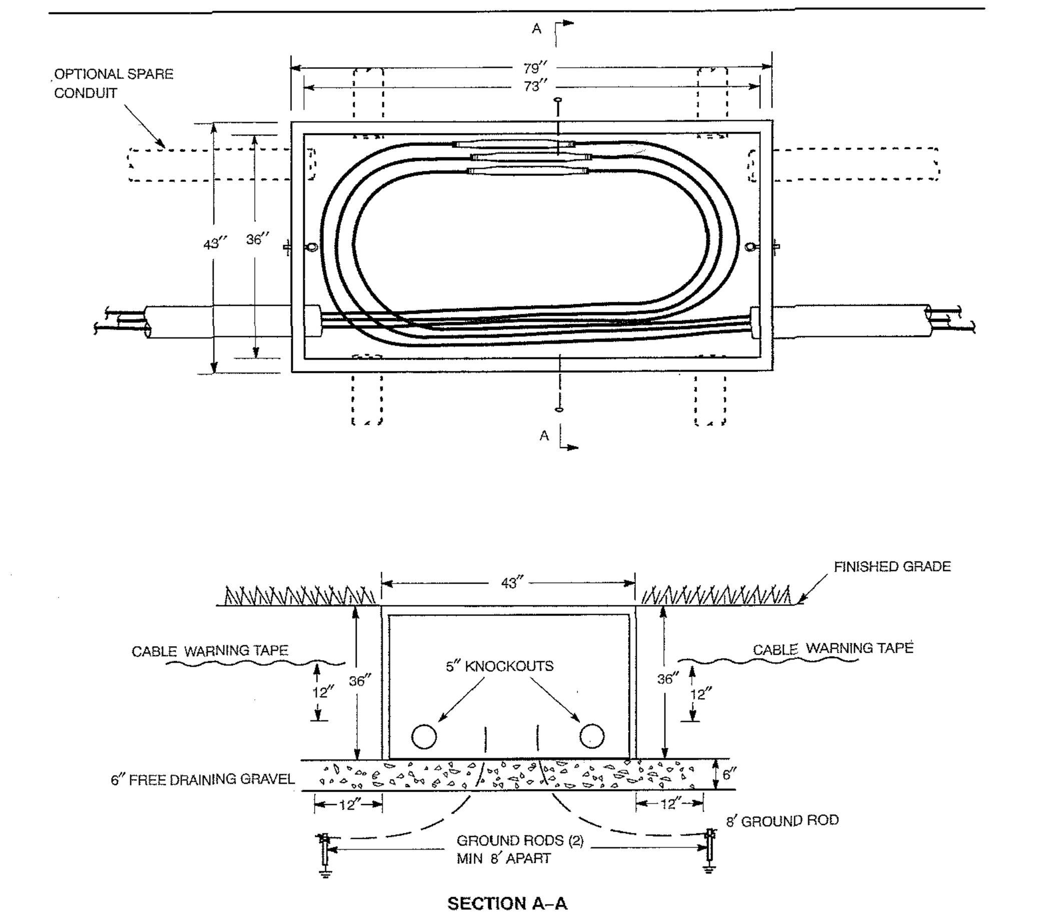

Notes
1. Install polymer concrete vault. Vault is rated for occasional vehicular traffic, however, do not install in roadway applications. Vault shall be used to splice one three–phase cable, maximum #4/0 Al.
2. The excavation shall be carried to a minimum depth of 6" below the bottom and 12" beyond the edge.
3. Install two 8' galvanized steel ground rods adjacent to the vault and ground per **DTR 78.151**. Provide #6 Cu bond for communications companies.
4. Select splices from **DTR 33.501–502.**
5. Install warning tape 12" above top of conduit.
6. Install schedule 40 PVC conduit, minimum 4" diameter. Install conduit plugs in spare conduits.

ORIGINAL 3/22/06 APPROVED 3/22/06	VAULT – POLYMER CONCRETE – FOR SPLICING THREE–PHASE PRIMARY – DIRECT–BURIED CONDUIT SYSTEM (CT/MA)		
	NORTHEAST UTILITIES	CONSTRUCTION STANDARD	**DTR 51.601**

POLYMER CONCRETE VAULT

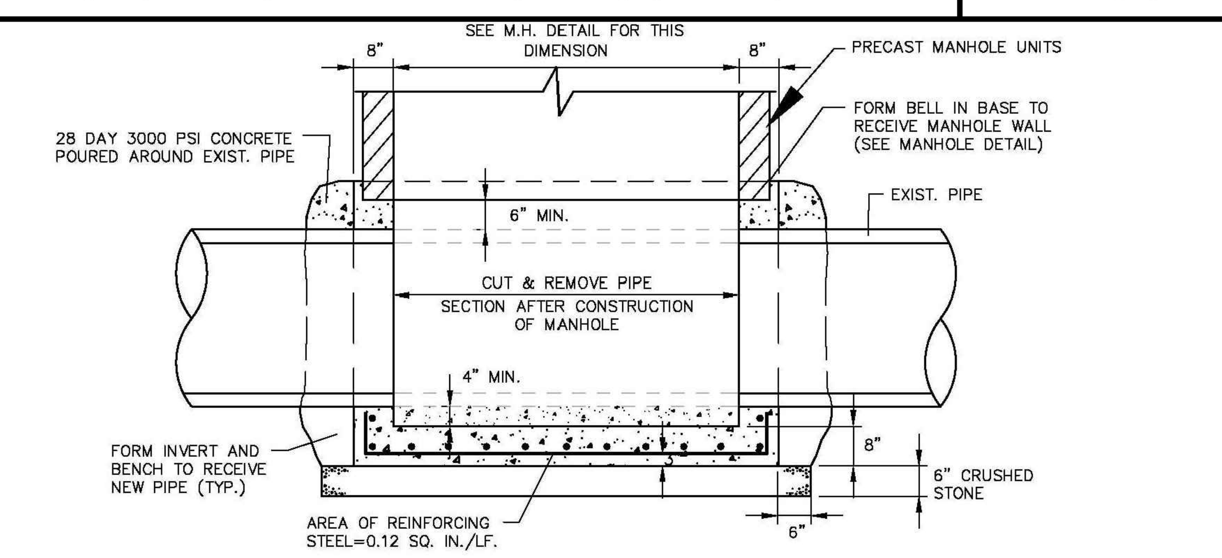

NEW MANHOLE OVER EXISTING PIPE

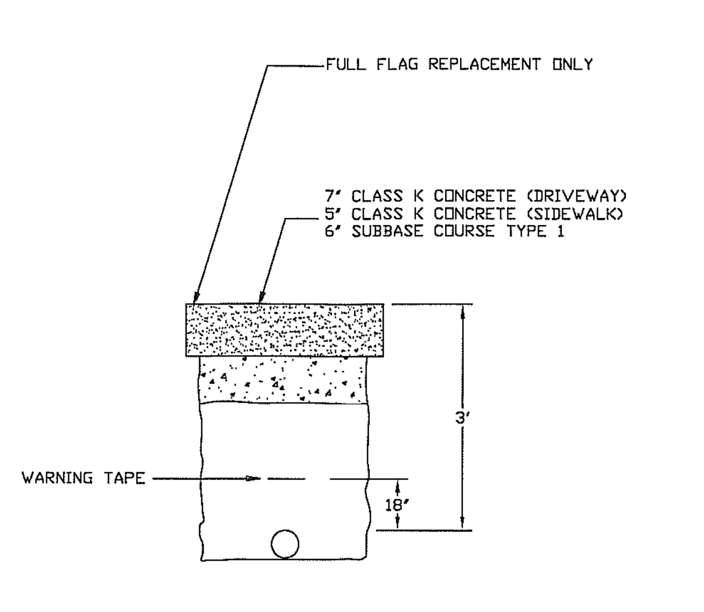

CONCRETE DRIVEWAY/SIDEWALK

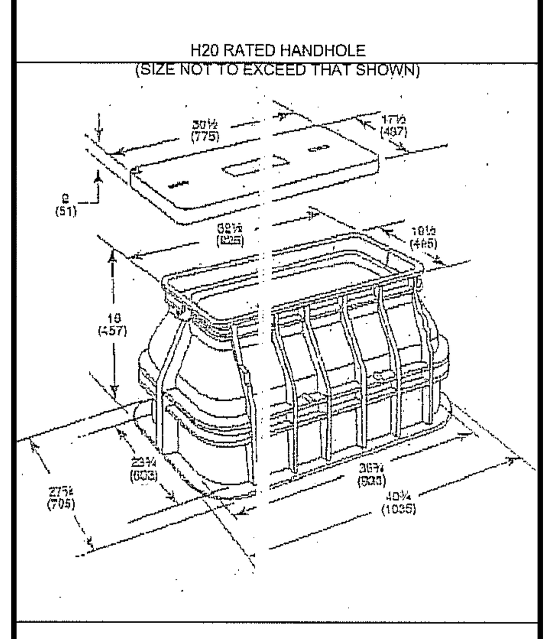

HANDHOLE

Page 2 of 3

Notes
1. The first 10 feet of the riser conduit is to be sunlight resistant Schedule 80 PVC installed, bell end down. (In New Hampshire use steel conduit in areas where excessive traffic and pole placement might endanger the riser and cable from being hit by a moving vehicle.) When Schedule 80 PVC is used for UG, the bell end is installed over the steel bend at the base of the pole and is sealed with putty **SC 0183689**. When connecting two pieces of steel conduit, fittings shall be sealed with pipe compound **SC 0184994**.
2. a. If the UG portion of the conduit is steel, the bend is to be connected by a steel coupling.
   b. If EB or DB type conduits are used, connect conduit to the steel bend with a PVC coupling (socket–female).
3. From the top of the Schedule 80 conduit, extend upward with Schedule 40 PVC conduit, bell end down.
4. The top of the conduit shall extend at least 2 inches above the secondary or neutral attachment height (see **DTR 04.047**). In an all–conduit installation, the top of the conduit shall be sealed with putty **SC 0183689** and jute **SC 0180305**, to prevent water from entering.
5. To select proper conduit size, see **DTR 12.011**, check overall cable(s) diameter (see **DTR's 32.019 thru .020**).

Conduit Size in Inches	Cable Diameter Range in Inches
2	0.5 – 1.4
3	1.4 – 2.4
4	2.4 – 2.9
5	2.9 – 4.0
6	4.0 – 5.0

6. Attach 2 1/2" x 2 1/2" adhesive backed "SIGN, WARNING, UNDERGROUND CABLE" approximately 6 feet above ground on the riser conduit (see **SPC S–471** in Material Book).
7. Preferred location for riser placement is on field side of the pole opposite the direction of traffic. (Road side of pole opposite the direction of traffic is reserved for road crossings.)
8. Contact the toll–free telephone number to locate buried cables before driving ground rods.
9. Steel conduit shall be grounded. If the steel elbow is installed with nonmetallic conduit, it shall also be grounded. Use 5/8" x 8' galvanized steel ground rod.

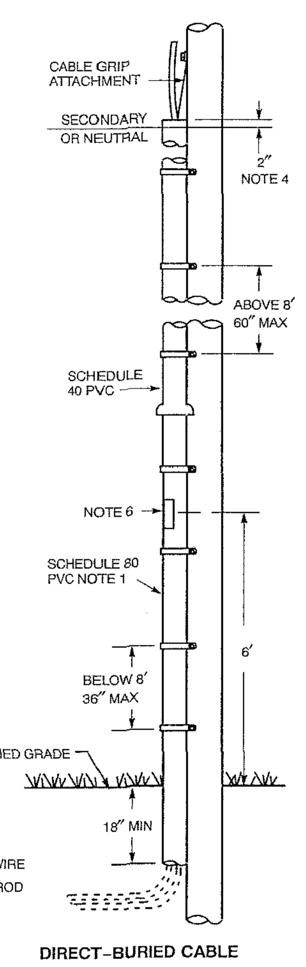

See **DSEM Section 07.82** for trench specifications

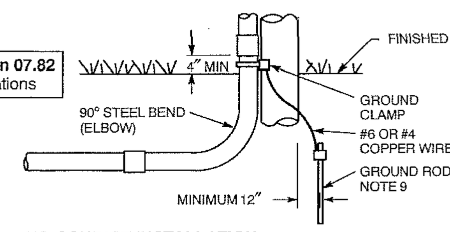

ORIGINAL 8/6/91 APPROVED 6/2/05	CABLE RISER GUIDE			
	NORTHEAST UTILITIES	DESIGN & APPLICATION STANDARD	**DTR 12.010**	10

CABLE RISER GUIDE

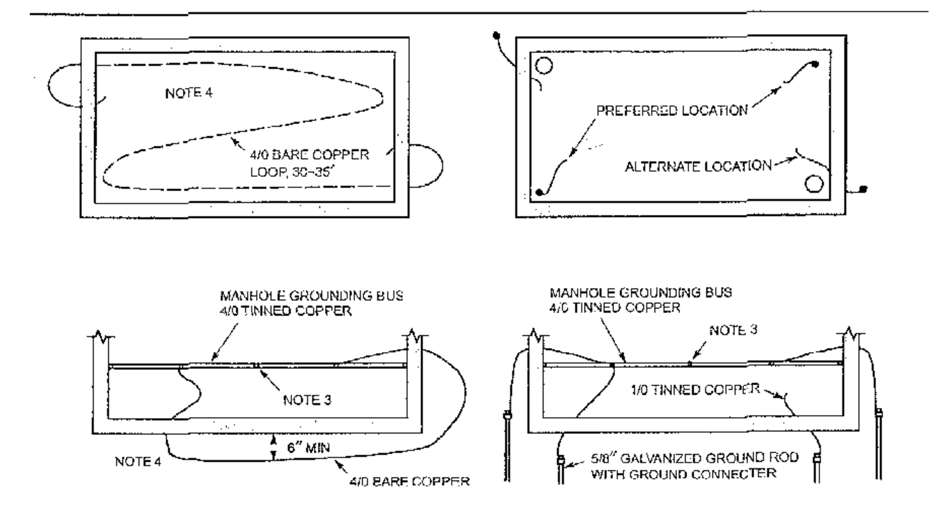

FIGURE 1 – Use when bottom of manhole or vault will be below permanent water level.
   a. Install 4/0 bare copper wire, 30 to 35 feet long, a minimum of 6 inches below floor.
   b. In areas with a high water table, the 4/0 ground wire should be sealed. This is done by adding a compression sleeve with an oil stop **SC 0388244** and placing the sleeve in the concrete or joint grout.

FIGURE 2 – Use when bottom of manhole or vault is above permanent water level or in rocky soil.
   a. Install two 5/8" x 8' galvanized steel ground rods below floor (preferred) or adjacent to walls (alternate).
   b. Drive ground rods sideways, if necessary, in rocky soil.

Notes
1. Install all loop wires or grounds to 25 ohms or less.
2. Connect grounds to 4/0 copper bus in manhole or vault.
3. Install manhole grounding bus with 4–4/0, 4–way compression branch connectors, **SC 0178522**.
4. For poured in place manholes, or overcast, grounding tail can be brought into the manhole through the floor. For all other manholes, bring two (2) tails through duct opening or through split between top and bottom halves.

ORIGINAL 11/28/84 APPROVED 12/10/00	CONDUIT SYSTEM – GROUNDING BELOW GRADE MANHOLES AND VAULTS			
	NORTHEAST UTILITIES	CONSTRUCTION STANDARD	**DTR 76.451**	6

CONDUIT SYSTEM - GROUNDING

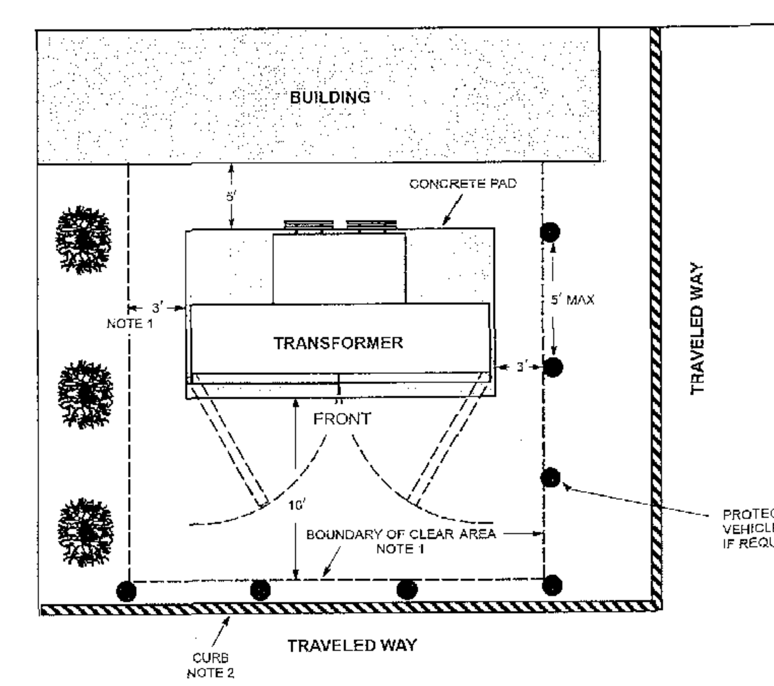

Notes
1. To inspect, provide access, operate elbow connectors and ventilate the transformer, the above specified clear area distances to buildings or shrubs shall be maintained. The distance from the building is to the concrete transformer pad. Property line shall be considered an obstruction, since fences, shrubs, etc. may be installed at a future date by adjacent property owners. Because of the possibility of cooling fins overhanging the pad, side clearances to be increased to 5 feet for transformers 1000 kVA and larger.
2. If no curb exists, or transformer is located closer than 10 feet to the traveled way, protective vehicle posts (●) shall be installed as specified in **DTR 42.061**.
3. Top of transformer pad shall be installed 3 inches above final grade.
4. Transformer shall not be located on steep grades where access to or elbow operation is made difficult.
5. Transformer shall meet the minimum distances to doors, windows, fire escapes, air intakes and walls as specified in **DTR 42.061**.
6. Transformer *is not* to be located with its doors facing the building.
7. Refer to **DTR 58.301** for specific instructions on the installation of the transformer pad.
8. Refer to **DSEM Section 06.32** for information on environmental considerations.

ORIGINAL 4/10/91 APPROVED 1/25/02	PAD–MOUNTED TRANSFORMERS LOCATION TO BUILDINGS AND ROADWAYS			
	NORTHEAST UTILITIES	CONSTRUCTION STANDARD	**DTR 42.047**	6

PAD-MOUNTED TRANSFORMERS

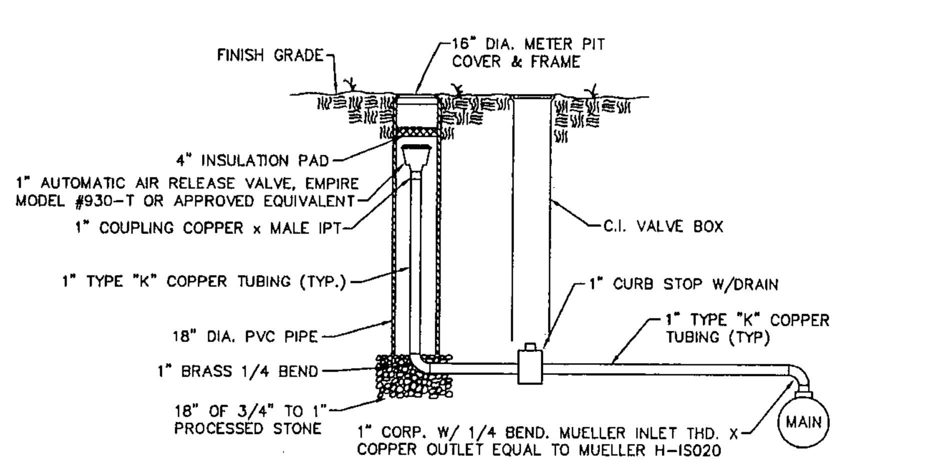

AUTOMATIC AIR RELEASE VALVE

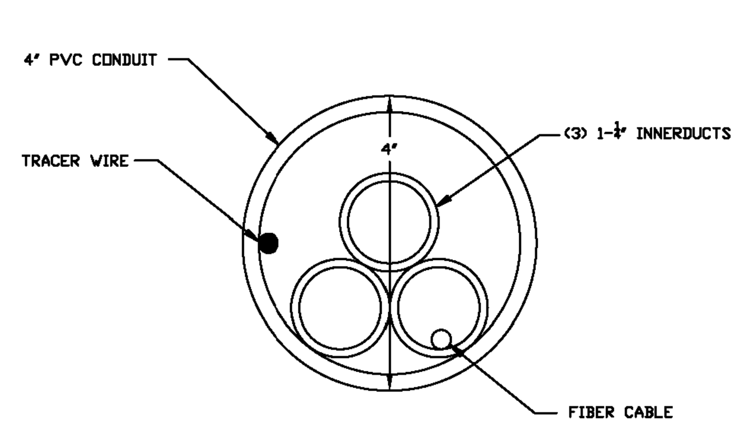

TYPICAL 4" PVC CONDUIT

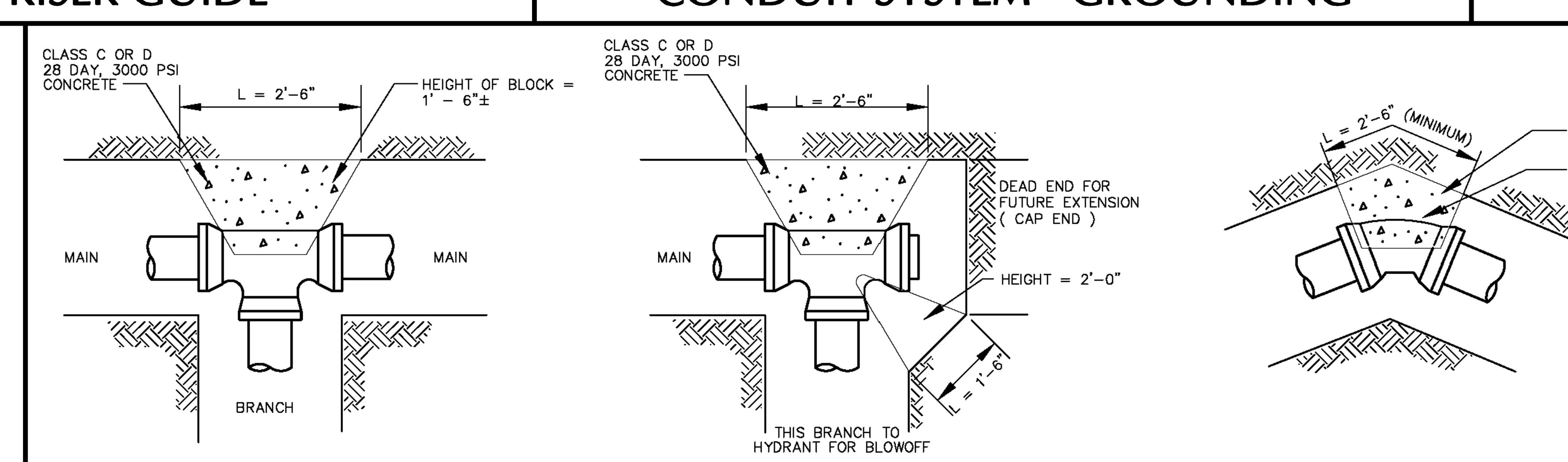

THRUST BLOCKS FOR WATER LINES

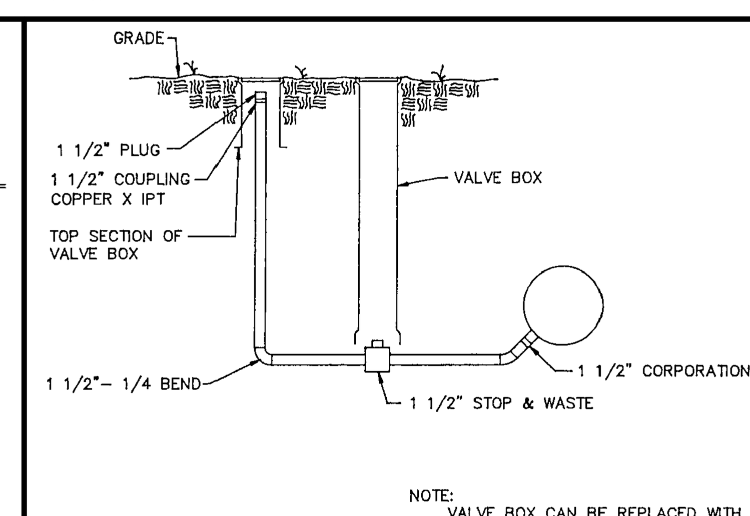

NOTE:
VALVE BOX CAN BE REPLACED WITH A CURB BOX AT THE INSPECTORS OPTION.

LOW POINT BLOW-OFF

Date	Description	No.

REVISIONS

JOHN D. PLANTE
CT PROFESSIONAL ENGINEER #19399

LANGAN
555 Long Wharf Drive, New Haven, CT 06511
T: 203.562.5771 F: 203.789.6142 www.langan.com
NEW JERSEY NEW YORK CONNECTICUT PENNSYLVANIA OHIO
VIRGINIA WASHINGTON DC FLORIDA NORTH DAKOTA CALIFORNIA
ABU DHABI ATHENS DOHA DUBAI ISTANBUL
Langan Engineering, Environmental, Surveying and Landscape Architecture, D.P.C.
Langan Engineering and Environmental Services, Inc.
Langan CT, Inc.
Langan International LLC
Collectively known as Langan

Project
STORRS CENTER
PHASE II
MANSFIELD CONNECTICUT

Drawing Title
UTILITY DETAILS II

Project No. 140105801	Drawing No. CU502
Date 04/03/14	
Scale NTS	
Drawn By HLS	
Checked By CVZ	

PROJECT No. 140105801

© 2014 Langan

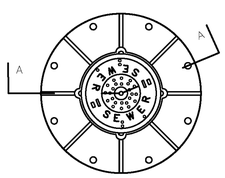

PLAN

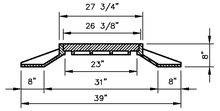

SECTION A-A

NOTE:
FRAME & GRATE TO BE CAMPBELL FOUNDRY COMPANY–PATTERN NUMBER 1221 WITHOUT COVER VENT HOLES

MANHOLE FRAME & COVER

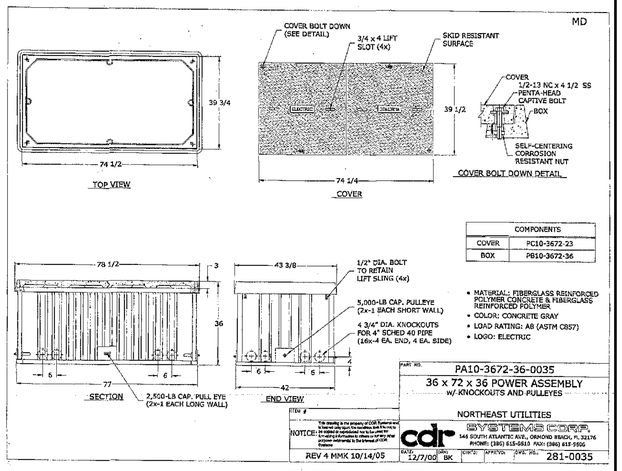

COMPONENTS	
COVER	PC10-3672-23
BOX	PB10-3672-36

- MATERIAL: FIBERGLASS REINFORCED POLYMER CONCRETE & FIBERGLASS REINFORCED POLYMER
- COLOR: CONCRETE GRAY
- LOAD RATING: A8 (ASTM C857)
- LOGO: ELECTUC

POWER ASSEMBLY

PAD – PRECAST CONCRETE – THREE–PHASE TRANSFORMER
500–2500 KVA–76" x 70" x 36"
NORTHEAST UTILITIES
MATERIAL SPECIFICATION
SPC P-015
7

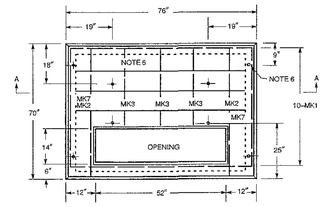

TOP PLAN

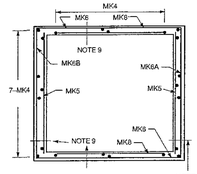

SECTION B–B

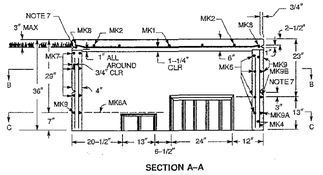

SECTION A–A

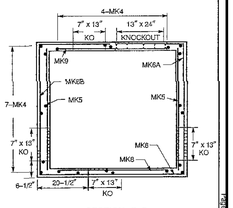

SECTION C–C

PRECAST CONCRETE PAD

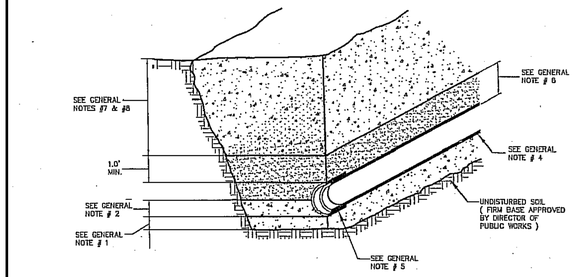

GENERAL NOTES

1. CRUSHED STONE FOUNDATION 3/4" MAXIMUM SIZE SHALL BE PLACED 6" UNDER PIPE AND UP TO THE PIPE GRADE. THE PIPE LAID THEREON, CRUSHED STONE PULLED AGAINST THE PIPE SIDES TO FIRMLY HOLD PIPE IN PLACE.
2. CRUSHED STONE HAUNCHING, 3/4" MAXIMUM SIZE, SHALL BE BROUGHT TO A LEVEL HALFWAY UP THE PIPE, AND OUT TO THE TRENCH WALL AT THIS ELEVATION FOR ALL PIPE.
3. VIBRATING MECHANICAL TAMPERS SHALL NOT BE USED WITHIN THREE PIPE DIAMETERS OVER THE TOP OF THE PIPE.
4. PIPE IS TO BE GIVEN CONTINUOUS BEARING FOR ITS FULL LENGTH. BRIDGING WILL NOT BE ALLOWED.
5. HOLES SHALL BE DUG TO CONTAIN BELL SO THAT PIPE WILL REST UPON ITS BARREL.
6. COARSE SAND OR FINE GRAVEL (3/4" MAX.) SUITABLE FOR BACK FILL SHALL BE PLACED IN LAYERS OF 4" PUDDLED OR TAMPED PER TOWN OF MANSFIELD SPECIFICATIONS AND/OR AS ORDERED BY THE DIRECTOR OF PUBLIC WORKS.
7. 1' ABOVE PIPE TO ROADWAY BASE WITH FREE DRAINING MATERIAL (6" MINUS) AND BACK FILL SHALL BE PLACED IN LAYERS NOT TO EXCEED 12" AND PUDDLED OR TAMPED PER TOWN OFF MANSFIELD SPECIFICATIONS AND AS ORDERED BY THE DIRECTOR OF PUBLIC WORKS.
8. IN EXCESS OF 8'–0" SHORING AND BRACING SHALL BE REQUIRED.

TYPICAL TRENCH CROSS SECTION

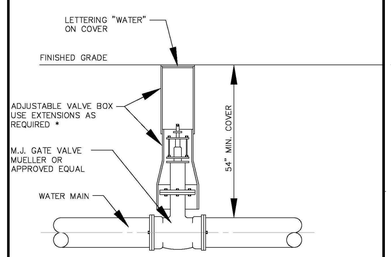

* NOTE: IF EXTENSIONS ARE NECESSARY CONTRACTOR SHALL SET "PLUMB" AND ALIGN PROPERLY FOR ACCESS TO OPERATING NUT.

GATE VALVE & VALVE BOX

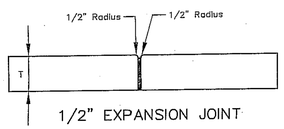

1/2" EXPANSION JOINT

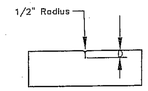

DUMMY JOINT

T = 5" FOR SIDEWALK
T = 8" FOR DRIVEWAY RAMP
T = 20" FOR CURB

D = 1 1/4" FOR SIDEWALK
D = 2" FOR DRIVEWAY RAMP

TRANSVERSE EXPANSION JOINTS are to be set in all concrete curbs and concrete sidewalks at 16' intervals, between a concrete driveway ramp and abutting concrete curb or concrete sidewalk, and in any location deemed necessary by the Town Engineer or the Superintendent of Public Works.

TRANSVERSE DUMMY JOINTS for all sections of concrete sidewalk and concrete driveway ramps, are to be evenly spaced at an interval which best approximates 4' on center.

LONGITUDINAL EXPANSION JOINTS are to be set between all abutting concrete curbs and concrete sidewalks, on street line if a private concrete sidewalk, concrete driveway ramp or wall abutts, and in any location deemed necessary by the Town Engineer of the Superintendent of Public Works.

CONCRETE JOINTS

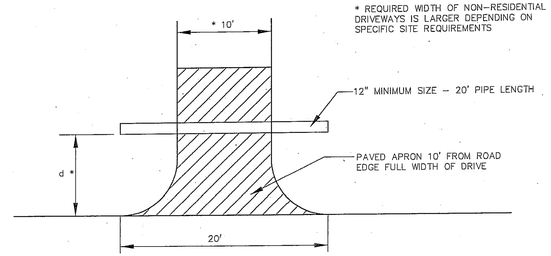

* REQUIRED WIDTH OF NON–RESIDENTIAL DRIVEWAYS IS LARGER DEPENDING ON SPECIFIC SITE REQUIREMENTS

* PIPE SHALL BE PLACED, d, FROM ROAD TO PROVIDE FOR 3:1 SLOPE TO PIPE INVERT FROM THE ROAD EDGE TO AVOID ROADSIDE HAZARD. THIS DISTANCE WILL VARY DEPENDING ON GRADES AT THE ROADSIDE. IF LEVEL AT THE ROADSIDE, THIS DISTANCE IS 5' FEET.

PIPE UNDER DRIVE

NORTHEAST UTILITIES
MANHOLE – PRECAST REINFORCED CONCRETE
6'–0" x 14'–0" x 7'–0" INSIDE
MATERIAL SPECIFICATION
SPC M-031
11

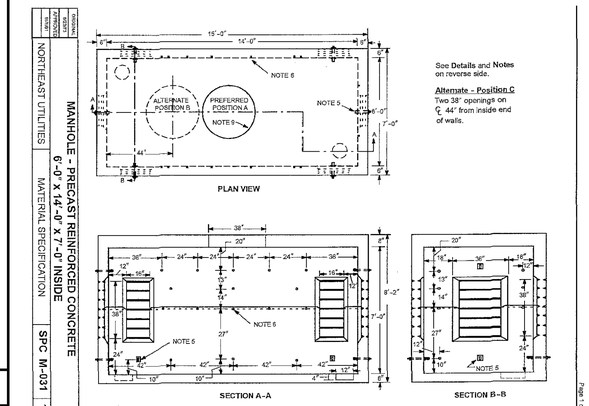

See Details and Notes on reverse side.

Alternate - Position C
Two 38" openings on ℄ 44" from inside end of walls.

PRECAST REINFORCED CONCRETE MANHOLE

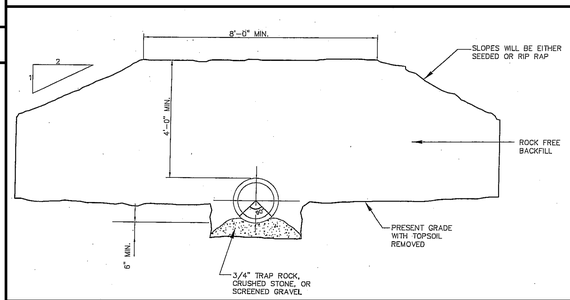

SHALLOW EARTH TRENCH

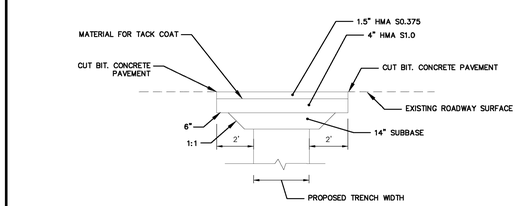

TRENCH REPAIR FOR STORM SEWER

*NOTE: MAKE CONDUIT CORRECTIONS INTO MANHOLE UNDER UTILITY COMPANY SUPERVISION. 4" DUCT IS TO PENETRATE MANHOLE.

MANHOLE PENETRATION

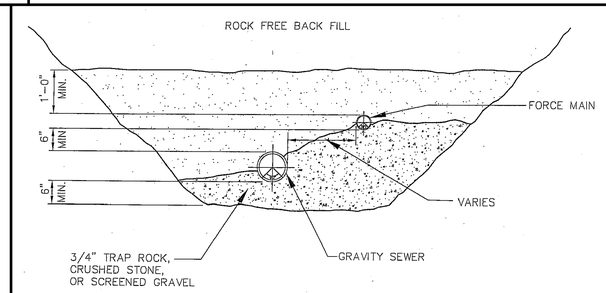

COMBINED GRAVITY SEWER & FORCE MAIN TRENCH

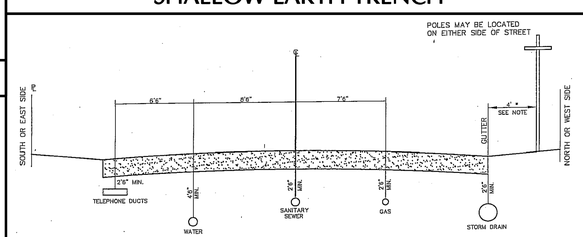

* 1' FOR COLLECTOR STREET WITH 60' R. O. W.

NOTE:
THESE UTILITY LOCATIONS SHALL BE FOLLOWED WHENEVER POSSIBLE

TYPICAL SECTION UTILITY LOCATION

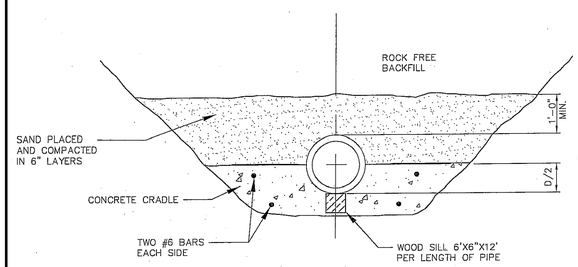

CONCRETE CRADLE

Date	Description	No.

REVISIONS

JOHN D. PLANTE
CT PROFESSIONAL ENGINEER #19399

LANGAN
555 Long Wharf Drive, New Haven, CT 06511
T: 203.562.5771 F: 203.789.6142 www.langan.com
NEW JERSEY NEW YORK CONNECTICUT PENNSYLVANIA OHIO
VIRGINIA WASHINGTON DC FLORIDA NORTH DAKOTA CALIFORNIA
ABU DHABI ATHENS DOHA DUBAI ISTANBUL
Langan Engineering, Environmental, Surveying and Landscape Architecture, D.P.C.
Langan Engineering and Environmental Services, Inc.
Langan CT, Inc.
Langan International LLC
Collectively known as Langan

Project

STORRS CENTER PHASE II

MANSFIELD CONNECTICUT

Drawing Title

UTILITY DETAILS III

Project No. 140105801	Drawing No. CU503
Date 04/03/14	
Scale NTS	
Drawn By HLS	
Checked By CVZ	

© 2014 Langan

PROJECT No. 140105801

LANGAN

Filename: \\langan.com\data\NH\data8\140105801\Cadd Data - 140105801\SheetFiles\140105801-CU501-0101.dwg Date: 4/3/2014 Time: 11:21 User: hsmith Style Table: Langan.stb Layout: CU503

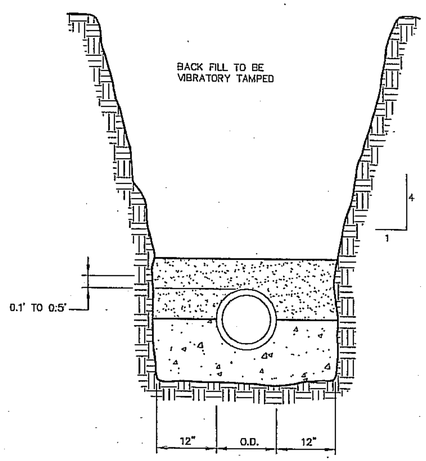

THE STRENGTH OF PIPE REQUIRED BY THIS SPECIFICATION IS DESIGNED TO CARRY THE DEAD AND LIVE LOADS AS CALCULATED AT A POINT ONE-FOOT ABOVE THE TOP OF THE PIPE. WHERE THE SPECIFIED TRENCH WIDTH IS EXCEEDED BY THE OPERATIONS OF THE CONTRACTOR, THE ENGINEER WILL RECHECK THE DESIGN OF THE PIPE.

TYPICAL TRENCH WIDTH

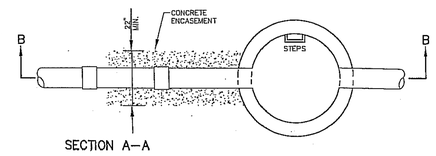

PLAN
N.T.S.

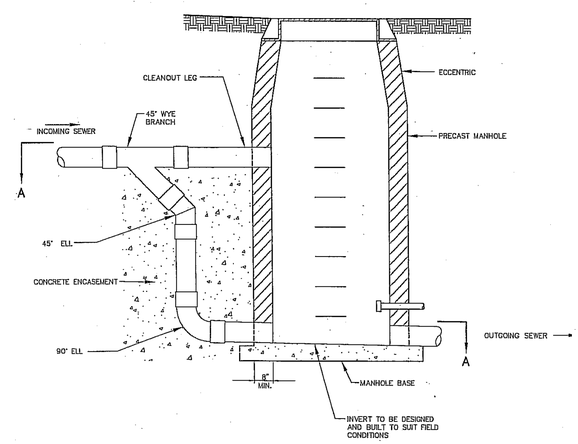

ELEVATION DROP MANHOLE

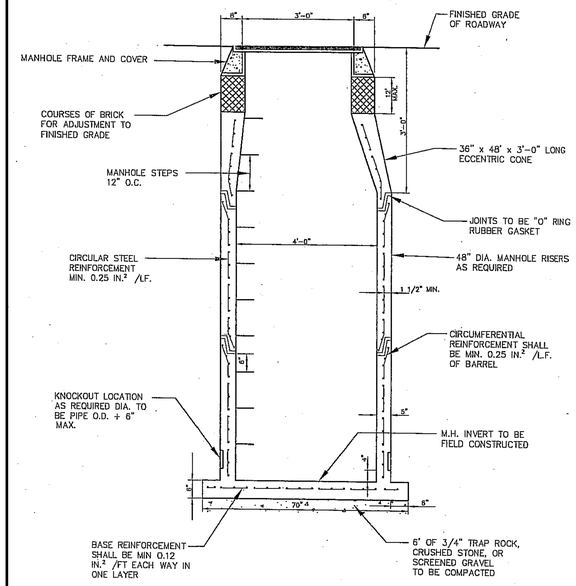

PRECAST MANHOLE

DEFLECTION ANGLE

OFFSET

PIPE DIA. (INCHES)	DEFLECTION ANGLE	OFFSET PER PIPE LENGTH (IN INCHES)		
		1 FT.	6 1/2 FT.	13 FT.
8–12	2 1/2°	.5	3.4	8.8
14–16	2°	.4	2.7	5.4
18–24	1 3/4°	.3	2.4	4.8
30–36	1 1/2°	.3	2.0	4.1

FOR EXAMPLE, FOR 2 DEGREES THE OFFSET FOR EACH FOOT OF LENGTH IS 0.4"– SO A 10 FOOT LENGTH WOULD BE 10 TIMES 0.4, MAKING THE OFFSET 4.0".

MAXIMUM ALLOWABLE DEFLECTION

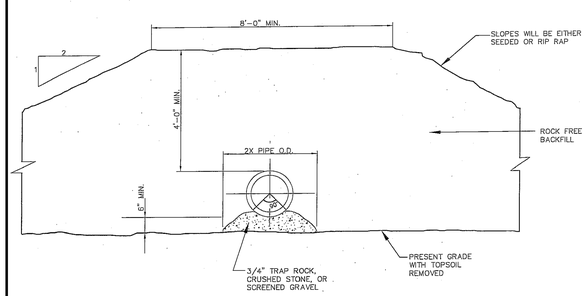

PIPE ABOVE PRESENT GRADE

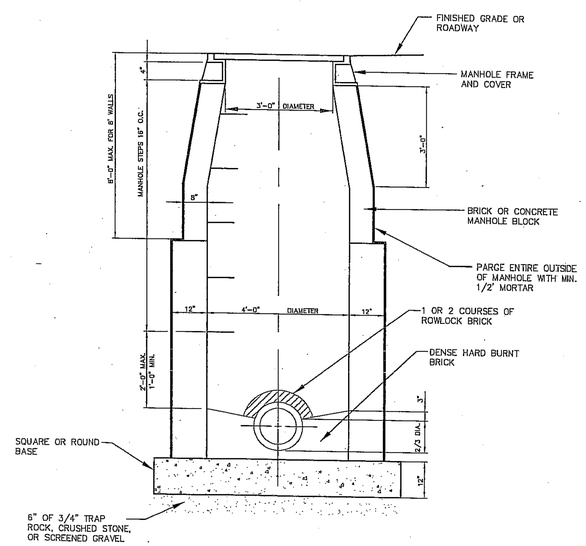

MASONRY MANHOLE

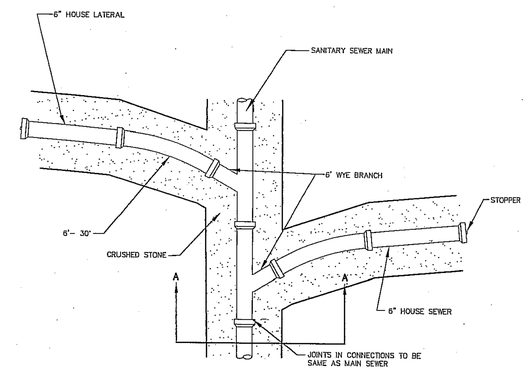

PLAN
N.T.S.

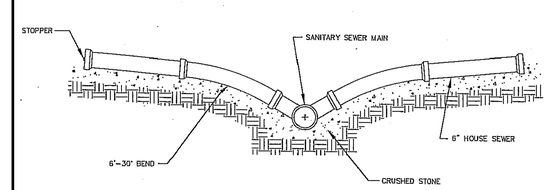

SECTION A – A

SERVICE CONNECTION FOR SHALLOW SERVICE

Date	Description	No.

REVISIONS

JOHN D. PLANTE
CT PROFESSIONAL ENGINEER #19399

LANGAN
555 Long Wharf Drive, New Haven, CT 06511
T: 203.562.5771 F: 203.789.6142 www.langan.com
NEW JERSEY NEW YORK CONNECTICUT PENNSYLVANIA OHIO
VIRGINIA WASHINGTON,DC FLORIDA NORTH DAKOTA CALIFORNIA
ABU DHABI ATHENS DOHA DUBAI ISTANBUL
Langan Engineering, Environmental, Surveying and Landscape Architecture, D.P.C.
Langan Engineering and Environmental Services, Inc.
Langan CT, Inc.
Langan International LLC
Collectively known as Langan

Project

STORRS CENTER
PHASE II

MANSFIELD CONNECTICUT

Drawing Title

UTILITY DETAILS IV

Project No.	Drawing No.
140105801	CU504
Date 04/03/14	
Scale NTS	
Drawn By HLS	
Checked By CVZ	

PROJECT No. 140105801

© 2013 Langan

GENERAL NOTES

1. EXISTING BOUNDARY, TOPOGRAPHIC, AND OWNERSHIP INFORMATION TAKEN FROM PLAN TITLED "PHASE 2 COMPILED BASE MAP" DATED JANUARY 27, 2014, PREPARED BY BL COMPANIES.
2. THE SITE IS LOCATED IN FLOOD ZONE C, AN AREA OF MINIMAL FLOODING PER FIRM MAPS #0901280010C & #0901280005C, EFFECTIVE JANUARY 2, 1981.
3. THE SITE IS LOCATED IN ZONE SC-DD, STORRS CENTER SPECIAL DESIGN DISTRICT.

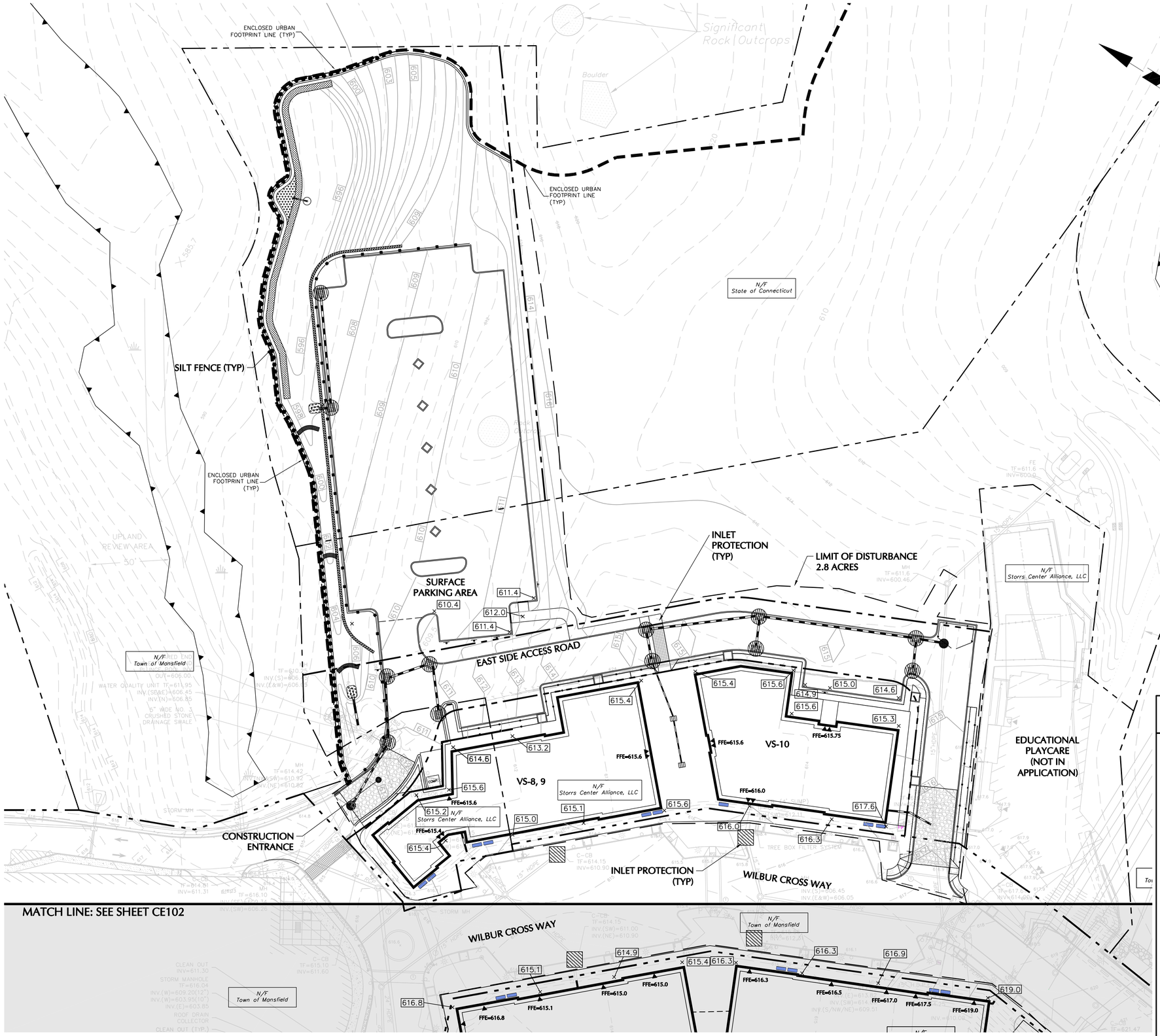

LEGEND

- CONSTRUCTION ENTRANCE
- SILT FENCE
- SOIL TYPE BOUNDARY
- HAYBALES
- LIMIT OF DISTURBANCE
- PROPOSED INLET PROTECTION
- EXISTING INLET PROTECTION

Date	Description	No.
REVISIONS		

JOHN D. PLANTE
CT PROFESSIONAL ENGINEER #19399

LANGAN
555 Long Wharf Drive, New Haven, CT 06511
T: 203.562.5771 F: 203.789.6142 www.langan.com
NEW JERSEY NEW YORK CONNECTICUT PENNSYLVANIA OHIO VIRGINIA WASHINGTON DC FLORIDA NORTH DAKOTA CALIFORNIA ABU DHABI ATHENS DOHA DUBAI ISTANBUL
Langan Engineering, Environmental, Surveying and Landscape Architecture, D.P.C.
Langan Engineering and Environmental Services, Inc.
Langan CT, Inc.
Langan International LLC
Collectively known as Langan

Project
STORRS CENTER PHASE II
MANSFIELD CONNECTICUT

Drawing Title
SOIL EROSION & SEDIMENT CONTROL PLAN EAST

Project No. 140105801	Drawing No. CE101
Date 4/3/14	
Scale 1"=30'	
Drawn By JRM	
Checked By TDO	

PROJECT No. 140105801

©2015 Langan

GENERAL NOTES

1. EXISTING BOUNDARY, TOPOGRAPHIC, AND OWNERSHIP INFORMATION TAKEN FROM PLAN TITLED "PHASE 2 COMPILED BASE MAP" DATED JANUARY 27, 2014, PREPARED BY BL COMPANIES.
2. THE SITE IS LOCATED IN FLOOD ZONE C, AN AREA OF MINIMAL FLOODING PER FIRM MAPS #0901280010C & #0901280005C, EFFECTIVE JANUARY 2, 1981.
3. THE SITE IS LOCATED IN ZONE SC-DD, STORRS CENTER SPECIAL DESIGN DISTRICT.

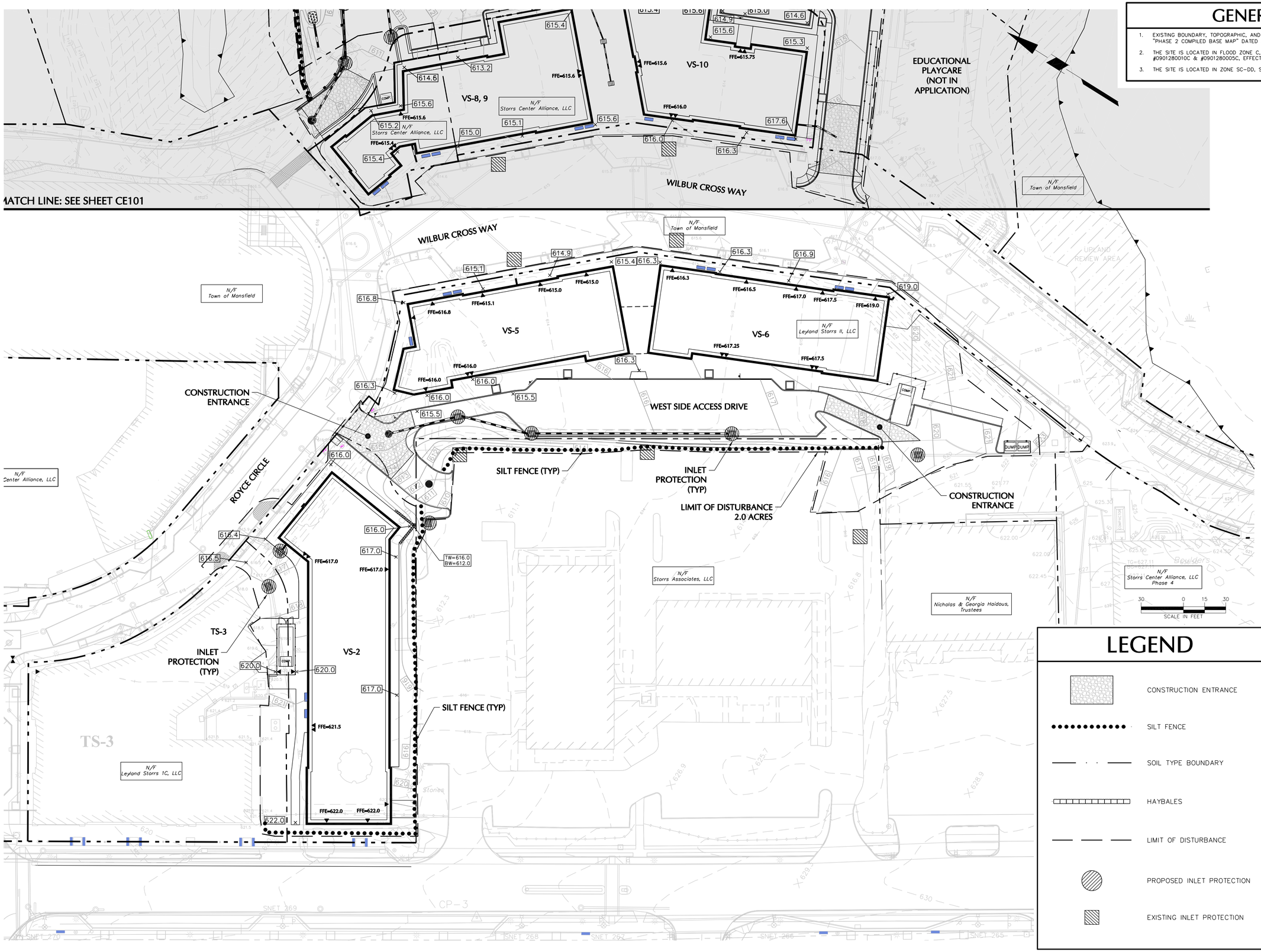

LEGEND

- CONSTRUCTION ENTRANCE
- SILT FENCE
- SOIL TYPE BOUNDARY
- HAYBALES
- LIMIT OF DISTURBANCE
- PROPOSED INLET PROTECTION
- EXISTING INLET PROTECTION

Date	Description	No.

REVISIONS

JOHN D. PLANTE
CT PROFESSIONAL ENGINEER #19399

LANGAN

555 Long Wharf Drive, New Haven, CT 06511
T: 203.562.5771 F: 203.789.6142 www.langan.com

NEW JERSEY NEW YORK CONNECTICUT PENNSYLVANIA OHIO VIRGINIA WASHINGTON DC FLORIDA NORTH DAKOTA CALIFORNIA
ABU DHABI ATHENS DOHA DUBAI ISTANBUL

Langan Engineering, Environmental, Surveying and Landscape Architecture, D.P.C.
Langan Engineering and Environmental Services, Inc.
Langan CT, Inc.
Langan International LLC
Collectively known as Langan

Project

STORRS CENTER PHASE II

MANSFIELD CONNECTICUT

Drawing Title

SOIL EROSION & SEDIMENT CONTROL PLAN WEST

Project No. 140105801	Drawing No. CE102
Date 4/3/14	
Scale 1"=30'	
Drawn By JRM	
Checked By TDO	

PROJECT No. 140105801

© 2014 Langan

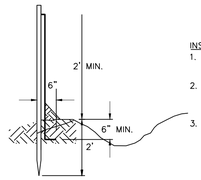

INSTALLATION NOTES:

1. EXCAVATE AND SECURE BOTTOM 6" OF SILT FENCE BELOW GRADE AS SHOWN.
2. EXCEPT FOR THE END POST, DRIVE ALL POSTS INTO THE GROUND AT BACK SIDE OF TRENCH SPACED A MAXIMUM OF 8 FT O. C.
3. SECURE FILTER FABRIC WITH DRAWSTRING TO POST WITH METAL FASTENERS AND REINFORCEMENT BETWEEN FASTENER AND FABRIC.

SILT FENCE

1. NOTIFY ALL APPROPRIATE TOWN DEPARTMENTS PRIOR TO CONSTRUCTION COMMENCEMENT IN ACCORDANCE WITH ALL APPROVALS.
2. PLACE CRUSHED STONE STABILIZED CONSTRUCTION ENTRANCE AND SET UP CONSTRUCTION TRAILERS AND FENCE.
3. INSTALL SEDIMENT FILTER FENCE AND APPROPRIATE INLET PROTECTION.
4. CLEAR, GRUB, STRIP AND STOCKPILE TOPSOIL FROM REMAINING CONSTRUCTION AREA.
5. EXCAVATE SITE CUTS AND PLACE COMPACTED FILLS IN ACCORDANCE WITH THE GRADING PLAN.
6. BEGIN BUILDING FOUNDATION CONSTRUCTION.
7. PLACE 4" TOPSOIL ON COMPLETED EMBANKMENTS, SEED AND STABILIZE.
8. INSTALL STORM DRAINAGE SYSTEM, INCLUDING PIPE AND MANHOLES
9. INSTALL INLET PROTECTION AT ALL NEW INLETS.
10. INSTALL UTILITIES WHERE SHOWN AND WHERE TEMPORARILY NECESSARY.
11. COMPLETE BUILDING FOUNDATION CONSTRUCTION.
12. COMPLETE UNDERGROUND UTILITY CONSTRUCTION.
13. COMPLETE FINAL GRADING.
14. INSTALL BITUMINOUS CONCRETE BASE COURSE.
15. INSTALL CURBING.
16. PLACE LANDSCAPE TREES AND SHRUBS AS NOTED ON THE LANDSCAPE PLAN.
17. INSTALL BITUMINOUS CONCRETE TOP COURSE AND STRIPE.
18. UPON TURF ESTABLISHMENT, REMOVE ALL SOIL EROSION AND SEDIMENT CONTROL MEASURES.
19. FLUSH AND CLEAN STORM DRAINAGE SYSTEM.
20. OBTAIN ALL REQUIRED SIGN-OFFS FROM ALL APPROPRIATE TOWN DEPARTMENTS.
21. END CONSTRUCTION.

SOIL EROSION-SEDIMENT CONTROL NOTES

PROPOSED DEVELOPMENT

1. DEMOLITION DEBRIS AND SOIL REMOVAL RELATED TO CONSTRUCTION SHALL BE REMOVED AND DISPOSED OF IN ACCORDANCE WITH APPLICABLE STATE AND LOCAL LAWS GOVERNING SUCH ACTIVITIES.
2. THE DETAILED EROSION AND SEDIMENT CONTROL MEASURES ARE SHOWN ON DRAWING CE101. PROPOSED MEASURES HAVE BEEN DESIGNED TO PREVENT THE MIGRATION OF SOIL SEDIMENT FROM THE SITE.

SOIL EROSION AND SEDIMENT CONTROL NOTES

1. THE SOIL AND SEDIMENT CONTROL PRACTICES MUST BE INSTALLED IN ACCORDANCE WITH THE LOCAL GOVERNING AUTHORITY AND THE CONNECTICUT COUNCIL ON SOIL AND WATER CONSERVATION AND THE 2002 CONNECTICUT GUIDELINES FOR SOIL EROSION AND SEDIMENT CONTROL.
2. EROSION AND SEDIMENT CONTROL DEVICES MUST BE INSTALLED PRIOR TO START OF DEMOLITION AND CONSTRUCTION AND DISTURBANCE OF SITE CONTRIBUTORY DRAINAGE AREAS. THE OWNER OR ITS CONTRACTOR SHALL INSPECT, REPAIR AND REMOVE ALL SEDIMENT AND EROSION CONTROL DEVICES, AS INDICATED HEREIN.
3. DISPOSAL OF COLLECTED SEDIMENT SHALL BE MADE TO AREA DESIGNATED BY THE OWNER'S SOIL ENGINEER.
4. FILTER FABRIC/SILT FENCE WILL BE INSTALLED ALONG THE TOE OF ALL CRITICAL CUT AND FILL SLOPES.
5. ALL TOPSOIL NOT TO BE USED FOR FINAL GRADING/LANDSCAPED AREAS SHALL BE REMOVED FROM THE SITE IN ACCORDANCE WITH APPLICABLE STATE AND LOCAL LAW. ALL TOPSOIL TO BE USED IN LANDSCAPED AREAS SHALL BE STORED/STOCKPILED IN ACCORDANCE WITH APPLICABLE STATE AND LOCAL LAW STANDARDS.
6. ALL AREAS WITHIN 500 FEET OF AN INHABITED DWELLING SHALL BE WETTED AS NECESSARY TO PROVIDE DUST CONTROL.
7. SEDIMENT DISPOSAL AREAS AND TOPSOIL STOCKPILES NOT SCHEDULED FOR CONSTRUCTION ACTIVITIES WITHIN THIRTY (30) DAYS OF DISTURBANCE SHALL BE STABILIZED AS FOLLOWS:
   A. ANNUAL RYE GRASS SEEDING APPLIED AT A RATE OF NOT LESS THAN 5 LB. PER 1,000 SF.
   B. MULCH ALL NEWLY SEEDED AREAS WITHIN 80 LBS. OF SALT HAY OR SMALL GRAIN STRAW PER 1,000 SF.
8. BETWEEN OCTOBER 15 AND MARCH 15, WHEN DISTURBED AREAS ARE SCHEDULED FOR IMMEDIATE LANDSCAPING, THEY MAY BE MULCHED AND SEEDED PER ITEM ABOVE.
9. THE CONTRACTOR IS RESPONSIBLE FOR ALL PAVED ROADWAYS, ON AND OFF-SITE, WHICH MUST BE KEPT FREE OF SITE GENERATED SEDIMENT AT ALL TIMES. DUST SHALL BE CONTROLLED BY SPRINKLING OR OTHER APPROVED METHOD.
10. ALL STORM DRAINAGE OUTLETS MUST BE STABILIZED, AS REQUIRED, BEFORE THE DISCHARGE POINTS BECOME OPERATIONAL.
11. SILT FENCES AND BARRIERS MUST BE CLEANED OR REPLACED PERIODICALLY TO REMOVE BUILT-UP SILT.
12. SEDIMENT TRAPS MUST BE CLEANED WHEN CAPACITY HAS BEEN REDUCED BY AN AVERAGE OF 2'-0" OVER ITS TOTAL AREA OR TO 70% OF ITS DESIGN VOLUMES, WHICHEVER OCCURS FIRST.
13. ALL EROSION AND SEDIMENT CONTROL DEVICES MUST BE INSPECTED ON A DAILY BASIS AND CLEANED WHEN 50% CAPACITY IS REACHED.
14. ALL EXPOSED SURFACES WILL BE TREATED WITH 6" OF TOPSOIL PRIOR TO FINAL STABILIZATION.
15. PERMANENT VEGETATION IS TO BE SEEDED OR SODDED ON ALL EXPOSED AREAS WITHIN TEN (10) DAYS AFTER FINAL GRADING. MULCH AS NECESSARY FOR SEED PROTECTION AND ESTABLISHMENT. LIME AND FERTILIZE PRIOR TO PERMANENT SEEDING.
16. SOIL EROSION AND SEDIMENT CONTROL SHALL INCLUDE, BUT NOT BE LIMITED TO, OMISSIONS, ERRORS, OR FIELD OPERATIONS IMMEDIATELY AND IN ACCORDANCE WITH THE ABOVE MEASURES. THE CONTRACTOR SHALL BE RESPONSIBLE TO CORRECT ANY OMISSIONS, ERRORS, OR FIELD OPERATIONS IMMEDIATELY AND IN ACCORDANCE WITH THE GUIDELINES FOR SOIL EROSION AND SEDIMENT CONTROL.
17. ANY CONVEYANCE OF THIS PROJECT PRIOR TO ITS COMPLETION WILL TRANSFER FULL RESPONSIBILITY FOR COMPLIANCE WITH THE CERTIFIED PLAN TO ANY SUBSEQUENT OWNERS.

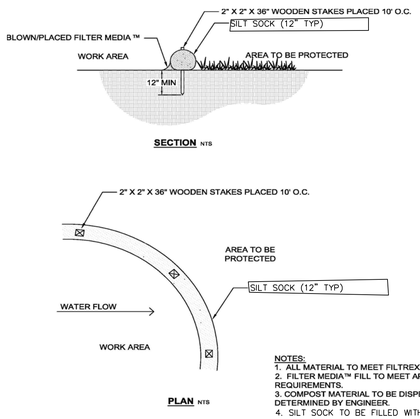

NOTES:
1. ALL MATERIAL TO MEET FILTREXX® SPECIFICATIONS
2. FILTER MEDIA™ FILL TO MEET APPLICATION REQUIREMENTS.
3. COMPOST MATERIAL TO BE DISPERSED ON SITE, AS DETERMINED BY ENGINEER.
4. SILT SOCK TO BE FILLED WITH COMPOST MATERIAL.

SILT SOCK

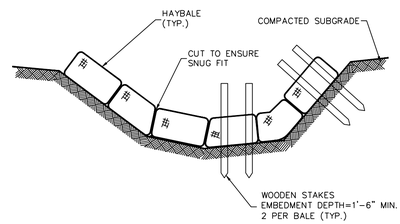

NOTES:
1) HAYBALES MUST BE MAINTAINED PER SESC NOTES.

HAYBALE PROTECTION

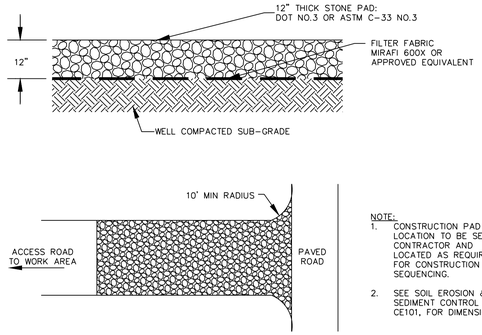

NOTE:
1. CONSTRUCTION PAD LOCATION TO BE SET BY CONTRACTOR AND LOCATED AS REQUIRED FOR CONSTRUCTION SEQUENCING.
2. SEE SOIL EROSION & SEDIMENT CONTROL PLAN, CE101, FOR DIMENSIONS.

STABILIZED CONSTRUCTION PAD

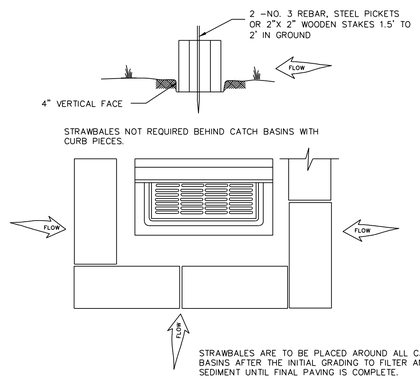

STRAWBALES ARE TO BE PLACED AROUND ALL CATCH BASINS AFTER THE INITIAL GRADING TO FILTER AND DIVERT SEDIMENT UNTIL FINAL PAVING IS COMPLETE.

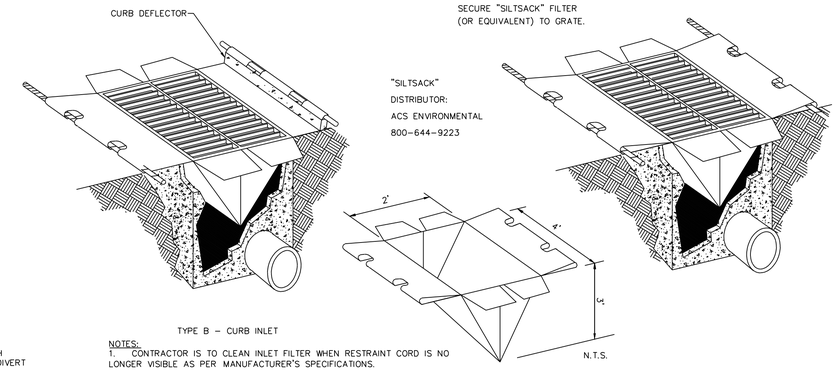

TYPE B - CURB INLET

NOTES:
1. CONTRACTOR IS TO CLEAN INLET FILTER WHEN RESTRAINT CORD IS NO LONGER VISIBLE AS PER MANUFACTURER'S SPECIFICATIONS.
2. CONTRACTOR TO REMOVE FILTER JUST PRIOR TO PAVING.

INLET PROTECTION

Date	Description	No.

REVISIONS

JOHN D. PLANTE
CT PROFESSIONAL ENGINEER #19399

LANGAN
555 Long Wharf Drive, New Haven, CT 06511
T: 203.562.5771 F: 203.789.6142 www.langan.com
NEW JERSEY NEW YORK CONNECTICUT PENNSYLVANIA OHIO VIRGINIA WASHINGTON DC FLORIDA NORTH DAKOTA CALIFORNIA
ABU DHABI ATHENS DOHA DUBAI ISTANBUL
Langan Engineering, Environmental, Surveying and Landscape Architecture, D.P.C.
Langan Engineering and Environmental Services, Inc.
Langan CT, Inc.
Langan International LLC
Collectively known as Langan

Project

STORRS CENTER PHASE II

MANSFIELD CONNECTICUT

Drawing Title

SOIL EROSION & SEDIMENT CONTROL NOTES & DETAILS

Project No. 140105801	Drawing No. CE501
Date 04/03/14	
Scale NTS	
Drawn By HLS	
Checked By CVZ	

PROJECT No. 140105801

© 2013 Langan

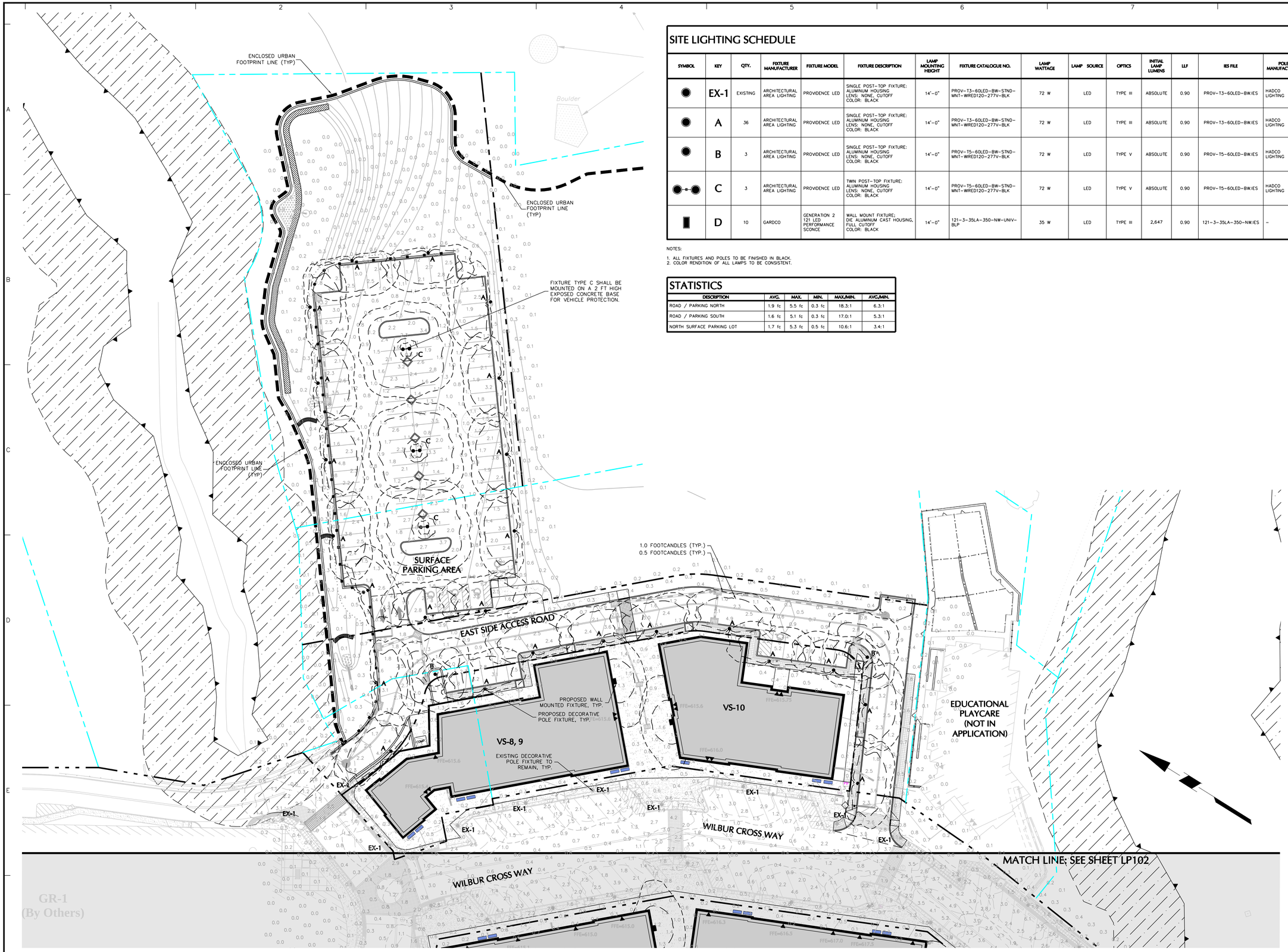

SITE LIGHTING SCHEDULE

SYMBOL	KEY	QTY.	FIXTURE MANUFACTURER	FIXTURE MODEL	FIXTURE DESCRIPTION	LAMP MOUNTING HEIGHT	FIXTURE CATALOGUE NO.	LAMP WATTAGE	LAMP SOURCE	OPTICS	INITIAL LAMP LUMENS	LLF	IES FILE	POLE MANUFACTURER	POLE DESCRIPTION	POLE CATALOGUE NO.	REMARKS
	EX-1	EXISTING	ARCHITECTURAL AREA LIGHTING	PROVIDENCE LED	SINGLE POST-TOP FIXTURE; ALUMINUM HOUSING LENS: NONE, CUTOFF COLOR: BLACK	14'-0"	PROV-T3-60LED-BW-STND-MNT-WRED120-277V-BLK	72 W	LED	TYPE III	ABSOLUTE	0.90	PROV-T3-60LED-BW.IES	HADCO LIGHTING	LENGTH: 12'-0" DECORATIVE ROUND ALUMINUM COLOR: BLACK	POLE: EXISTING	EXISTING
	A	36	ARCHITECTURAL AREA LIGHTING	PROVIDENCE LED	SINGLE POST-TOP FIXTURE; ALUMINUM HOUSING LENS: NONE, CUTOFF COLOR: BLACK	14'-0"	PROV-T3-60LED-BW-STND-MNT-WRED120-277V-BLK	72 W	LED	TYPE III	ABSOLUTE	0.90	PROV-T3-60LED-BW.IES	HADCO LIGHTING	LENGTH: 12'-0" DECORATIVE ROUND ALUMINUM COLOR: BLACK	POLE: WASHINGTON P649-W1N22-4000	TO MATCH EXISTING. COORDINATE WITH REPRESENTATIVE ON EXACT SPECIFICATIONS
	B	3	ARCHITECTURAL AREA LIGHTING	PROVIDENCE LED	SINGLE POST-TOP FIXTURE; ALUMINUM HOUSING LENS: NONE, CUTOFF COLOR: BLACK	14'-0"	PROV-T5-60LED-BW-STND-MNT-WRED120-277V-BLK	72 W	LED	TYPE V	ABSOLUTE	0.90	PROV-T5-60LED-BW.IES	HADCO LIGHTING	LENGTH: 12'-0" DECORATIVE ROUND ALUMINUM COLOR: BLACK	–	TO MATCH EXISTING. COORDINATE WITH REPRESENTATIVE ON EXACT SPECIFICATIONS
	C	3	ARCHITECTURAL AREA LIGHTING	PROVIDENCE LED	TWIN POST-TOP FIXTURE; ALUMINUM HOUSING LENS: NONE, CUTOFF COLOR: BLACK	14'-0"	PROV-T5-60LED-BW-STND-MNT-WRED120-277V-BLK	72 W	LED	TYPE V	ABSOLUTE	0.90	PROV-T5-60LED-BW.IES	HADCO LIGHTING	LENGTH: 12'-0" DECORATIVE ROUND ALUMINUM COLOR: BLACK	–	TO MATCH EXISTING. COORDINATE WITH REPRESENTATIVE ON EXACT SPECIFICATIONS
	D	10	GARDCO	GENERATION 2 121 LED PERFORMANCE SCONCE	WALL MOUNT FIXTURE; DIE ALUMINUM CAST HOUSING, FULL CUTOFF COLOR: BLACK	14'-0"	121-3-35LA-350-NW-UNIV-BLP	35 W	LED	TYPE III	2,647	0.90	121-3-35LA-350-NW.IES	–	–	–	–

NOTES:

1. ALL FIXTURES AND POLES TO BE FINISHED IN BLACK.
2. COLOR RENDITION OF ALL LAMPS TO BE CONSISTENT.

STATISTICS

DESCRIPTION	AVG.	MAX.	MIN.	MAX./MIN.	AVG./MIN.
ROAD / PARKING NORTH	1.9 fc	5.5 fc	0.3 fc	18.3:1	6.3:1
ROAD / PARKING SOUTH	1.6 fc	5.1 fc	0.3 fc	17.0:1	5.3:1
NORTH SURFACE PARKING LOT	1.7 fc	5.3 fc	0.5 fc	10.6:1	3.4:1

REFER TO SHEET LL-501 FOR LIGHTING NOTES AND DETAILS.

NOT FOR CONSTRUCTION

SCALE IN FEET: 30 0 15 30

Date	Description	No.

REVISIONS

STATE OF CONNECTICUT · STATE O. SPECTOR · 1174 · LICENSED LANDSCAPE ARCHITECT

JAYNE O. SPECTOR
LICENSED LANDSCAPE ARCHITECT
STATE OF CONNECTICUT – #1174

LANGAN
555 Long Wharf Drive, New Haven, CT 06511
T: 203.562.5771 F: 203.789.6142 www.langan.com
NEW JERSEY NEW YORK CONNECTICUT PENNSYLVANIA OHIO VIRGINIA WASHINGTON DC FLORIDA NORTH DAKOTA CALIFORNIA
ABU DHABI ATHENS DOHA DUBAI ISTANBUL
Langan Engineering, Environmental, Surveying and Landscape Architecture, D.P.C.
Langan Engineering and Environmental Services, Inc.
Langan CT, Inc.
Langan International LLC
Collectively known as Langan

Project

STORRS CENTER PHASE II

MANSFIELD CONNECTICUT

Drawing Title

LIGHTING PLAN EAST

Project No.	Drawing No.
140105801	LL101
Date: 4/3/14	
Scale: 1"=30'	
Drawn By: DS	
Checked By: MH	

LANGAN

PROJECT No. 140105801

© 2014 Langan